S. T. WALKUP.

CONTROLLER FOR POWER OPERATED MECHANISM.

APPLICATION FILED MAR. 27, 1908.

1,135,416.

Patented Apr. 13, 1915.

2 SHEETS—SHEET 1.

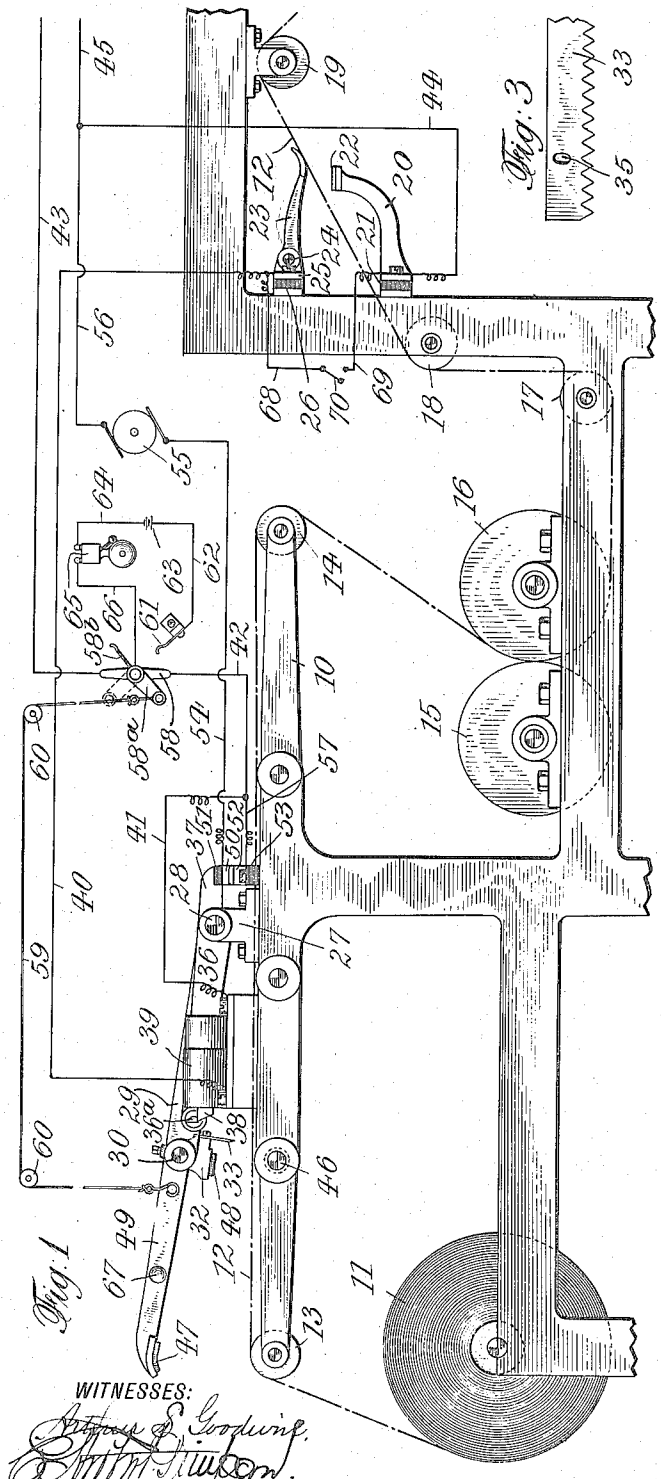

Fig. 1

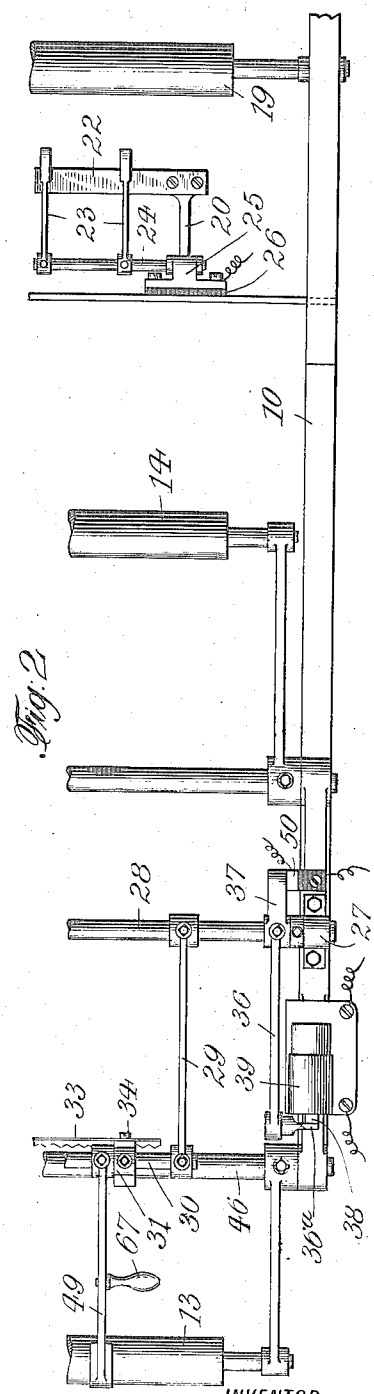

Fig. 2

Fig. 3

WITNESSES:

Arthur E. Goodwine.

Wm. M. Simpson.

INVENTOR

Samuel Thomas Walkup

BY

Amon L. Squiers

ATTORNEYS

S. T. WALKUP.

CONTROLLER FOR POWER OPERATED MECHANISM.

APPLICATION FILED MAR. 27, 1908.

1,135,416. Patented Apr. 13, 1915.

2 SHEETS—SHEET 2.

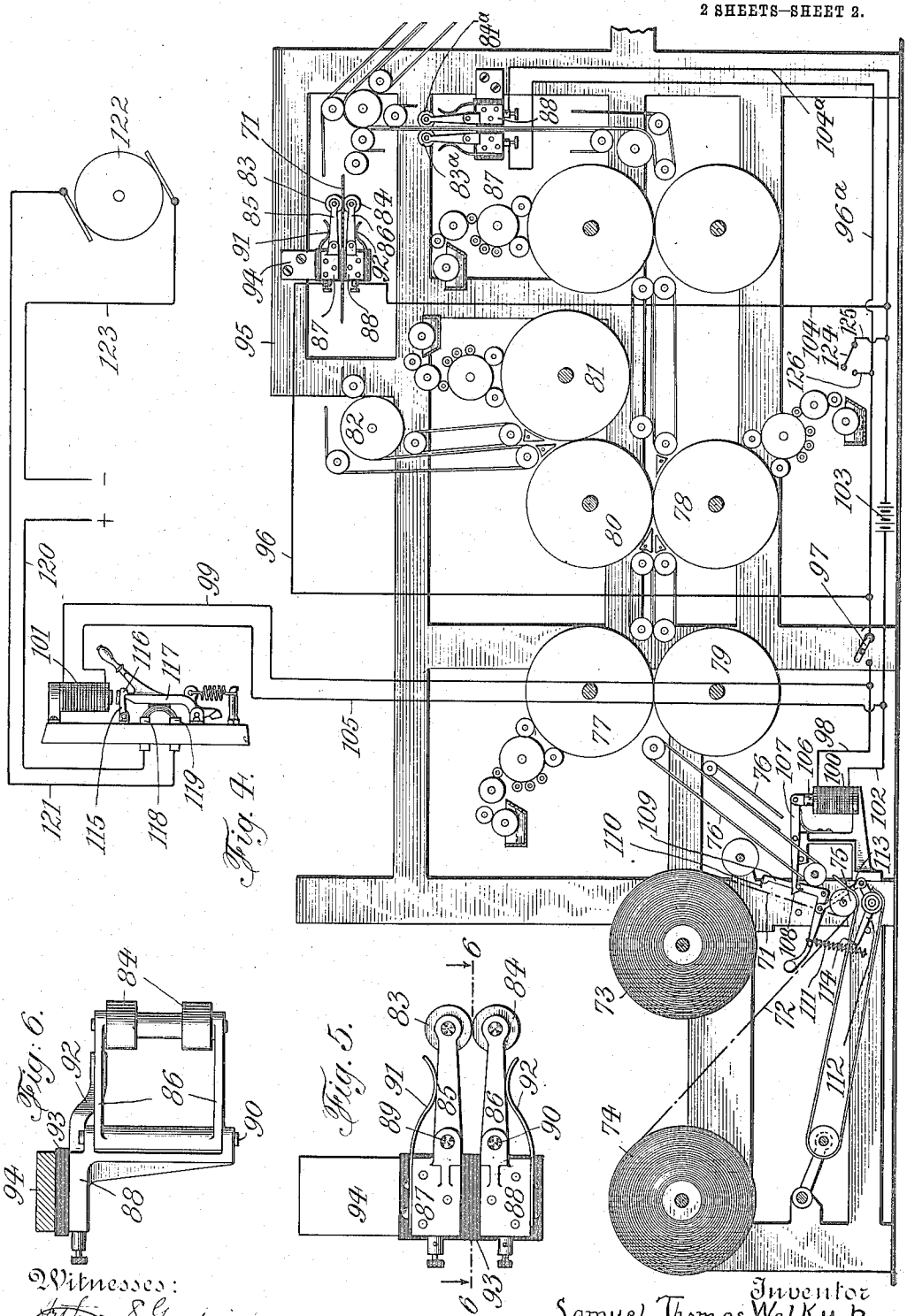

Witnesses:

Arthur S. Goodwin.

[illegible]

Inventor

Samuel Thomas Walkup

By his Attorney

Amon L. Squiers

UNITED STATES PATENT OFFICE.

SAMUEL THOMAS WALKUP, OF NEW YORK, N. Y.

CONTROLLER FOR POWER-OPERATED MECHANISM.

1,135,416. Specification of Letters Patent. Patented Apr. 13, 1915.

Application filed March 27, 1908. Serial No. 423,675.

To all whom it may concern:

Be it known that I, SAMUEL THOMAS WALKUP, a citizen of the United States, residing at New York city, Manhattan, county and State of New York, have invented new and useful Improvements in Controllers for Power-Operated Mechanism, of which the following is a specification.

My invention is particularly adapted for printing press attachments for preventing the "snowing up" or choking of the paper web, and for automatically stopping the press when the web is severed. By such an application of my invention, automatic web cutting and press stopping devices can be provided, whereby said devices are always ready to act to stop the press as soon as the web is cut or broken, or to instantly cause the severing device to cut the web, and thus cause the press to stop whenever the advancing web becomes broken or divided beyond said cutting device. Serious waste of time and paper is thus effectually prevented, when choking or snowing up of the web occurs by reason of a break in the running web and the probable injury to the press mechanism.

In the accompanying drawings, I have illustrated my invention as applied to a printing press, and provide a pair of electric contacts arranged preferably on opposite sides of the web's run and separated from each other by the web during the normal operation of the machine. When a break or severing of the web occurs, these contacts will touch each other to close a circuit, by means of which a cutter for severing the web at the desired point is actuated, and the press is stopped. I also provide an electric alarm to be automatically operated upon the completion of the circuit to stop the press. I also provide means for clamping the free edge of the unreeled portion of the web to prevent an objectionable loosening or unwinding of the same and to hold the web in position for the subsequent starting of the machine.

In the accompanying drawings: Figure 1 is a diagrammatic side elevation of part of a rotary printing press, with my invention applied thereto; Fig. 2 is a plan, partly broken away, of the upper part of the apparatus shown in Fig. 1; Fig. 3 is a detail of part of the cutter; Fig. 4 is a diagrammatic side elevation, partly in section, of a printing press having a slightly different form of my invention to that shown in the preceding figures applied thereto; Fig. 5 is a side elevation, enlarged, of the contact rollers shown in Fig. 4, and Fig. 6 is a section on line 6—6, Fig. 5.

In the frame 10 of a rotary printing press is journaled the usual paper or web supply roll 11. The web 12 passes from roll 11 over guide rolls 13, 14, between type-cylinder 15 and impression-cylinder 16, and thence over guide rolls 17, 18 and 19, to the folding device, (not shown).

At a suitable point, preferably in front of cylinder 16 and intermediate rolls 18, 19, there is secured to frame 10, below run of web 12, a rigid metallic arm 20 insulated from frame 10 as at 21. To the free end of arm 20 is secured a transverse contact bar 22 which is adapted to be engaged by one or more contact fingers 23 arranged above run of web 12. Fingers 23 are mounted on a shaft or spindle 24 journaled in a bearing 25 which is secured to frame 10 and insulated therefrom as at 26. The parts 22 and 23 are so positioned that the web clears bar 22 during its normal run through the press, while fingers 23 ride upon the web. Whenever a break of the web occurs during its transit through the machine, the severed front section of the web will be drawn out from between contact 22 and fingers 23, so that the latter will descend by gravity to engage bar 22 and close an electric circuit. This circuit is utilized to actuate a cutter which severs the reeled off portion of the web from the unreeled portion thereof, and the cutter is, in turn, utilized to stop the press and sound an alarm. Also means are provided for re-starting the press without removing the fingers 23 from contact 22. I prefer to mount several fingers 23 upon the same shaft 24 so that no matter what may be the width of the web passing below the fingers, there will always be a finger 23 to rest on the web and which is raised by the same until severed to keep the circuit broken, and so that when the web is severed, the fingers 23 will be caused to fall upon the contact 22.

The construction of the cutter is as follows: Within bearings 27 of frame 10 is journaled a rock-shaft 28, to which are rigidly connected a pair of arms 29. These arms carry a transverse bar 30 which is provided with a pair of adjustable collars 31. Each collar 31 has a lower extension 32 to

which a serrated cutting blade 33 is secured by screw 34 passing through a slot 35 of such blade and thus permitting a vertical adjustment of the latter. Cutter 33 extends at a suitable distance in front of supply roll 11, across web 12, and is normally held at a slight elevation above such web by a two-arm lever 36, 37 clamped to rock-shaft 28 and provided at the free end of arm 36 with a lateral projection 36ª. This projection is adapted to rest upon the protruding end of the core 38 of a solenoid 39, said core being normally pressed outward by a spring (not shown). Solenoid 39 is connected by wire 40 to insulated bearing 25 of contact 23, and by wires 41, 42, switch lever 58, and wire 43, to one pole of a suitable source of electricity, (not shown). The outer pole of this source is, by wires 45, 44 connected to arm 20 of contact 22. Switch 58 has an arm 58ª, to which is secured a cord 59 running over idlers 60 and hooked to arm 49.

It will be seen that during the normal operation of the press, parts 22 and 23 are held apart by the intervening web 12, which thus constitutes a circuit breaker. When the web tears or breaks, the tail end of its front portion will quickly clear the contacts, so that fingers 23 will, by gravity, engage bar 22 and close an electric circuit, the current flowing as follows: From the source of electricity through wires 45, 44, arm 20, contacts 22, 23, shaft 24, bearing 25, wire 40, solenoid 39, wires 41, 42, switch lever 58, and wire 43, back to the source of electricity. Solenoid 39 will thus be energized to draw core 38 inward and out of engagement with projection 36ª, so that the latter loses its support and will drop. In this way rock-shaft 28 is released and permits cutter 33 to descend by gravity and sever that part of the web which is lodged in the press from the reeled portion of the web. Simultaneously with this operation the free end of the web on the reel is pressed against guide roll 13 and a cross bar 46 of the frame 10, by means of a clamp consisting preferably of a pair of resilient pads 47, 48. Of these, pad 47 is carried by an arm 49 secured to transverse bar 30, while pad 48 is secured to extension 32 of collar 31. The pads are so positioned that when cutter 33 has severed the web, they will firmly hold the free end of the unreeled part of the web against roll 13 and bar 46, to prevent unwinding. The descent of arm 49 further causes, by cord 59, the lever arm 58ª, to be thrown into the position shown in dotted lines in Fig. 1, so as to swing switch lever 58 out of contact with wires 42 and 43. In this way the supply of electric current to solenoid 39 is interrupted and the spring-influenced core 38 will return to its normal position.

It is obvious that if the switch 58 is open the contacts 22, 23 cannot close the circuit through the motor, and equally evident that if the switch 70 is closed all the current will not pass through the contacts 22, 23, and that while 70 is closed the motor circuit may be made and broken at will by raising and lowering the lever 49 by means of the handle 67.

Front arm 37 of lever 36, 37, is provided with a contact-piece 50 insulated from said arm as at 51. This contact-piece engages a second contact-piece 52 when cutter 33 is raised, *i. e.*, when projection 36ª, is supported upon core 38. Contact-piece 52 is secured to frame 10 and is insulated therefrom as at 53. Contact 50 is, by wire 54, connected to the electromotor 55 operating the press and diagrammatically shown in Fig. 1. Electromotor 55 is, by wire 56, connected to wire 45, while contact 52 is, by wire 57, connected to wire 42 at a point beyond lever 58.

It will thus be seen that during the normal operation of the press, electromotor 55 receives its current through closed contact 50, 52. When, however, the web breaks and cutter 33 descends, arm 37 tilts upward, so that contact 50 clears contact 52 and thereby opens the circuit which previously operated electromotor 55. In this way the press is automatically arrested whenever the web breaks.

The means for sounding an alarm, when a break of the web occurs, are preferably connected to switch lever 58, so as to be operated simultaneously with the descent of the paper severing means. For this purpose, lever 58 is provided with an additional arm 58ᵇ, adapted to engage a contact 61 connected by wire 62 to a battery 63, which is, (in turn, connected by wire 64 to an electric alarm 65. The latter is, by wire 66, connected to lever 58. Whenever lever 58 is caused to tilt by a break of the web, arm 58ᵇ, is swung into engagement with contact 61, thereby closing a circuit which will sound alarm 65.

The press and other mechanism may be restarted by raising the arm 49 by a handle 67 until core 38 passes under projection 36ª, and the contacts 50, 52, and 58, are closed through electromotor 55, when the web may be re-threaded.

It is obvious that additional sets of contacts 22 and 23 may be interpolated at different points of the press, which may all be connected to the same solenoid 39. It is also preferred to provide an additional hand-operated switch 70 for solenoid 39, that will enable the attendant to cut the web and stop the press whenever the web becomes partly broken, is defective, swerves, etc. This switch is, by wires 68, 69, connected to bearing 25 and arm 20 respectively, so that when the switch is manually closed, the same effect is obtained as when contacts 22, 23 touch each other through a

breaking of the web. The hand switch should also be used when it is desired to sever the web close to the core and to stop the press when the web on the roll is about to be exhausted.

In the modification shown in Figs. 4 to 6 a press is shown provided with two webs 71 and 72, which are simultaneously printed. These webs pass respectively from supply rolls 73, 74, under roll 75, and are guided by tapes or aprons 76 toward two pair of type-cylinders 77, 78, and impression-cylinders 79, 80. Upper web 71 then passes between impression-cylinder 80 and type-cylinder 81, over idler 82 and between a pair of contact rollers 83 and 84, to be finally conducted toward the folding means, (not shown). Rollers 83 and 84 are journaled respectively in arms 85, 86, pivoted to brackets 87, 88, as at 89, 90, and pressed toward each other by springs 91, 92. Brackets 87, 88 are, by insulating blocks 93, connected to an extension 94 of press-frame 95. It will thus be seen that during the normal operation of the machine, web 71 will prevent a direct contact between rollers 83 and 84, while, when the web breaks, such rollers will come into engagement, to thereby close an electric circuit. Lower web 72 passes, in like manner, between a pair of contact rollers 83^a, and 84^a, which operate, in all respects, similar to rollers 83, 84.

Brackets 87 of contact rollers 83 and 83^a are, by wires 96, 96^a, connected to a switch 97, which is, in turn by wires 98 and 99, connected to a solenoid 100 and an electro-magnet 101, of which the former actuates the web severing means, while the latter arrests the motor operating the press. Solenoid 100 is, by wire 102, connected to a battery 103 which, by wires 104 and 104^a, is connected to brackets 88 of contact rollers 84 and 84^a, respectively. Electro-magnet 101 is, by wire 105, connected to wire 102.

To core 106 of solenoid 100 is pivoted a spring-influenced lever 107 provided with a beak 108 adapted to engage a pin of a bell crank lever 109. One arm of this lever is provided with a cutting edge 110 adapted to sever upper web 71, while its other arm, which is influenced by spring 111, is, by link 113, connected to a lever 112 having cutting edge 114 which is adapted to sever lower web 72. Whenever one of the webs 71, 72, breaks, either the rollers 83, 84, or the rollers 83^a, 84^a, will, by coming into contact with each other, close a circuit which will energize solenoid 100, to thereby withdraw hook 108 from engagement with lever 109. Spring 111 will now tilt levers 109, and 112, to bring cutters 110, 114 into engagement with webs 71, 72, respectively and thereby sever the unreeled portions thereof from the reeled portions.

The electromagnet 101 is provided with a pivoted armature 115, having a hook 116 which normally engages a spring-influenced switch lever 117. This switch lever, when closed, completes a circuit from a generator through a pair of contacts 118 and 119, by wire 120, and thence through wire 121, through the electromotor 122 which operates the press, and thence by wire 123 to the other pole of the generator.

It will thus be seen that simultaneously with solenoid 100, electro-magnet 101 will be energized to attract its armature 115 and thereby release lever 117 which will thus open contacts 118, 119. In this way the current for the electromotor 122 will be interrupted to arrest the press.

A hand switch 124 which is, by wires 125, 126, connected to wires 104^a, and 96^a, respectively, enables the attendant to sever the webs and arrest motor 122, whenever desired.

By the construction described, effective means are provided which will sever the reeled off portion from the remainder of the web, and which will simultaneously stop the press whenever a break in the web occurs. In this way the rollers and cylinders of the press are prevented from being "snowed up" by the web, and all damages resulting from any choking up of the press with the uncontrolled web are avoided.

I claim:

1. In a controller for web feeding mechanism of printing presses and the like, means for severing the web before it reaches the printing devices, and electrically controlled means adapted to cause the severing means to cut the web when the web breaks beyond said severing means.

2. In a controller for web feeding mechanism of printing presses and the like, means for severing the web before it reaches the printing devices, and electrically controlled means adapted to cause the severing means to cut the web, and to stop the operation of the feeding means, when the web breaks beyond said severing means.

3. In a controller for web feeding mechanism of printing presses and the like, means for severing the web before it reaches the printing devices, electric means for causing the operation of said severing means, and a circuit breaker connected with said electrical means for causing the same to operate when the web breaks beyond the latter.

4. In a controller for web feeding mechanism of printing presses and the like, means for severing the web before it reaches the printing devices, electric means for causing the operation of said severing means, and a circuit breaker connected with said electrical means for causing the same to operate and to stop the operation of the feeding means, when the web breaks beyond the latter.

5. In a controller for web feeding mecha-

nism of printing presses and the like, the combination with web severing means, of means for holding the end of the uncut portion of the web, and electric means actuated by a break in the web, for causing the operation of the severing and holding means.

6. In a controller for web feeding mechanism for printing presses and the like, the combination with a web severing device, of means for holding the end of the uncut portion of the web, and electric means operated by a break in the web for causing substantially simultaneous action of the severing and holding devices.

7. In a controller for web feeding mechanism of printing presses and the like, means for severing the web before it reaches the printing devices, electric means for causing the operation of said severing means, two contacts adapted to be separated by the feeding web and connected with said electrical means for causing the same to bring the severing means into action when the web breaks beyond the latter.

8. In a controller for web feeding mechanism of printing presses and the like, means for severing the web before it reaches the printing devices, electric means for causing the operation of said severing means, two contacts adapted to be separated by the feeding web and connected with said electrical means for causing the same to bring the severing means into action, and to stop the operation of the feeding means, when the web breaks beyond the severing devices.

9. In a controller for web feeding mechanism of printing presses and the like, electric contacts adapted to engage with each other upon the withdrawal of the web, and means controlled by the circuit including said contacts for severing the web and simultaneously holding the end of the uncut portion of the web, substantially as specified.

10. In a controller for web feeding mechanism of printing presses and the like, electric contacts adapted to engage with each other upon the severing or withdrawal of the web from the same, means for severing the web controlled by the circuit including said contacts, and electrically controlled means for indicating said severing or withdrawal of the web.

11. In a controller for web feeding mechanism of printing presses and the like, electric contacts adapted to engage with each other upon the severing or withdrawal of the web from the same, means for severing the web controlled by the circuit including said contacts, and electrically controlled means for stopping the feeding devices upon the completion of said circuit.

12. In a controller for web feeding mechanism of printing presses and the like, electric contacts adapted to engage with each other upon the severing or withdrawal of the web from the same, and means controlled by the circuit including said contacts for severing the web and clamping the end of the uncut portion of the web.

13. In a controller for web feeding mechanism of printing presses and the like, electric contacts adapted to engage with each other upon the severing or withdrawal of the web from the same, means for severing the web controlled by the circuit including said contacts, a circuit connected with the motor for operating the feeding devices, and a circuit breaker in said circuit adapted to be operated to break the circuit by the operation of the web severing means.

14. In a controller for web feeding mechanism of printing presses or the like, electric contacts adapted to engage with each other upon the withdrawal of the web, an electromagnet in circuit with the contacts, and paper severing means operably connected with said magnet, and a circuit breaker located between said contacts and magnet whereby engagement of said contacts may be made ineffective.

15. In a controller for web feeding mechanism of printing presses and the like, in combination, means for operating the press, means for severing the web before it reaches the printing devices, automatic electric devices for causing the severing devices to act whenever predetermined conditions arise, and operator controlled electric devices for causing the severing devices to act at any desired time.

16. In a controller for web feeding mechanism for printing presses and the like, in combination, press operating means, web severing means, automatic electric devices controlling the web severing means under usual service conditions, and manually operable electric devices for at will stopping the press and causing the operation of the severing means.

17. In a controller for web feeding mechanism for printing presses and the like, in combination, press operating means, web severing means, automatic devices for stopping the press and causing the severing means to operate, means for rendering the severing means inoperable by the automatic devices, and means for then at will throwing the press operating means into and out of action.

Signed by me at city of New York, borough of Manhattan, this 26th day of March, 1908.

SAMUEL THOMAS WALKUP.

Witnesses:

ARTHUR S. GOODWIN,

WARD E. FLAXINGTON.