Jan. 19, 1954 C. A. HARSCH 2,666,417

HYDRAULIC TELESCOPIC BOOM

Filed Oct. 17, 1950 4 Sheets-Sheet 1

Fig. 2.

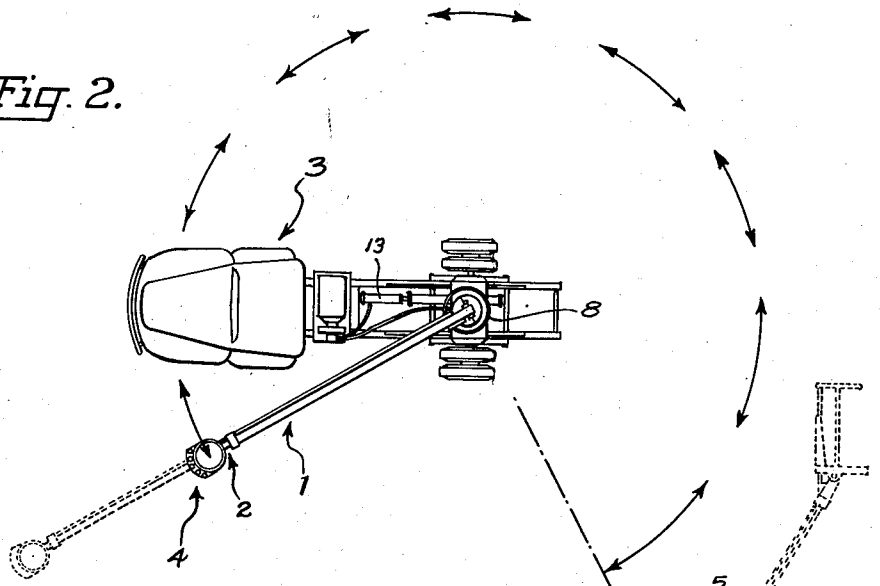

Fig. 1.

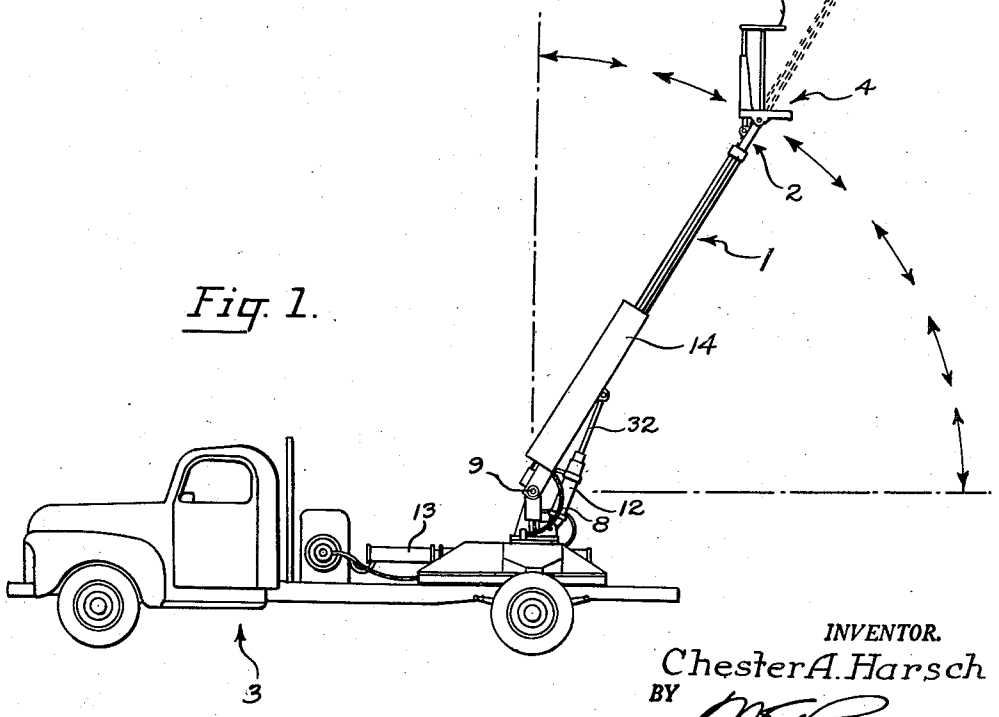

INVENTOR.
Chester A. Harsch
BY
Atty.

Jan. 19, 1954 C. A. HARSCH 2,666,417

HYDRAULIC TELESCOPIC BOOM

Filed Oct. 17, 1950 4 Sheets-Sheet 2

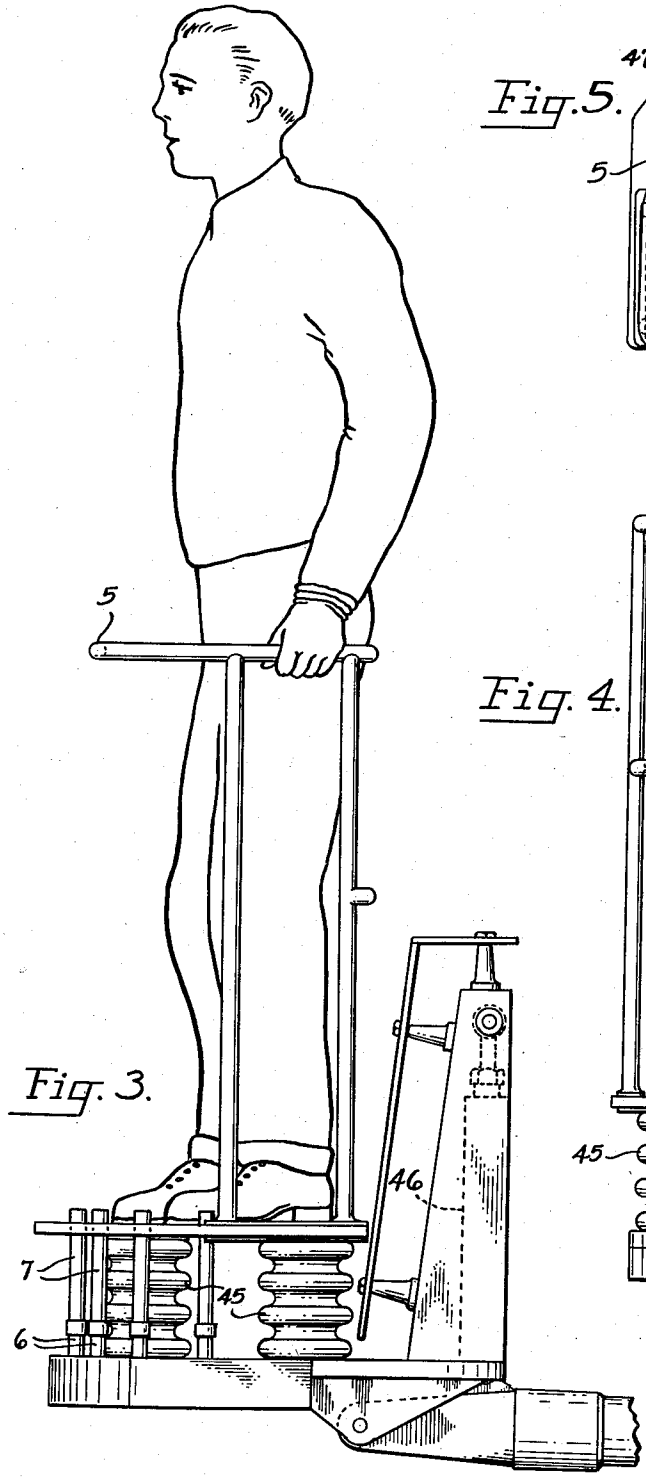

Fig. 3.

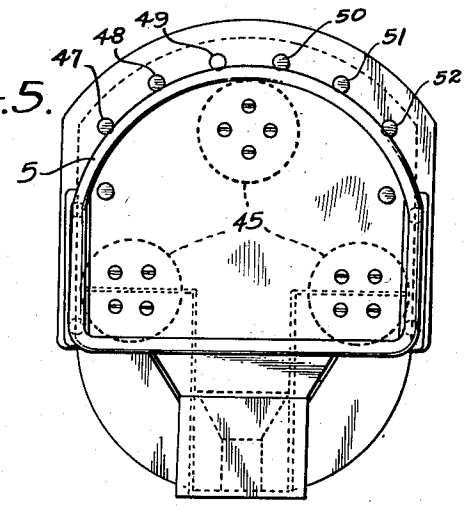

Fig. 5.

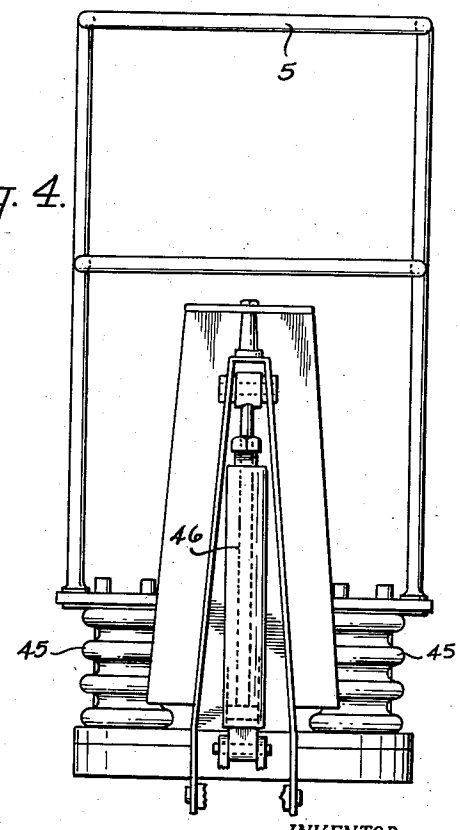

Fig. 4.

INVENTOR.
Chester A. Harsch
BY [signature]
Atty.

Jan. 19, 1954 C. A. HARSCH 2,666,417

HYDRAULIC TELESCOPIC BOOM

Filed Oct. 17, 1950 4 Sheets-Sheet 3

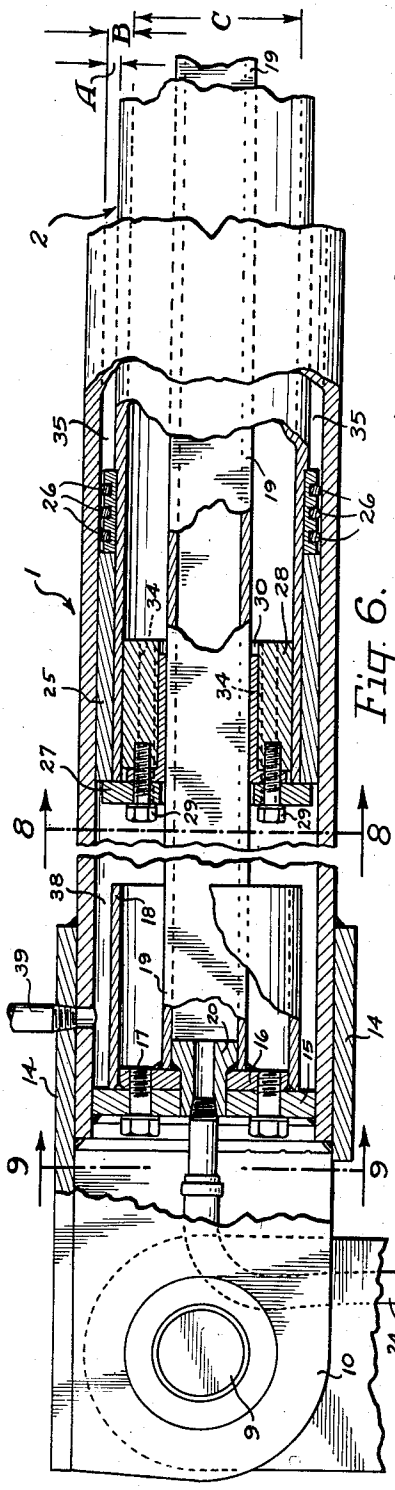

Fig. 6.

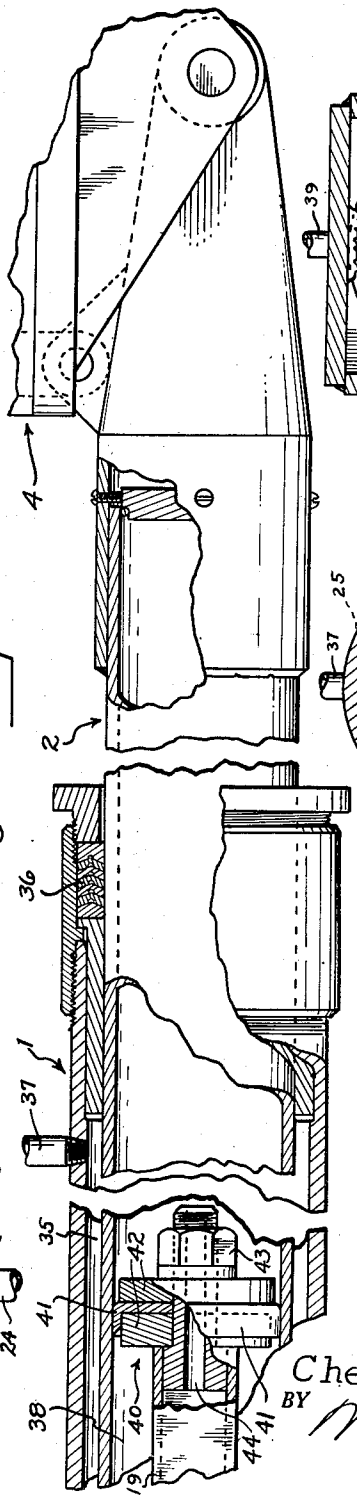

Fig. 7.

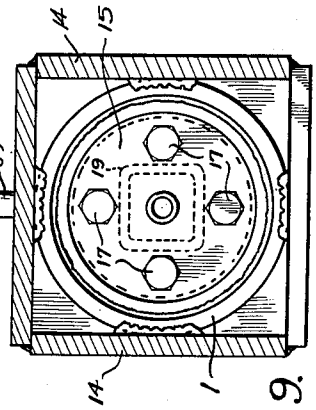

Fig. 9.

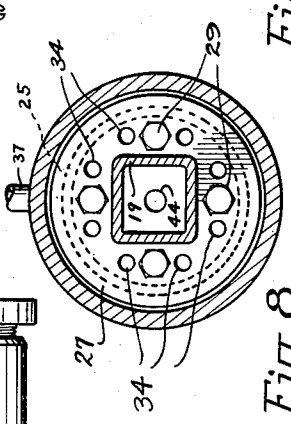

Fig. 8.

INVENTOR.
Chester A. Harsch
BY
Atty.

Jan. 19, 1954 C. A. HARSCH 2,666,417

HYDRAULIC TELESCOPIC BOOM

Filed Oct. 17, 1950 4 Sheets-Sheet 4

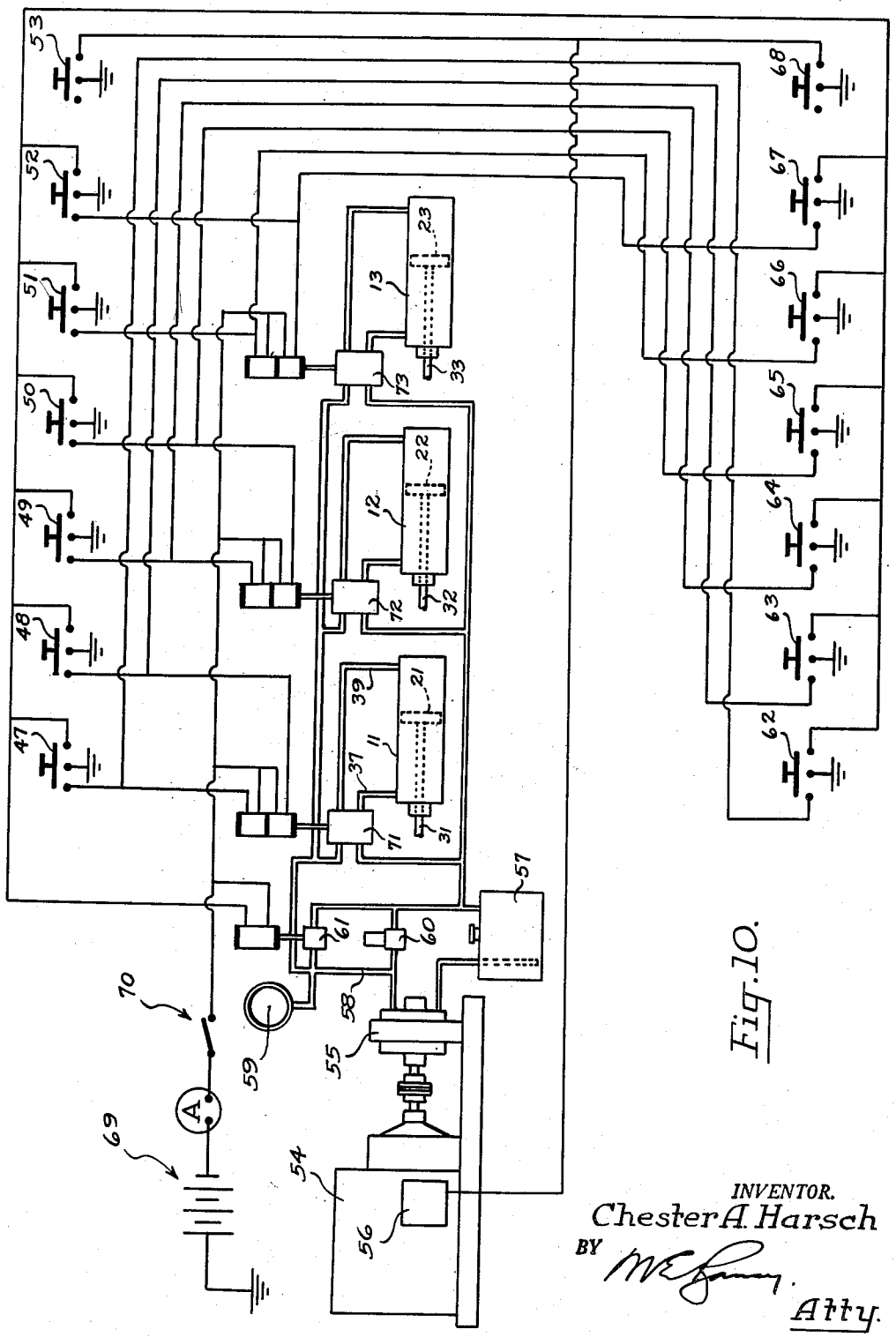

Fig. 10.

INVENTOR.
Chester A. Harsch
BY
Atty.

Patented Jan. 19, 1954

2,666,417

UNITED STATES PATENT OFFICE

2,666,417

HYDRAULIC TELESCOPIC BOOM

Chester A. Harsch, Portland, Oreg.

Application October 17, 1950, Serial No. 190,479

8 Claims. (Cl. 121—46)

1

This invention relates to a novel hydraulic structure correlating a telescopic boom and concentric fluid motor to produce a boom of superior structural strength requiring a minimum volume of operating fluid.

One object of my invention is to provide one of two large diameter, hollow, nested members of a telescopic boom with an annular operating piston of relatively small effective area whereby the members may be moved longitudinally with respect to one another with a minimum volume of operating fluid.

Hydraulically operated booms, hoists, and elevators which are longitudinally extensible by means of telescoping tubular members, have many structural features in common. Most of these structures utilize the hollow bore of one of the telescopic members to define a hydraulic actuating cylinder and the closed end of the other member nests therein and functions as a hydraulic piston. When pressure fluid is supplied to the cylinder, the piston extends the second telescopic member longitudinally. When pressure fluid is exhausted from the cylinder, the member will be retracted either because of the pull of gravity or because fluid is supplied to the other side of the piston. With all such structures, the lifting force is directly proportional to the cross-sectional area of the piston. Furthermore, the piston area is directly proportional to the diameter of the telescopic members. In general, large telescopic members are required to lift heavy loads and small members are employed to lift light loads. Similarly, since a telescopic boom's resistance to bending is directly proportional to the wall thickness and the diameter of the telescopic members; structures subject to high-bending moments employ massive members and vice versa. This leads one to an understanding of the particular problem which my invention solves—namely, how to provide an extensible boom having (1) superior bend resisting strength yet (2) a minimum effective piston displacement.

The telescopic boom of my invention is particularly adapted for use by utility maintenance crews. Thus, the boom is mounted for three degrees of movement (up and down, to and fro, and in and out) on a mobile base such as a truck chassis. The terminal end of the boom may reach 26 to 50 feet and it is equipped with an operating cage adapted to carry a workman. Control units, such as electric switches joined to solenoid-actuated valves, are located on the truck and on the floor of the operating cage.

2

The cage is protected by insulation and a safety railing encircles the workman's waist. This leaves his hands free to repair telephone and light wires, trim trees, or service street lights while located 35 feet or more above the street level. The workman may guide the boom movements by manipulating electric floor switches with his feet.

From the above description, it will be seen that the prime structural requisite of such a long boom is stiffness or a resistance to bending. This factor dictates the diameters which must be employed to give my telescopic tubular members sufficient strength to resist the bending moments induced by a workman and his tools carried at the end of a 26 to 50-foot reach. However, since my boom extending hydraulic piston and cylinder operate under pressures of 500 to 600 pounds per square inch, I need employ only a very small piston area. Furthermore, since the loads to be lifted seldom exceed 250 to 750 pounds, extension or retraction of the boom requires very little total force. Such a small piston area and small force, seemingly, are incompatible with the large diameter boom required to resist bending. Faced with this apparent incompatibility, my inventive concept has resolved the same and has provided a novel structural solution.

My solution employs two hollow bore tubular members arranged in slidably nested relationship and having sufficient size to resist all bending moments normally to be encountered. Within the scope of my invention, however, the periphery of the inner member carries an enlarged annular skirt serving to engage slidably the outer member and to space the walls of the members. An operating chamber is thus defined between the member walls and I join this sealed chamber to a fluid conduit. Similarly, the hollow bore of the outer member is closed at its lower end to define a cylinder and a second fluid conduit is joined thereto. By controlling the flow to these two conduits, differential pressures are built up in the operating chamber and cylinder and the nested members move in and out. Thus, the peripheral skirt defines an annular piston of substantially smaller area than the tubular member cross section. This small working area requires but a small volume of pressure fluid to effect an operation, yet my boom possesses a high resistance to bending.

Accordingly, one object of my invention is to provide the nested hollow sections of a telescopic boom with an enlarged annular skirt to space

the section walls and define a fluid operating chamber. Thus, as pressure fluid is supplied to and exhausted from the operating chamber and from the opposite sides of the annular skirt, the nested sections will move longitudinally with respect to one another.

Another object of my invention is to provide a telescopic boom having first and second hollow nested members carrying a slidably mounted, non-circular stem and guide means, respectively, to prevent relative rotation between the members while accommodating longitudinal movement therebetween.

A further object of my invention is to provide a telescopic boom having a first or lower member mounted on a mobile base which carries a first boom movement control station and a second or upper member which carries an operating cage on which is mounted a second boom movement control station. Thus, the movements of the telescopic boom may be controlled from either of two stations, selectively.

These and other objects and advantages of my invention will be hereinafter described in conjunction with the accompanying detailed description made with reference to the accompanying drawings, in which:

Fig. 1 is a side view of my telescopic boom showing the mechanism mounted on a truck chassis and indicating, in dashed lines, the position to which the boom may be extended;

Fig. 2 is a plan view, similar to Fig. 1, showing the telescopic boom in another position and indicating, by arrows, the rotary swinging movements of which the boom is capable;

Fig. 3 is a perspective view, some operating parts being shown in dashed outline, showing the insulated operating cage and bounding member disposed thereabout with a workman standing on the floor of the cage and encircled by the bounding member;

Figs. 4 and 5 are related side and top views, respectively, of the operating station in the cage and more particularly indicate the self-leveling piston therefor and the control switches mounted on the floor of the cage;

Figs. 6 and 7 are related side views of the lower and upper ends of the telescopic boom, respectively, partially broken away, showing the annular piston and other structural elements which give my boom a superior structural strength, yet which require a minimum volume of operating fluid;

Fig. 8 is a section view, taken substantially on the line 8—8 of Fig. 6, showing the second or outer hollow bore member of my telescopic boom and indicating the contour of the elongated stem which prevents relative rotation between the two boom members;

Fig. 9 is a section view, taken substantially on the line 9—9 of Fig. 6, showing the first and second hollow bore members and indicating the manner in which the first member is housed and is adapted to be mounted on a base; and

Fig. 10 is a schematic working diagram showing the various elements of my telescopic boom operating mechanism as symbols and indicating the relationship of these elements one to another.

In the preferred embodiment of my invention, the telescopic boom has a first or lower hollow bore tubular member 1 and a second or upper hollow bore tubular member 2. This telescopic boom can best serve the needs of a utility maintenance crew if it is mounted on a mobile base. Accordingly, I prefer the chassis of a truck 3 as such a base. It is to be noted, however, that a trailer, sled, or other mobile platform may be used as a mounting base if such is desired since the details thereof are without the scope of my invention.

The terminal end of the second tubular member carries an operating cage generally indicated at 4 and having a bounding member or railing 5 which defines and closely encompasses an operating station. This operating station carries a plurality of foot control switches 6 having lucite or other insulated extension rods 7 projecting through apertures in the floor of the cage. As will be understood by one skilled in the art and as is shown by the arrows and dashed outlines in Figs. 1 and 2, my telescopic boom is capable of three degrees of movement.

To this end, I journal a rotatable base member 8 on the truck chassis and, by ears 10, pivot the lower tubular member 1 about a horizontal pivot axle 9. The three degrees of boom movement are effected by three hydraulic motors 11, 12, and 13 (see Fig. 10), having piston elements 21, 22, and 23, respectively, and piston rods 31, 32, and 33, respectively. In Fig. 10, these double-acting hydraulic motors are shown schematically. Furthermore, since the instant invention is most concerned with that double-acting motor which extends and retracts the telescopic boom, that particular motor will be hereinafter described in more detail.

As to the three degrees of boom movement, let it be assumed that the double-acting hydraulic motor 12 is arranged to move the boom up and down as indicated by the double end arrows in Fig. 1. In such a case, as pressure fluid is supplied to one side of the piston element 22 and exhausted from the other side thereof, the piston rod 32, which is secured to the lower tubular member 1, will extend and retract to effect the desired movement. Similarly, the double-acting hydraulic motor 13 is secured to the truck chassis in the horizontal position. The piston rod 33 may be secured to the rotatable base member 8 by any conventional means, as for example a rack and pinion mechanism and, as the piston element 23 moves back and forth, the base 8 swings the telescopic boom in a rotary movement as indicated by the double-end arrows in Fig. 2. The double-acting hydraulic motor 11, piston 21, and piston rod 31, actually, are disposed within the two sections of the telescopic boom itself. It is this structure which extends and retracts the boom and is to be hereinafter described more particularly.

Returning now to Figs. 6 to 9 inclusive, I have therein shown the structural details of my extension mechanism. Thus, the second tubular member 2 is shown nested within the first tubular member 1. Both tubular members, as shown, have one open and one closed end. The closed end on the second tubular member, however, is optional since the hollow bore of the second member need not be sealed against fluid pressure at the extreme end thereof.

As before indicated, a protective housing 14 is welded to the lower end of the first tubular member 1 and carries pierced ears 19 for operative engagement with the horizontal pivot axle 9. The lower end of the first tubular member is sealed, as by a welded plate 15 having a second annular plate 16 welded thereto, and the parts are secured by bolts 17. Pendent from this second annular plate 16, I prefer to weld a stop skirt 18 so the upper tubular member 2 will not con-

tact the closed end of the lower tubular member 1 when the boom is fully retracted.

Concentric with the tubular member 1, I prefer to dispose an elongated axial stem 19 having a non-circular or square section, as shown in Fig. 8. This elongated stem is welded to the aforementioned plate 16 and carries a pierced drain plug 20 disposed axially thereof. The plug 20 leads to a hose 24 which serves to return any drained fluid to the hydraulic pump reservoir 57, as will be later described.

Returning now to the second or upper tubular member 2, an enlarged annular skirt 25 is disposed about the periphery thereof to define an annular piston element. The outer end of the skirt 25 is sealed as by O-rings 26 and the inner end is joined to an annular plate 27 as by welding. This plate 27, in turn, carries an apertured guide member 28 secured thereto by means of bolts 29. The center of the apertured guide member 28 carries a guide eye 30 of non-circular or square section to complement the peripheral outline of the non-circular stem 19. Thus, the function of the guide eye 30, as it slides over the stem 19, is to prevent relative rotation between the two tubular members.

To seal the end of the hollow bore of the second tubular member 2, I prefer to utilize a circular sealing head, such as is generally indicated at 40 in Fig. 7. This sealing head includes a leather cup 41 having backing plates 42 and a securing nut 43. The elongated stem 19 terminates in a threaded bolt portion which accommodates the nut 43. The bolt, in turn, is pierced by an axial drain hole 44. Thus, should any fluid leak past the inner face of the member 2 and the fluid wiping face of the cup 41, it will be returned to the fluid reservoir via the hole 44, plug 20, and hose 24.

As best shown in Fig. 8, the guide member 28 is pierced by a series of apertures 34 to place the hollow bores of the two tubular members in fluid communication. Thus, when my telescopic boom is in operative condition, the hollow bores of both of the tubular members 1 and 2 are, at all times, filled with pressure fluid.

The enlarged annular skirt 25 serves a second function in that it spaces the walls of the two tubular members one from another. Such a spacing defines an annular operating chamber 35, the outer end of which is sealed as by packing 36 secured to the terminal end of the first tubular member 1. Adjacent this packing 36, I pierce the wall of the outer tubular member 1 by a fluid conduit 37 in order to supply and exhaust pressure fluid from the operating chamber 35. Similarly, the hollow bore of the first tubular member 1 defines a closed end cylinder 38 which is joined to a similar fluid conduit 39 in order to supply and exhaust pressure fluid therefrom.

Adjacent the right end of Fig. 6, I have indicated a series of distances A, B, and C. The letter A indicates the width of the annular operating chamber 35, the letter B indicates the thickness of the enlarged annular skirt or piston 25, and the letter C indicates the overall diameter of the hollow bore of the tubular member 2. I utilize these letters to indicate one of the prime advantages of my inventive concept. Thus, the conventional hydraulic boom, elevator, or hoist utilizes a piston having a diameter equal to the diameter of the second telescopic member 2 (equal to the letter C plus the letter B). That is to say, with the conventional structure, the closed end on the second tubular member 2 defines a circular piston head and pressure is supplied to and exhausted from both sides of this large piston head to extend and retract the telescopic boom. With my novel structure, however, the apertures 34 place the hollow bores of the two tubular members in communication at all times. Accordingly, all pressure fluid located within the area defined by the diameter C is a "static" volume. This static volume does no work as the telescopic boom is extended and retracted but, rather, merely flows back and forth through the apertures 34. The pressure fluid in the cylinder 38 bears equally against both sides of the guide 28, bears against the closed end plate 15 of the lower tubular member 1, and bears against the sealing head 40 disposed within the bore of the outer tubular member 2. Thus, the effective or working thickness of my annular piston is defined by the letter B during extension and by the letter A during retraction.

When the telescopic boom is to be extended, pressure fluid is supplied to the cylinder 38 through the fluid conduit 39 and is exhausted from the operating chamber 35 through the conduit 37. The unbalanced area within the thickness B then acts as an annular piston (25) to extend the boom. Similarly, when the boom is to be retracted, pressure fluid is supplied to the fluid conduit 37 while it is exhausted from the fluid conduit 39 and the area bounded by the thickness A is utilized as a piston.

Turning now to Figs. 3 to 5 inclusive, I have therein shown the detailed construction of the workman's operating cage 4. This cage is insulated from the telescopic boom per se by means of insulators 45. This insulation is a safety measure since utility maintenance crews often work about high-tension lines. Thus, should a workman inadvertently come into contact with a high-tension line, the insulators 45 prevent the operating cage from being grounded and the worker is protected. Furthermore, the bounding member or railing 5 closely encompasses the waist of the worker and allows him to manipulate the boom with both hands free to accomplish his work.

The operating cage itself is self-leveling, and any conventional mechanical link or mercury switch mechanism may be utilized to accomplish this function. By way of example, I have shown a double-acting hydraulic motor 46 which bears upon the end of the tubular member 2 and upon a link joined to the cage itself. As the telescopic boom operates, this fluid leveling motor 46 extends and retracts automatically in direct relation to the tilt of the boom. Further by way of example, the supply and exhaust to the leveling motor 46 may be controlled by a mercury switch and solenoid valve mechanism or by a double-acting motor similar to motor 46 but located between the telescopic boom and the base member 8. With the latter construction, the two motors may be joined by fluid lines. This feature, however, forms no part of my present invention and further description thereof is deemed superfluous. Suffice to say, the cage 4 remains level in all operative positions of the telescopic boom.

The foot control switches 6 which are carried by the operating cage 4 are disposed in an arc about the front of the workman's cage as shown in Fig. 5. I have shown only six of these switches in Fig. 5 yet have shown seven in the upper portion of Fig. 10. It is to be understood that a seventh safety switch may be provided if desired. This seventh switch may function to stop the

telescopic boom mechanism entirely. I have given each of these switches a numeral 47, 48, 49, 50, 51, and 52 reading from left to right in Figs. 5 and 10. Each switch controls one direction of one degree of movement as will hereinafter be described.

Referring now to the schematic diagram of Fig. 10, I have therein shown the double-acting fluid motors 11, 12, and 13, as symbolic representations. The motor 11 corresponds symbolically, to the mechanism of Figs. 6–9. Furthermore, I have shown a driving engine 54 in direct operative engagement with a constant volume hydraulic pump 55. The engine is equipped with the conventional coil or magneto 56. The grounding of this coil will stop the engine 54 and the pump 55.

The constant volume pump 55 derives fluid from a reservoir tank 57 and supplies pressure fluid to a hydraulic pressure line 58 having a pressure gage 59. The hydraulic pressure line 58, in turn, divides to supply two branch return lines each of which carries a valve. These valves, respectively, are a spring biased pressure relief valve 60, and a solenoid-actuated by-pass valve 61. The construction of these valves is conventional. For example, the pressure relief valve 60 is joined to the hydraulic pressure line 58 to relieve any excess pressure which may build up therein. The settling of this valve is accomplished by varying the tension on a bias spring. On the other hand, the solenoid-actuated by-pass valve 61 is spring biased to an open position normally to pass pressure fluid back to the reservoir 57. When the solenoid is actuated, this valve closes and pressure fluid is no longer diverted back to the reservoir 57 but rather must feed one of the control valves or bleed through the valve 60.

In further explanation of the schematic diagram in Fig. 10, each of the hydraulic motors 11, 12, and 13 receives pressure fluid and exhausts spent fluid via a corresponding control valve 71, 72, or 73. These control valves are identical and each has one supply port (joined to pressure line 58), one exhaust port (joined to the reservoir 57), and two motor control ports (joined to the opposite ends of the mated motor cylinder). Each control valve can describe three separate operative positions. In one position, all ports are closed and no fluid can be supplied or exhausted through the valve. Thus, the first control valve position locks the corresponding motor against movement. In the second position, pressure fluid is supplied from the line 58 to one end of the corresponding hydraulic motor and exhausted from the other end thereof. In the third position, the supply and exhaust ports are reversed and the piston is caused to move in the opposite direction.

In the upper portion of Fig. 10, I have shown a series of seven switches 47 to 53, inclusive. Six of these switches are disposed on the floor of the operating cage as shown in Fig. 5 and are mated to the solenoids actuating the control valves 71, 72, and 73. The switch 53 may be carried in any convenient place such as on the railing 5 or on one of the legs supporting the same. The switch 53 is optional and, as before explained, functions as an emergency stop switch to ground the coil or magneto 56 and stop the engine 54. In the lower portion of Fig. 10, I have shown an identical series of seven switches 62 to 68, inclusive. This second series of switches I prefer to mate to corresponding ones of the

solenoids actuating the control valves 71, 72, and 73. Furthermore, I prefer to locate the second series of switches, if they are used, at the base of the telescopic boom or in the cab of the truck 3. Thus, when desired, the telescopic boom may be used as a hoist or crane and control may be effected from some point other than the operating cage 4.

As before mentioned, each of the switches is mated to a corresponding one of the solenoids controlling the valves 71, 72, and 73. For example, the switch 47 and the switch 48 control the two solenoids actuating the valve 71; the switches 49 and 50 control the two solenoids actuating the valve 72; and the switches 51 and 52 control the two solenoids actuating the valve 73. Switch 62 corresponds to switch 47, switch 63 to switch 48, etc. Thus, each switch carries three contact points and the center contact point is grounded. Of the other two contact points, one is joined to a control valve solenoid, and the other is joined to the solenoid controlling the by-pass valve 61. Depression of any one of the switches, therefore, will actuate a corresponding control valve and will also actuate the by-pass valve 61. One side of each solenoid, in turn, is joined to the battery 69 through an ammeter A and a switch 70. This side of the solenoid is "hot" so long as the switch 70 is closed. When closed, the switches 47 to 53, and 62 to 68, complete the circuit through their grounded contact terminals.

The emergency means for stopping the telescopic boom control mechanism takes the form of a pair of emergency switches 53 and 68. These are joined to the magneto or coil 56 as before explained. Thus, if the emergency switch 68 is depressed, the engine 54 stops, the pump 14 stops, and the boom can no longer be extended. The boom may, however, be retracted if the force of gravity is sufficient to push the piston to exhaust fluid from one side thereof when the corresponding control valve is actuated.

In the operation of my invention, let it be assumed that the truck 3 has been driven to a point adjacent the base of a high tree. This tree must be trimmed by a utility maintenance crew to prevent interference with high-tension transmission lines passing thereover. During transportation, the telescopic boom is carried in a retracted and lowered position with the cage 4 riding over the cab of the truck 3. When the gasoline engine 54 has been started and the switch 70 has been closed, a workman mounts the boom by stepping on the hood and cab of the truck and up into the cage 4 so the safety rail 5 surrounds his waist (see Fig. 3). Once in the cage 4, the switches 47 to 53, inclusive, are disposed in an arc about his feet in convenient position for foot actuation.

Prior to the depression of one of the control switches, the boom is at rest and the constant volume pump 55 delivers pressure fluid to the pressure line 58 and back to the reservoir 57 through the normally open by-pass valve 61. At this time, the pressure gage 59 will register no pressure and the pump merely circulates a free-flowing fluid under "no load" conditions. That is to say, the port of the by-pass valve 61 will pass freely all fluid supplied by the pump. As an example of the boom extension, let it be assumed that the workman wishes to move the boom from the full line position to the dashed line position of Fig. 1. This movement will be accomplished by one of the switches 47, 48 or 62, 63 and by means of the structure shown in

detail in Figs. 6 to 9, inclusive. Thus, as the workman depresses the switch 47, two valves move concurrently. The by-pass valve 61 is closed and the control valve 71 is opened to one control position. These valve movements are simultaneous. That is to say, when the by-pass valve 61 is closed, pressure fluid is no longer diverted from the pressure line 58 to the reservoir 57 across the valve 61. Instead, pressure fluid feeds through the line 58 to the control valve 71. From the control valve 71 the pressure fluid passes to one end of the hydraulic motor 11. At the same time, pressure fluid is exhausted from the other end of the hydraulic motor through the valve 71 to the reservoir 57.

Turning now to Figs. 6 and 7, pressure fluid is supplied to the cylinder 38 via the conduit 39 and is exhausted from the operating chamber 35 via the conduit 37. Thus, cylinder 38 and chamber 35 correspond to the two ends of the motor 11. As fluid under pressure is supplied to the cylinder 38, it acts upon the enlarged annular skirt or piston 25 over an area defined by the thickness B and the second or outer member 2 is moved to the right with reference to the drawings. If the switch 47 is held depressed (if an optional control is utilized, the switch 62 will accomplish the same function, the boom continues to move out or extend until it reaches the end or limit of its movement. This limit is reached when the outer end of the annular skirt 25 engages the ring holding the packing 36 which is disposed between the spaced walls of the tubular members.

If the boom is to be retracted, the workman will depress the switch 48 (or a fellow workman may depress the switch 63). This will shift the control valve 71 to exhaust fluid from the cylinder 38 via the conduit 39 and supply fluid to the operating chamber 35 via the conduit 37. During this bottom retraction movement, the area defined by the thickness A comes into play for it is this area on which the fluid pressure in the operating chamber 35 acts. Thus, my telescopic boom requires a minimum of operating fluid due to the minimum area of the novel annular operating piston. I need not employ a large volume pump and large conduits. In order to achieve a superior bend resisting structure, however, I do prefer to employ large diameter tubular members. These members should be of sufficient size to resist all bending moment normally to be encountered.

As the lower or first hollow tube member moves longitudinally in either direction, the guide eye 30 in the apertured member 28 slides over the complementary non-circular periphery of the elongated stem 19 and prevents relative rotation between the two tubular members. Furthermore, should any fluid leak past the sealing head 40, it is drained away when the boom is brought to an approximate vertical position. This drainage takes place through the drain hole 44, the pierced drain plug 20, and the hose 24 back to the reservoir 57.

In accord with the objects of my invention, I have employed two hollow bore tubular members which are arranged in slidable nested relationship and which have sufficient size to resist all bending moments normally to be encountered. Furthermore, the periphery of the inner or upper tubular member carries an enlarged annular skirt serving to engage slidably the outer or lower member and to space the walls of the members to define an annular operating chamber. The hollow bore of the outer or lower member is closed at its lower end to define a cylinder and fluid conduits are joined to this cylinder and to the operating chamber. By controlling the fluid supply and exhaust from the cylinder and operating chamber, the telescopic boom is caused to extend and retract, selectively. Furthermore, the control means for these movements may be located adjacent the base of the boom and on the cage carried on the terminal end of the boom to allow actuation form either location. By this construction, I have solved the apparent incompatibility of a large diameter boom and a small piston area.

I claim:

1. A telescopic boom, comprising first and second tubular members having first and second hollow bores, respectively, said members being telescopically arranged with the first member mounted on a base, an enlarged annular skirt means carried about the periphery of said second member in slidable contact with said first hollow bore to provide an annular operating cylinder intermediate the walls of said members, an elongated stem secured centrally to one end of said first member and extending axially of both of said hollow bores, said stem terminating in a circular fluid seal head having wiping contact with said second hollow bore, an elongated annular guide member fixed to said second member within said second hollow bore and concentric with said annular skirt, said guide member being pierced by an axial guide eye in which said stem slidably is mounted, and a plurality of elongated apertures extending through said guide member parallel the axes of said tubular members and communicating at the respective ends thereof with said first and second bores.

2. In a telescopic boom having a first elongated tubular member with a first hollow bore and a second elongated tubular member with a second hollow bore, said second member being nested telescopically within said first bore, an enlarged annular skirt means carried about the periphery of said second member in slidable contact with said first hollow bore to provide an annular operating cylinder intermediate the walls of said members and to define an annular piston operable in said annular cylinder, an elongated stem secured centrally to one end of said first member and extending axially of both of said hollow bores, said stem terminating in a circular fluid seal head having wiping contact with said second hollow bore, an elongated annular guide member fixed to said second member within said second hollow bore and concentric with said annular skirt, said guide member being pierced by an axial guide eye in which said stem slidably is carried, and a plurality of elongated apertures extending through said guide member parallel the axes of said tubular members and communicating at the respective ends thereof with said first and second bores, said elongated stem having a drain opening extending axially therethrough from beyond said fluid seal head to beyond the end of said first tubular member.

3. In an extensible telescopic boom, a first elongated tubular boom member having a first hollow bore extending axially therethrough, said first hollow bore being open at one end and closed at the other end to define a first cylinder for a fluid motor, a second tubular boom member defining a first piston mated to said cylinder, said second boom having a second hollow bore extending axially therethrough, the outside diameter of said second member being smaller than the diameter of said first hollow bore to define

an annular operating cylinder intermediate the walls of said boom members, said annular operating cylinder being sealed from said second hollow bore and from said first cylinder, said tubular members being telescopically arranged with one end of the second member within the first hollow bore and the other end thereof protruding out and beyond the open end of the first hollow bore, an annular skirt carried about the periphery of said second member one end and slidably contacting the inner periphery of the first hollow bore to define an annular piston operable in said annular cylinder, an elongated hollow stem secured to the closed end of the first boom member and extending axially thereof within said second hollow bore, said stem terminating in a circular sealing head having a wiping seal contact with said second hollow bore, an elongated guide member secured to the second member one end within the hollow bore thereof, said guide member being pierced by a guide aperture complementary to said stem and slidably encompassing the same, and a plurality of apertures piercing said guide member intermediate said guide aperture and second boom member, said plurality of apertures extending axially of the boom member and communicating with both said first and said second hollow bores.

4. In an extensible telescopic boom having three degress of movement, a first elongated tubular boom member mounted upon a base and having a first hollow bore of uniform diameter extending axially therethrough, said first hollow bore being open at one end and closed at the end mounted upon said base to define an operative cylinder, a second elongated tubular boom member having a second hollow bore of uniform diameter extending axially therethrough, the outside diameter of said second member being smaller than the diameter of said first hollow bore to define an annular operating cylinder intermediate the walls of said boom members, said annular operating cylinder being sealed from said second hollow bore, said tubular members being telescopically arranged with one end of the second member within the first hollow bore and the other end thereof protruding out and beyond the open end of the first hollow bore, an annular skirt carried about the periphery of said second member one end and slidably contacting the inner periphery of the first hollow bore to define an annular piston operable in said annular cylinder, an elongated hollow stem secured to the closed end of the first boom member and extending axially thereof through both of said hollow bores, said stem being non-circular in cross-section and terminating in a circular sealing head having a wiping seal contact with said second hollow bore, an elongated guide member secured to the second member one end within the hollow bore thereof, said guide member being pierced by a non-circular axial guide aperture complementary to said non-circular stem and slidably encompassing the same, and a plurality of elongated apertures piercing said elongated guide member intermediate said guide aperture and second boom member, said plurality of apertures extending axially of the boom member and communicating with both said first and said second hollow bores, said hollow stem having a drain opening through both ends thereof to the hollow interior thereof, said drain opening extending beyond said sealing head and communicating with the second hollow bore.

5. A telescopic boom, comprising a first boom member having a hollow bore open to one end and closed at the other end to define a cylinder, a second boom member having a hollow bore open to one end and carrying an enlarged peripheral skirt slidably nested within said first member hollow bore to space the member walls and define a piston, a fluid seal head slidably nested within the hollow bore of said second member and secured to said first member closed end by an elongated stem, an apertured guide fixed to the open end of said second member and having a guiding eye slidably engaging said elongated stem, said apertured guide being pierced by a plurality of elongated apertures extending parallel the axes of said boom members and communicating at all times with both the hollow bores thereof, and means for supplying and exhausting pressure fluid from the opposite sides of said piston, selectively, to move said members longitudinally with respect to one another.

6. A telescopic boom, comprising a first boom member having a hollow bore open to one end and closed at the other end to define a cylinder, a second boom member having a hollow bore open to one end and carrying an enlarged peripheral skirt slidably nested within said first member hollow bore to space the member walls and define an annular piston, a fluid seal head slidably nested within the hollow bore of said second member and secured to but spaced from said first member closed end by an elongated stem, an apertured guide fixed to the open end of said second member and having a guiding eye slidably engaging said elongated stem, said stem and eye being of complementary non-circular form to prevent relative rotation between said members, said apertured guide being pierced by a plurality of elongated apertures extending parallel the axes of said boom members and communicating at all times with both the hollow bores thereof, and means for suplying and exhausting pressure fluid from the opposite sides of said piston, selectively, to move said members longitudinally with respect to one another.

7. A telescopic boom, comprising a first boom member having a hollow bore open to one end and closed at the other end to define a cylinder, a second boom member having a hollow bore open to one end and carrying an enlarged peripheral skirt slidably nested in fluid tight relationship within said first member hollow bore to space the member walls and define a piston, an operating chamber located between said spaced walls and sealed at the ends thereof by said skirt and by a peripheral fluid seal carried by said first member adjacent the open end thereof, a fluid seal head slidably nested within the hollow bore of said second member and secured to said first member closed end by an elongated stem, an apertured guide fixed to the open end of said second member and having a guiding eye slidably engaging said elongated stem, said apertured guide being pierced by a plurality of elongated apertures extending parallel the axes of said boom members and communicating at all times with both the hollow bores thereof, and means for supplying and exhausting pressure fluid from the opposite sides of said piston, selectively, to move said members longitudinally with respect to one another, said means including fluid conduits joined to said operating chamber and cylinder, respectively.

8. A telescopic boom, comprising a first tubular boom member having a hollow bore open to one end and closed at the other end to define a cylinder, a second tubular boom member having a hollow bore open to one end and carrying an en-

larged peripheral skirt slidably nested within said first member hollow bore to space the member walls and define an annular piston, an annular operating chamber located between said spaced walls and sealed at the ends thereof by said skirt and by a peripheral fluid seal carried by said first member adjacent the open end thereof, a fluid seal head slidably nested within the hollow bore of said second member and secured to but spaced from said first member closed end by an elongated stem, an apertured guide fixed to the open end of said second member and having a guiding eye slidably engaging said elongated stem, said stem and eye being of complementary non-circular form to prevent relative rotation between said members, said apertured guide being pierced by a plurality of elongated apertures extending parallel the axes of said boom members and communicating at all times with both the hollow bores thereof, and means for supplying and exhausting pressure fluid from the opposite sides of said piston, selectively, to move said

members longitudinally with respect to one another, said means including fluid conduits joined to said operating chamber and cylinder, respectively.

CHESTER A. HARSCH.

References Cited in the file of this patent

UNITED STATES PATENTS

Number	Name	Date
1,223,741	Schwister	Apr. 24, 1917
1,264,727	White	Apr. 30, 1918
1,294,266	Hogg	Feb. 11, 1919
1,328,461	Strauss	Jan. 20, 1920
1,552,768	Smith	Sept. 8, 1925
1,718,979	Protzeller	July 2, 1929
1,917,010	Bird	July 4, 1933
2,193,736	Onions	Mar. 12, 1940
2,196,511	Wagner	Apr. 9, 1940
2,376,875	Honig	May 29, 1945
2,450,152	Miller	Sept. 28, 1948
2,500,815	Gerli	Mar. 14, 1950
2,512,150	Geren	June 20, 1950