May 26, 1959 W. D. COFFEY 2,887,735

MULTIPLE DOOR LATCHING SYSTEM

Filed Jan. 14, 1957 3 Sheets-Sheet 1

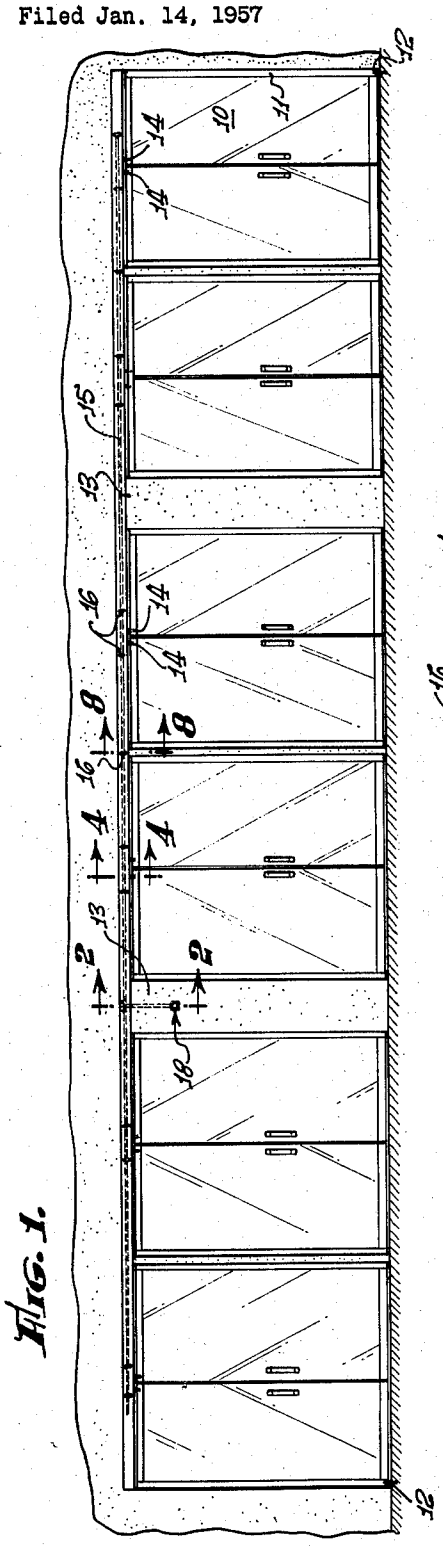

Fig. 1.

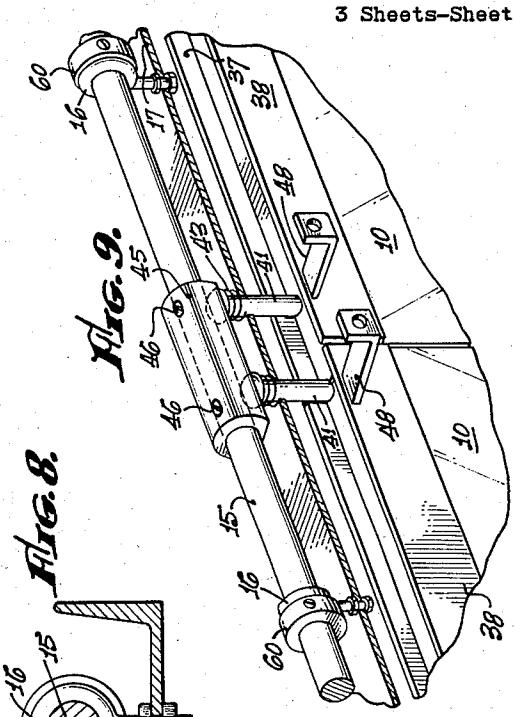

Fig. 9.

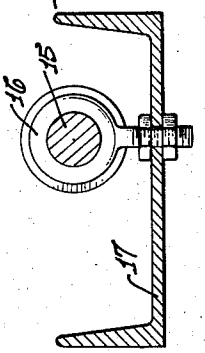

Fig. 8.

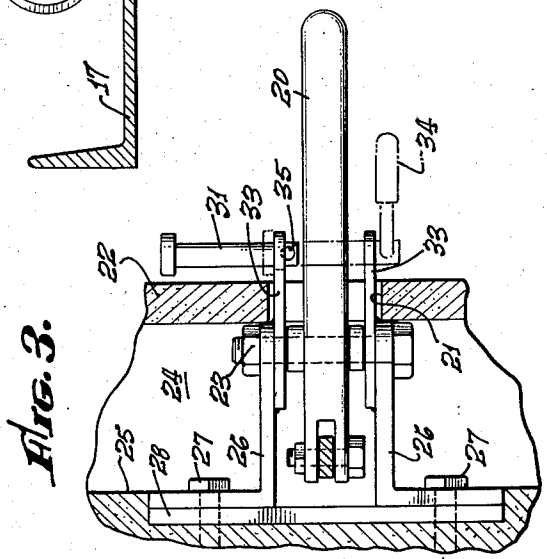

Fig. 3.

WILLIAM D. COFFEY,
INVENTOR.

By Hobson White
ATTORNEY.

May 26, 1959 W. D. COFFEY 2,887,735

MULTIPLE DOOR LATCHING SYSTEM

Filed Jan. 14, 1957 3 Sheets-Sheet 2

FIG. 2.

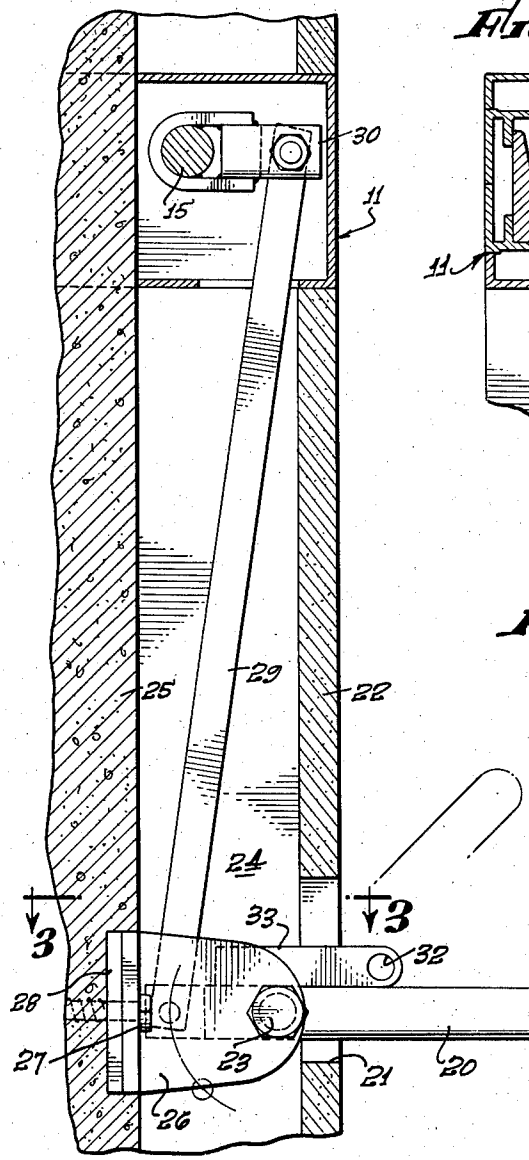

FIG. 4.

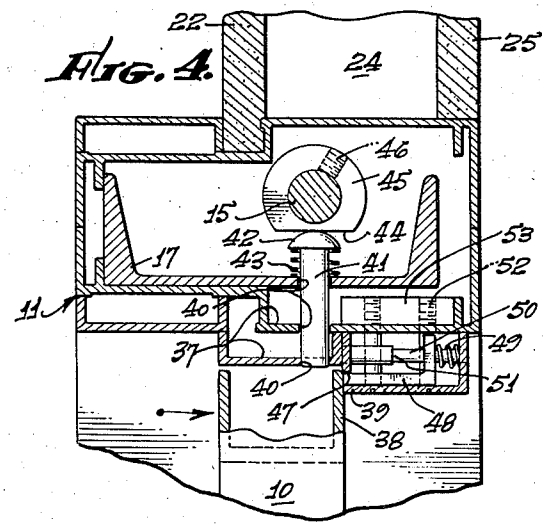

FIG. 5.

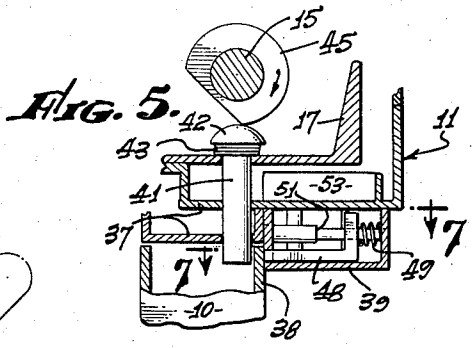

FIG. 6.

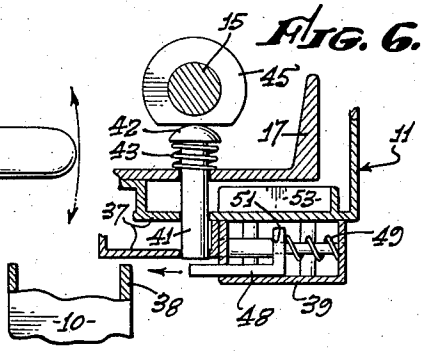

FIG. 7.

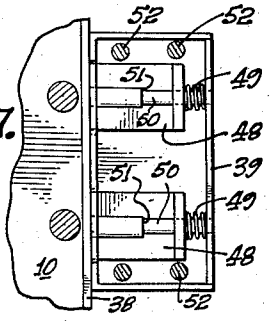

WILLIAM D. COFFEY
INVENTOR.

By Healow White
ATTORNEY.

May 26, 1959 W. D. COFFEY 2,887,735

MULTIPLE DOOR LATCHING SYSTEM

Filed Jan. 14, 1957 3 Sheets-Sheet 3

FIG. 10.

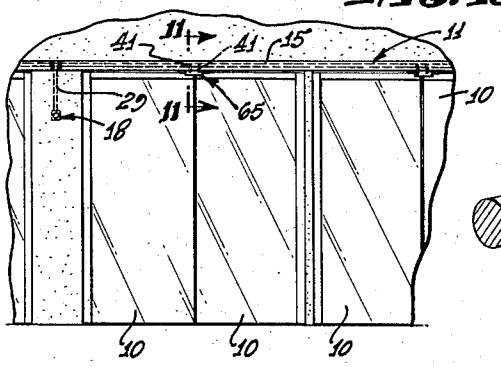

FIG. 14.

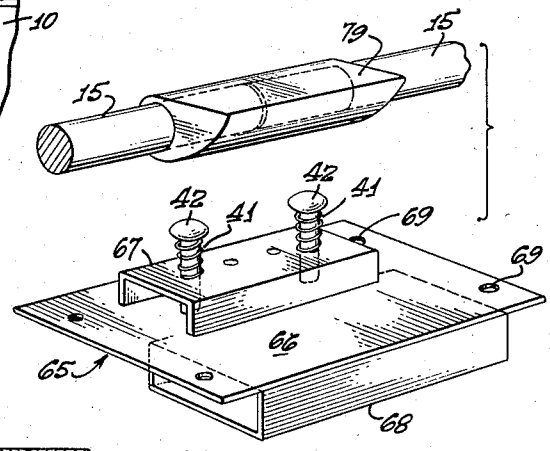

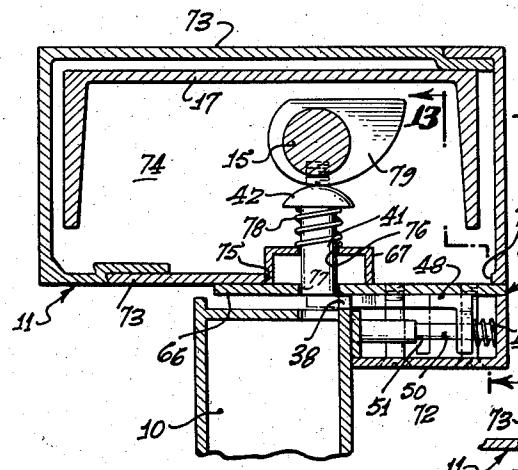

FIG. 11.

FIG. 13.

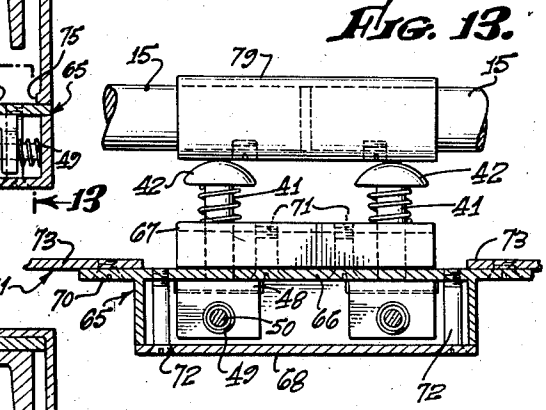

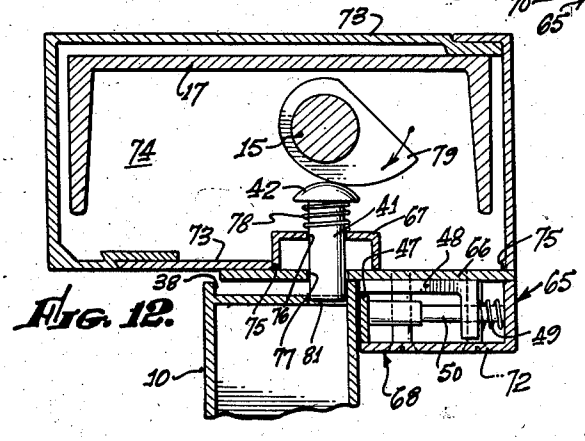

FIG. 12.

WILLIAM D. COFFEY,
INVENTOR.

By Healan White
ATTORNEY.

United States Patent Office 2,887,735 Patented May 26, 1959

2,887,735

MULTIPLE DOOR LATCHING SYSTEM

William D. Coffey, Beverly Hills, Calif.

Application January 14, 1957, Serial No. 633,911

15 Claims. (Cl. 20—16)

This invention relates generally to door latching mechanisms and more particularly has to do with a novel mechanical system for positively latching a number of doors against opening. Particularly contemplated is the provision of latching means generally inaccessible from both sides of the doors when the latter are closed and operable from a remote location to simultaneously latch and unlatch the doors as desired.

Where multiple doors are installed, particularly in rows, as in theater lobbies, and at the fronts of stores and buildings, there are certain advantages in having all the doors under the control of a multiple latching system that is mechanically operated. Such advantages include the provision for simultaneous mechanical unlatching of all the doors as controlled from a remote point so that persons waiting in different lines behind the various doors may be given simultaneous access through the doors when the latter are unlatched, this arrangement being important to the orderly handling of crowds especially in emergencies where rapid exits from crowded aisles and rooms must be opened. An entirely mechanical system is especially desirable from the standpoint of simplicity of installation and operation, and interlocking of all the doors together against being forced or broken open.

The present novel multiple door latching system was particularly designed with the above and other advantages in mind, and in its broad contemplation and scope is applicable to door and frame assemblies wherein each such assembly includes at least one door normally freely movable relative to its door frame. Accordingly, the invention in essence comprises a plurality of latches carried by the various door and frame assemblies and blocking movement of the doors relative to their frames when the doors remain closed with portions of the latches extending outside the door peripheries, mechanical means extending outside and preferably above the door peripheries to the latches keeping them in door blocking relation and operable to simultaneously free the latches from such blocking relation, and manually actuable means for operating the mechanical means at a point remote from the latches. For keeping the latches out of door blocking relation when the doors are open, the invention contemplates the provision of means displaced by the closed doors out of latch blocking relation and movable into blocking relation with the freed latches in response to opening of the doors.

The invention finds particular application to latching of multiple door systems comprising a number of door pairs arranged in rows, each pair of doors normally being freely movable away from the center of the frame opening when the doors are opened. Whereas conventional door pairs of this type are designed to interlock at door handle level across their mutually facing vertical sides, with resultant undesirable weak and unsatisfactory latching, the present system provides for positive latching of inaccessible top portions of the door pairs with respect to the rigid door frames, the latching system other than the latches themselves at no time obstructing door movement.

Other features and objects of the invention, as well as the details of an illustrative embodiment, will be more fully understood from the following detailed description of the drawings, in which:

Fig. 1 is an elevation showing a large number of theater lobby doors and the latching system therefor;

Fig. 2 is an enlarged section taken on line 2—2 of Fig. 1;

Fig. 3 is a section taken on line 3—3 of Fig. 2;

Fig. 4 is a section taken on line 4—4 of Fig. 1 showing a door in closed position but remaining unlatched;

Fig. 5 is a section similar to Fig. 4 showing the closed door in latched condition;

Fig. 6 is a section similar to Fig. 4 showing the door in partly open position with the latch inoperative;

Fig. 7 is a section taken on line 7—7 of Fig. 5;

Fig. 8 is a section taken on line 8—8 of Fig. 1;

Fig. 9 is a perspective fragmentary showing of a pair of doors in closed position but remaining unlatched, as in Fig. 4;

Fig. 10 is a fragmentary elevation similar to Fig. 1 showing a modified application of the invention to pairs of doors;

Fig. 11 is a section taken on line 11—11 of Fig. 10 showing the modified form of the invention with the door closed but unlatched;

Fig. 12 is a section similar to Fig. 11 showing the door closed and latched;

Fig. 13 is a section taken on line 13—13 of Fig. 11; and

Fig. 14 is a perspective showing of the modified latch supporting means.

In Fig. 1 a large number of doors **10** are shown grouped in pairs and closed relative to their frames **11** upon which the doors are shown as hinged at **12** to swing outward. The frames may comprise the structure of the building itself or separate rectangular members as shown with vertical building structure **13** separating the different frames from the door pairs.

The broken lines **14** in Fig. 1 illustrate latches blocking opening movement of the doors relative to their frames, portions of these latches extending outside and above the door peripheries. The latches extend generally in a horizontal row and are worked in response to rotation of a horizontal shaft shown in broken lines in Fig. 1 extending above the latches. Such rotation is guided by the eyebolt bearings **16** shown in Fig. 8 and through which the shaft extends, the eyebolts being spaced along the length of the shaft and connected to a horizontal channel **17** forming a portion of the frame. Rotation of the shaft is typically though not necessarily accomplished by actuation of the handle mechanism generally indicated at **18** at being remote from most of the door latches and mounted by and within structure **13** to be accessible to a person standing in front of the mechanism. The latches however are not so accessible as they are at door height and thus out of reach as well as being completely enclosed by the elongated hollow frame work **11** and the top portions of the doors.

Turning to Figs. 2 and 3 of the drawings, the details of the manually actuable handle mechanism are illustrated to include the handle **20** projecting outwardly through an opening **21** in the front wall **22** of the building structure typically comprising plaster or siding, the handle being pivoted or fulcrumed at **23** within the space **24** between the front wall **22** and the structural support **25**. The handle pivot is supported by a horizontally spaced pair of L-brackets **26** rigidly connected to the structural support by fasteners **27** extending through the brackets and a rigid base plate **28**. A motion transmitting link **29** is connected between the free inner end of the handle and the free end of a crank **30** joined to the shaft **15** in such a way that lifting of the handle rotates the shaft

forwardly or clockwise. When the handle is in its upper position shown in broken lines in Fig. 2, a bolt 31 may be slipped through openings 32 in the bracket extensions 33 to extend across the path of handle downward movement, thereby preventing such movement to lock the shaft 15 against counterclockwise rotation effective to unlatch the doors, as will be described. When the bolt is in this position, a padlock 34 or other locking device may be connected through the bolt opening 35 to prevent unlatching of the doors.

Referring now to Figs. 4 and 7 through 9 in which the doors are shown in closed position but remain unlatched, the shafting 15 and the channel 17 are enclosed within the rigid metallic frame assembly 11 extending horizontally lengthwise over the doors. The frame includes trim pieces 37 directly above the upwardly opening channeled door section 38 closed against the stop 39, the trim pieces and the channel 17 containing vertically aligned openings 40 sized to receive a vertically elongated latch 41. With the shafting 15 in unrotated position as illustrated in Fig. 4, the latch rounded head 42 is urged upwardly by a spring 43 against the horizontal flat 44 of an otherwise circular elongated cam 45 attached to the shaft by set screws 46. In this position, the lower ends of all of the latches remain out of blocking relation with the door channel sections 38, and are lifted by the springs 43 to their uppermost positions.

The door stop 39 is in the shape of a hollow receptacle containing a forward slot 47 through which the forward end of a horizontally extending L-shaped slider 48 extends into engagement with the channel door section 38. The vertical leg of the slider is urged leftwardly by a spring 49 in the receptacle and at the same time guided in such movement by a guide 50, so that as the door is opened away from the stop as shown in Fig. 6, the forward end of the slider 48 moves leftwardly beneath the latch 41 to block downward depression thereof by the cam 45, preventing such movement of the latches as would otherwise block closing of the doors.

On the other hand, when the doors are closed, the channeled sections 38 displace the sliders rightwardly to the position shown in Figs. 4, 7 and 9 so that the latches are then free to be displaced. Leftward movement of the sliders is limted by their engagement against stops 51 on the guides, and fasteners 52 threaded into blocks 53 hold the door stopping receptacles 39 in position against the underside of the frame assembly 11.

Referring now to Fig. 5, clockwise rotation of the shafting 15 rotates the cams 45 displacing the latches downwardly against the resistance of the compression springs 43 so that the lower ends of the latches are brought into blocking relation with the door channeled sections 38. In this position, section 38 is blocked against movement in either direction by the latch 41 and the stop 39 at opposite sides thereof. The slight clearance between the door sections 38 and trim piece 37 directly thereabove for all practical purposes prevents access to the latches which are otherwise enclosed within the frame assembly 11 outside the door peripheries and inaccessible to a person standing in front of the door. Likewise, the shafting and cams are also enclosed and inaccessible.

The cams 45 may be shifted along the length of the shafting 15 simply by loosening their set screws 46. As seen in Fig. 9, suitable collars 60 are also attached to the shaft by set screws at locations at opposite sides of one or more eyebolts 16 to endwise position the shafting with the cams centered over their corresponding latches.

Referring now to Figs. 10 through 14 illustrative of the modified form of the invention, Fig. 10 shows two pairs of doors 10 closed relative to and beneath the horizontally elongated frame 11 extending above all the doors. Shafting 15 is indicated by broken lines as extending horizontally through the hollow frame, with a handle lever 18 remote from the doors being operatively connected with the shafting through a link indicated by

broken lines at 29, the connection being similar to that described in Fig. 2.

Extending the description to the remaining figures, each pair of doors 10 is adapted to be latched against opening movement by a pair of latches 41 mounted by the support assembly generally indicated at 65 as being connected with the underside of the frame 11. As better shown in Fig. 14, the support assembly includes a plate 66 to the upper and lower sides of which are connected upper and lower channel members 67 and 68, there being suitably spaced holes 69 formed in the plate for receiving screws 70 removably connecting the plate to the underside of the frame 11. Likewise, screw sets 71 and 72 respectively connect the upper and lower channels to the plate 66, all as shown in Figs. 11 through 13.

The frame 11 generally comprises a pair of L-shaped members 73 relatively inverted and interconnected to form an enclosure 74 through which the shaft 15 extends and is mounted for rotation as previously described, channel 17 being inverted for this purpose. In order that each support assembly 65 may be readily connected with the frame 11 with the latches 41 positioned between the shafting 15 and the upper periphery of the door 10, the lower member 73 of the frame 11 contains an opening 75 receiving the upper channel member 67. The latter and the plate 66 contain openings 76 and 77 through which the shank of the latch 41 extends, the rounded latch head 42 being urged upwardly in the enclosure 74 by a compression spring 78 seating on the channel member 67. Thus as shown in the figures, each support assembly 65 mounts a pair of the latches 41, which are workable simultaneously by rotation of an elongated cam 79 interconnecting the coaxial segments of the shafting 15 and bearing against the latch heads 42. As here shown the cam curvature is non-circular and rises relatively away from the axis of rotation thereof so that as the cam is forwardly rotated a latch head 42 will be depressed and the spring 78 compressed with minimum resistance.

Working of the latches is better shown in Fig. 12, wherein the shank of a latch 41 is shown typically advanced downward into the door channel section 38 and into an opening 81 formed in the top of the door, so as to block leftward opening door movement, and thereby hold the door against or very near the lower channel 68 acting as a door stop. With the cam 79 reversely rotated by the shaft 18, as better shown in Fig. 11, the latches are urged upward by the springs 78 out of door blocking relation.

The channel 68 contains a forward slot 47 through which the forward end of a horizontally extending L-shaped slider 48 extends into engagement with the channel door section 38, all as previously described. Here again the vertical leg of the slider is urged leftwardly by a spring 49 and at the same time guided in such movement by a guide 50, so that as the door is opened away from the channel 68 the slider forward end moves leftwardly beneath the latch 41 to block downward depression thereof by the cam 79, preventing downward movement of the latches that would effectively block closing of the doors. As shown in Figs. 11 and 12, when the doors are closed they displace the sliders rightwardly so that the latches are then free to be downwardly moved into door blocking position.

The form of the invention shown in Figs. 10 through 14 is particularly adapted for connection to the frame 11 with minimum difficulty, inasmuch as the support assembly 65 in itself mounts the pairs of latches and the pairs of sliders 48 which cooperate as previously described in connection with blocking and unblocking door movement. Thus, all that need be done in installing the mechanism is to cut holes 75 in the frame 11 above the door pair, connect the support assemblies 65 in position with the channel members 67 projecting through the holes 75 and

mount the shafting and cams in the enclosure 74 formed by the frame 11.

I claim:

1. A multiple door latching system, comprising means including a hollow frame forming a plurality of door openings and a plurality of doors movable relative to said openings, said hollow frame having a plurality of apertures respectively facing said door openings, a plurality of like assemblies each inserted through one of said apertures from the door opening side thereof and attached to the frame, said assemblies including shoulders projecting into said door openings blocking rearward closing movement of the doors and a plurality of latches spaced from said shoulders blocking forward opening movement of the doors closed relative to said frame with portions of said latches extending outside the door peripheries, a mechanical means including a rotatable shaft concealed within the frame hollow and extending outside the door peripheries to the latches keeping them in door blocking relation and operable to simultaneously release the latches for upward movement out of said door blocking relation, said assemblies including elements carried by the frame and rearwardly displaced by the closed doors out of latch blocking relation and forwardly movable into under blocking relation with the released latches in response to opening of the doors for keeping the latches out of door blocking relation when the doors are open.

2. A multiple door latching system, comprising means including a hollow frame forming a plurality of door openings and a pair of doors movable relative to said openings, said hollow frame having an aperture facing said door opening, an assembly inserted through said aperture from the door opening side thereof and attached to the frame, said assembly including a shoulder projecting into said door opening blocking rearward closing movement of the doors and a pair of latches spaced forwardly of said shoulder blocking forward opening movement of the doors closed relative to the frame, said latches extending outside the door peripheries, and mechanical means including a rotatable shaft concealed within the frame hollow and extending outside the door peripheries to the latches keeping them in door blocking relation and operable to simultaneously release the latches for upward movement out of said door blocking relation, said assembly including elements carried by the frame and rearwardly displaced by the closed doors out of latch blocking relation and forwardly movable into under blocking relation with the released latches in response to opening of the doors for keeping the latches out of door blocking relation when the doors are open.

3. A multiple door latching system, comprising means including a hollow frame forming a plurality of door openings and a pair of doors movable relative to said openings, said hollow frame having a plurality of apertures respectively facing said door openings, a plurality of like assemblies each inserted through one of said apertures from the door opening side thereof and attached to the frame, said assemblies including shoulders projecting into said door openings blocking rearward closing movement of the doors and a pair of latches spaced from said shoulders blocking forward opening movement of the doors closed relative to the frame, said latches extending outside the door peripheries, mechanical means including a rotatable shaft concealed within the frame hollow and extending outside the door peripheries to the latches keeping them in door blocking relation and operable to simultaneously release the latches for upward movement out of said door blocking relation, said assemblies including elements carried by the frame and rearwardly displaced by the closed doors out of latch blocking relation and forwardly movable into under blocking relation with the released latches in response to opening of the doors for keeping the latches out of door locking relation when the doors are open and locking means obstructing movement of said mechanical means to prevent release of said latches from blocking relation with said door.

4. A multiple door latching system, comprising means including a hollow frame forming a plurality of door openings and a plurality of doors arranged in a row and movable relative to said openings, said hollow frame having a plurality of apertures respectively facing said door openings, a plurality of like assemblies each inserted through one of said apertures from the door opening side thereof and attached to the frame, said assemblies including shoulders projecting into said door openings blocking rearward closing movement of the doors and a plurality of movable latches spaced from said shoulders blocking forward opening movement of the doors relative to said frame when the doors remain closed with portions of said latches extending in a row outside and above the door peripheries, and mechanical means including an elongated rotatable shaft concealed within the frame hollow and extending outside and above the door peripheries to all the latches holding them in door blocking relation and operable to simultaneously release the latches for upward movement out of said door blocking relation and a manually actuable member movable remotely from at least some of the latches for operating said shaft said assemblies including elements carried by the frame and rearwardly displaced by the closed doors out of latch blocking relation and forwardly movable into under blocking relation with the released latches in response to opening of the doors for keeping the latches out of door blocking relation when the doors are open.

5. The invention as defined in claim 4 in which said mechanical means includes a rotatable shaft and cams movable in response to reverse shaft rotation to release upwardly said latches said cams being accessible for adjustment through said apertures prior to insertion of said assemblies therein.

6. The invention as defined in claim 5 in which said assemblies include horizontal plates connected with the frame.

7. The invention as defined in claim 6 comprising spring urged latches in engagement with said cams.

8. The invention as defined in claim 7 comprising cams shaped to displace the latches downwardly relative to said plates into door blocking relation in response to one-way shaft rotation.

9. The invention as defined in claim 6 comprising a manually actuable lever below the level of said shaft for rotating the shaft, and a linkage interconnecting the lever and shaft.

10. The invention as defined in claim 9 including a locking element obstructing pivoting of said lever to reversely rotate said shaft, said element being movable out of lever obstructing relation to free the lever for pivoting.

11. The invention as defined in claim 6 comprising pairs of doors arranged in a horizontal row and a horizontal frame extending over the doors.

12. The invention as defined in claim 11 in which a pair of latches are included in each of said assemblies, said latches being respectively movable downwardly by one of said cams into blocking relation with said doors.

13. The invention as defined in claim 12 in which said assemblies include springs urging said latches upwardly into engagement with said cams.

14. A multiple door latching system, comprising means including a hollow frame forming a plurality of door openings and a plurality of doors arranged in a row and movable relative to said openings, said hollow frame having a plurality of apertures respectively facing said door openings, a plurality of like assemblies each inserted through one of said apertures from the door opening side thereof and attached to the frame, said assemblies including shoulders projecting into said door openings blocking rearward closing movement of the doors and a plurality of movable latches spaced from said shoulders blocking forward opening movement of the doors rela-

tive to said frame when the doors remain closed with portions of said latches extending in a row outside and above the door peripheries, and mechanical means including an elongated shaft concealed within the frame hollow and extending outside and above the door peripheries to all the latches holding them in door blocking relation and operable to simultaneously release the latches for movement out of said door blocking relation and a manually actuable member movable remotely from at least some of the latches for operating said shaft, said mechanical means including a rotatable shaft and cams movable in response to reverse shaft rotation to release upwardly said latches, said cams being accessible for adjustment through said apertures prior to insertion of said assemblies therein, said assemblies including horizontal plates connected with the frame and elements displaced rearwardly by the closed doors out of latch blocking relation and movable forwardly into under blocking relation with all the upwardly released latches in response to opening of the doors for keeping the latches out of door blocking relation when the doors are open, said elements being carried beneath said plates.

15. The invention as defined in claim 14 in which said elements are engaged by the closed doors and are spring urged forwardly toward the doors.

References Cited in the file of this patent

UNITED STATES PATENTS

1,367,855	Bolles	Feb. 8, 1921
2,077,135	Walker	Apr. 13, 1937

FOREIGN PATENTS

207,081	Grea Britain	Nov. 22, 1923
495,196	Great Britain	Nov. 8, 1938
1,061,152	France	Nov. 25, 1953