(19) Europäisches Patentamt
European Patent Office
Office européen des brevets

(11) Publication number: **0 195 571 B1**

(12) # EUROPEAN PATENT SPECIFICATION

(45) Date of publication of patent specification: **20.05.92** (51) Int. Cl.5: **G11B 23/04**, G11B 25/10

(21) Application number: **86301668.9**

(22) Date of filing: **10.03.86**

(54) **Tape cartridge.**

(30) Priority: **18.03.85 US 713162**

(43) Date of publication of application:
24.09.86 Bulletin 86/39

(45) Publication of the grant of the patent:
20.05.92 Bulletin 92/21

(84) Designated Contracting States:
AT DE FR GB IT SE

(56) References cited:
EP-A- 0 214 820
EP-A- 0 219 950
DE-A- 1 572 496
DE-A- 2 357 812
FR-A- 1 181 649
FR-A- 2 161 529
GB-A- 636 993
US-A- 2 694 110
US-A- 3 285 527
US-A- 3 624 310
US-A- 4 031 555

(73) Proprietor: **Hewlett-Packard Company**
Mail Stop 20 B-O, 3000 Hanover Street
Palo Alto, California 94304(US)

(72) Inventor: **Henze, Richard H.**
611 Lancaster Way
Redwood City California 94061(US)
Inventor: **McConica, Charles Hastings**
7568 Gaylin Avenue
Windsor, Co 80550(US)
Inventor: **Clifford, George**
26789 Tanglewood Lane
Los Altos Hills California 94022(US)
Inventor: **Spenner, Bruce F.**
239 Jo Drive
Los Gatos California 95030(US)

(74) Representative: **Squibbs, Robert Francis**
Hewlett-Packard Limited Cain Road
Bracknell, Berkshire RG12 1HN(GB)

Note: Within nine months from the publication of the mention of the grant of the European patent, any person may give notice to the European Patent Office of opposition to the European patent granted. Notice of opposition shall be filed in a written reasoned statement. It shall not be deemed to have been filed until the opposition fee has been paid (Art. 99(1) European patent convention).

EP 0 195 571 B1

Description

This invention relates in general to data storage and more particularly to a tape cartridge for storing data.

Tape storage media are widely used to store large amounts of data that do not need to be rapidly accessed by a computer. Tape media are often used for archival storage and to store a duplicate copy of data in case the original data located in a computer is inadvertantly erased or damaged. This second function is referred to as "backup" storage.

Normally, to store data on tape requires an apparatus specifically designed to record data on tape. The added expense of acquiring such a tape storage apparatus to back up online disc-based memory is easily justified in large data processing system, but for small systems the additional expense can be a significant percentage of the total system cost. In the case of personal computers, the cost of the tape storage apparatus is of the same order as the cost of the personal computer. Therefore, personal computer users generally utilize inexpensive floppy discs for both backup storage and removable data storage. Backup storage can be effected by copying the original data onto floppy discs. Hard discs having capacities between 20 and 80 times the capacity of floppy discs are being used increasingly by personal computer users. Because it can be quite time consuming to copy data from a hard disc onto a set of floppy discs, it would be desirable to have a tape storage unit that is inexpensive relative to the cost of personal computers for large capacity, removable data storage. Such a device would be usable for backup of online storage, distribution of software or databases, or as a low cost, slow access type of online storage.

US patent specification US-A-3,624,310 discloses a tape cartridge which can be operatively engaged in a disc-drive unit for transferring data between a tape of the tape cartridge and a transducer head of the disc-drive unit, the cartridge including tape-feed means for feeding the tape and storage means for storing the tape. In this prior art system, the disc drive unit is a stylus-type record player. In order to permit data on the tape (analog audio signals) to be reproduced through the playback electronics of the record player, a tape read-head is positioned to read the tape, the output of the tape read-head being used to drive an electro-mechanical vibrator which is physically coupled to the stylus of the record player. Clearly, this prior art system is not suited to transferring digital data through a computer disc drive to a back-up tape.

According to the present invention, there is provided a tape cartridge operatively engageable in a disc drive unit for transferring data between a tape of the tape cartridge and a transducer head of the disc-drive unit, the cartridge including tape-feed means for feeding the tape and storage means for storing the tape, characterised in that the tape of the cartridge is of a form enabling data to be directly written on and/or read from the tape by the head of said disc-drive unit, and the cartridge further includes locating means for registering a portion of the tape at a predetermined location at which data can be transferred directly between the tape and the disc-drive head.

Preferably, the tape cartridge comprises a tape feed/storage section and a section with an external shape and size which allows it to be inserted into the disc drive to enable the tape to be placed in the vicinity of the read/write head(s). For most disc drives, this latter section has a disclike shape (that is, the shape of a normal disc package).

The tape media can be any media which is compatible with the read/write scheme of the disc drive with which the tape cartridge is to be utilized. Present generation floppy disc drives would require a magnetic tape with magnetic properties suitable for operation with the disc drive's magnetic read/write head(s). These tapes can include a backing layer to increase wear resistance, to reduce friction, and/or to reduce static electric charge. For disc drives utilizing other schemes of recording materials such as magneto-optic media or optical discs, the tape should include a compatible type of recording material.

The means for registering the tape with respect to the read/write head(s) of the disc drive will generally comprise two components, namely: guide elements guiding the tape and/or changing the direction of the tape travel; and means for aligning the elements with respect to some valid reference frame in the disc drive. These alignment means assure that the tape is accurately positioned with respect to the read/write head(s) and is travelling along the correct path as it passes near the read/write head(s).

The tape media can be stored in a variety of ways, including: two spools which alternately wind and rewind a length of tape; an endless loop configuration which stores the tape around a spool or a series of spools; a compartment of packed tape (endless loop or reversing length); or a simple continuous band of tape.

For embodiments that do not contain an endless loop of tape, read/write operations are either all in one direction, or in alternating directions depending upon the capabilities of the disc drive head(s). When the tape cartridge is used with a disc drive that will transfer data in either direction of tape travel, half of the tracks will be recorded in one direction and the other half will be recorded in

the other direction, thereby eliminating the need to rewind the tape between data transfer on successive tracks. In disc drives that can only transfer data in one direction, the tape is rewound at the end of each track, the read/write head(s) are translated lateral to the tape feed direction to locate the head over the next track to be read or recorded, and then the data transfer process is continued.

There are many well known mechanisms for feeding tape. These mechanisms typically include a motor, a drive element in direct contact with the tape, and a transmission between this element and the motor. Suitable drive elements include a takeup spool that is winding up the tape, a capstan, a capstan/pressure wheel combination, or a contact belt. The motor can be included in the tape cartridge or can be external to it. In some embodiments the disc drive spindle motor is utilized to move the tape past the read/write head(s).

The main limitation on the choice of transmission is its size. This is particularly true when the disc drive spindle motor is utilized to move the tape because the tape cartridge will usually be restricted in size in the region of the spindle motor. The transmission should also be efficient and steady in transmitting power because of the fairly low power of typical disc drive spindle motors and because of the need to minimize perturbations in tape velocity and edge location as the tape moves past the read/write head(s). Some suitable choices for a transmission include various types of belts, gears, worm gears, friction wheels, eccentric and link combinations, flexible cables, rigid shafts, or some combination of these or other means. When the motor can rotate in only one direction, and two spools are used for storing the tape media, the transmission can also include a clutch mechanism for reversing the direction of tape motion.

For cartridges requiring reversal of tape direction, commands to reverse direction can be transmitted to the tape cartridge via the disc drive spindle, head actuator, or head loading motors. Since the tape cartridge can include a battery or can be electrically connected to the disc drive or some other source of electrical power, embodiments of the transmission and clutch can have electrical components as well as mecahnical components. Likewise, the motion of the tape can be effected by an electrical motor that is part of the tape cartridge, powered by a battery or by an external electrical connection. For disc drives which are specifically designed to accommodate both discs and tape cartridges of the present invention, the disc drive can contain electrical contacts to provide electrical power and/or control information to the tape cartridge.

Tape and disc drive devices typically have some feedback loops to adjust for variation in the speed of the media. Such feedback can adjust the speed of the media or can adjust the rate of reading and writing -- the purpose of the feedback being generally only to maintain the ratio between media speed and read/write rate at a substantially constant value. For example, in many disc drives, the disc drive controller adjusts the read rate in response to transitions on the disc. This disc drive controller may similarly adjust the read rate in response to data transitions on the tape in the tape cartridge. Therefore, it is only necessary to ensure that the variations in the speed of the tape past the read/write head(s) are within the response limits of the disc drive controller's read/write rate feedback loop. To help assure this, parameters of the tape media, tape guidance system, and tape feeding system can be selected to closely emulate the parameters of the associated disc.

The nature of the data stored on the tape is determined by the means with which the disc drive head(s) store data on a disc. If the read/write head(s) store data in a bit serial fashion, then data is stored on the tape in this way. Similar compatabilty between the means of data storage on a disc, and on the tape in the tape cartridge would exist whether this means was data storage in a parallel fashion, with signal amplitude modulation, or with signal frequency modulation. Any data encoding schemes that the disc drive system uses in storing data on a disc (for example, MFM data encoding which is sometimes used to encode digital data onto magnetic discs) would be identically implemented with data stored on the tape in the tape cartridge.

Data formats, which describe how the data is organised on a disc or on the tape cartridge, include such parameters as number of data tracks, number of sectors per track, number of bytes per sector, sector header information, and extra coding for error detection. These parameters are set up by the disc drive's controller. A format for the tape, and other parameters which the disc drive controller uses, such as interleave factors, would not necessarily be identical to that of a disc. The primary difference is that the tape cartridge would need many more sectors per track and/or longer sectors to take advantage of the increased capacity of the tape media. Therefore, a means for temporarily changing these parameters in the disc drive controller when performing data storage with the tape cartridge is necessary for utilization of the increased capacity of the tape cartridge. These changes would be implemented either through software control via the host computer's operating system, or by changing a controller ROM which contains these parameters. The optimum means of

doing this, and the specific parameters chosen, depends on the specific controller, operating system, and disc drive present.

A disc-drive-compatible tape cartridge embodying the invention will now be particularly described, by way of example, with reference to the accompanying diagrammatic drawings, in which:

Figure 1 is a bottom view of a standard 3.5 inch microfloppy disc cassette such as is currently used to store data in a 3.5 inch microfloppy disc drive;

Figure 2 is a top view, with cover removed, of that portion (denoted Section A) of the tape cartridge which fits inside a 3.5 inch microfloppy disc drive and which contains means for registering the tape with respect to the disc drive head(s);

Figure 3 is a cross-sectional view taken on line "Fig 3 - Fig 3" of Fig 2;

Figure 4 is a bottom view of the portion of the tape-cartridge shown in Figure 2;

Figure 5 is a top view, with cover removed, of one embodiment of the portion of the tape cartridge that serves for feeding and storing the tape media in the tape cartridge, this embodiment utilizing a two-ended tape length and including a reversing clutch;

Figure 6 is an enlarged view of a helical slider forming part of the reversing clutch of the Figure 5 embodiment;

Figures 7a-c illustrate the operation of the reversing clutch shown in Figure 5;

Figure 8 is a top view, with cover removed, of a second embodiment of the portion of the tape cartridge that serves for feeding and storing the tape media in the tape cartridge; this embodiment utilizing an endless loop of tape; and

Figure 9 is a detail view of a tape wrapping around a twist tape guide of the Figure 8.

Two embodiments of the disc-drive-compatible tape cartridge will be presented in the following discussion. Both are intended for use with a standard 3.5 inch microfloppy disc drive. Embodiments with similar functional components could potentially be implemented for utilization with other sizes of disc drives. The primary difference between the two embodiments is that the first includes a length of tape with two ends, while the second utilizes an endless loop of tape. These implementations affect how the tape is driven and stored in each case. They have little impact however, on the actual tape media used, and how it is registered with respect to the disc drive. Therefore, the discussion of the tape media and its registration will be common to both transport/storage embodiments.

The section of the tape cartridge which registers the tape with respect to the disc drive heads, and is inserted into the disc drive to gain access to the heads, is shown in Figures 2-4 and is referred to as Section A. The section of the tape cartridge used to store and feed the tape is referred to as the feed/storage section. The feed/storage section in a tape cartridge embodiment utilizing a reversing length of tape is shown in Figure 5 and is referred to as Section B. The feed/storage section in an embodiment utilizing an endless loop of tape is shown in Figure 8 and is referred to as Section C. Hence, the first tape cartridge embodiment is comprised of Sections A and B, and the second embodiment is comprised of Sections A and C.

In the following discussion, the same reference number will be utilized for the same element shown in more than one figure. The first digit of each reference number will indicate the first figure in which that element is referenced. It will be useful here to introduce some definitions for use in subsequent discussion. The "disc drive head" is the mechanism for reading and/or writing data on an associated data recording medium. The tape typically has a "length", "width", and "thickness" such that its length (typically several feet) is much greater than its width (of the order of 3/4 inch or 19mm), and its width is much greater than its thickness (of the order of 0.0005 inch or 12.7×10^{-3}mm). Therefore the tape can be viewed as a two dimensional surface extending in the directions of its length and width. "Feeding" a tape shall mean to translate it in the direction of its length. At a given point in the tape, the "plane of the tape" shall mean that plan that is tangent to this two dimensional surface at that point. A "tape guide" shall be any element which modifies the "plane of the tape" or the position of the edge of the tape as the tape feeds over the guide. If a tape guide modifies the plane of the tape such that the tape path is twisted around the tape guide, the tape guide shall be referred to as "twist tape guide."

The tape media used is nominally .75(19mm) inches wide. This allows one of the disc drive heads to access 80 tracks, the maximum number used by standard 3.5 inch disc drives. The tape has a magnetic coating with a coercivity and thickness capable of supporting magnetic transitions written by the disc drive head at its normal data rate, at the speed which the tape is traveling. A back coating may be used if it provides benefits (e.g., reduced friction, increase wear resistance and/or reduce static electric charge) to the means for tape feed, storage, or registration. If the tape is stored wrapped upon itself, this back coating must be non-magnetic to avoid print over. As 3.5 inch disc drives implement figure increases in linear density due to changes in their head/media systems, the tape media may be changed in a similar manner to the disc media. This will allow the tape

media to support identical increases in linear density, which will result in increased capacity and/or performance of the tape cartridge.

Figure 1 is at bottom view of a standard 3.5 inch microfloppy disc cassette. The dashed circle represents the disc media inside the cassette. The hatched area is an autoshutter. This is a protective cover that slides when the disc cassette is inserted into the disc drive, so an opening in the autoshutter is aligned with a matching opening in the casette, allowing the disc drive heads to access the disc media. The shutter is shown in the open position. The half filled rectangle in the top right corner of the cassette in Figure 1 is a write protect switch. This switch position is read by a sensor in the disc drive, and allows the disc drive to recognize a write protected disc cassette.

Figures 2-4 Section A of the tape cartridge. Because Section A is intended to fit inside a 3.5 inch microfloppy disc drive, its dimensions must be suitably close to those of a 3.5 inch microfloppy disc cassette (90 mm wide, 94 mm long, and 3.3 mm thick), so that it fits properly with the cassette loading mechanism of the disc drive. In general, this requires that section A have disclike shape suitable for fitting though the slot in the front of typical disc drives. The tape media 20 enters Section A from the tape supply location 21. Tape is fed from location 21 to twist tape guide 22, past a location L at which data is written to or read from the tape by the disc drive head(s) (somewhere along dotted line 25), to twist tape guide 23, and out of Section A to the tape take-up location 24. In general, location L is the location at which reading and writing occur and in some disc drives, such as optical disc drives, may not be adjacent to the read/write head(s).

In embodiments where a finite length of tape is used, such as that depicted as Section B, the tape is fed from supply location 21 to take-up location 24. The supply and take-up then switch positions. This reverses the direction of the tape feed to rewind the tape. Once the tape is rewound, the supply and take-up revert to their original positions and the cycle is repeated. The means of this switching will be outlined in the discussion of Section B.

Twist tape guides 22 and 23 are oriented at nominally 45 degrees to the direction of feed of the tape. At each twist tape guide, the tape wraps substantially 180 degrees around the guide in a helical fashion, which changes the path of feed of the tape by 90 degrees and rotates the normal to the plane of the tape by 180 degrees. This manner of guiding the tape within Section A keeps the tape within a disclike region that has a size and shape that enable Section A to fit through the slot in the front of many typical disc drives. These guides enable the tape to enter section A, gain proper access to location L and exist section A while remaining within the volume defined by Section A. In this manner, the tape passes across the disc drive heads, which are located along line 25, with a motion similar to that of the disc media.

Several other tape guides 26 provide a reference edge which acts to register the tape, and/or provide a wrap angle to change the plane of the tape. These tape guides 26 are in several locations: between tape supply location 21 and twist tape guide 22; between twist tape guides 22 and 23; and between twist tape guide 23 and tape take-up location 24. In instances where tape guide 26 provides a reference edge to register the tape, a force is exerted on the tape to constrain one of its edges to the reference edge of the tape guide 26. This force may be exerted on the tape either by deliberate misalignment of twist tape guides 22 and 23, by the shape of twist tape guides 22, 23, and/or tape guide 26, and/or by a spring loaded surface acting on the nonreference edge of the tape. All of the tape guides and drive elements which contact the tape are fabricated from a non-magnetic material such as non-magnetic stainless steel or a ceramic material.

In the embodiments shown, the power to feed the tape is derived from the disc drive spindle motor. As is illustrated in Figure 4, near the center of section A is a cyclindrical hub 27 containing a circular hole 43 at the center of the hub and a second hole 44 away from the center of the hub. When the tape cartridge is loaded into a 3.5 inch disc drive, hole 43 is located onto the circular shaft of the disc drive spindle motor. As the disc drive spindle motor rotates, a spring loaded pin from the motor hub assembly extends into hole 44. By this means, power from the disc drive spindle motor is transmitted to hub 27 in the tape cartridge. The tape cartridge is enclosed by a protective shell 29. A hole 42 in the lower surface of the protective shell 29 allows the spindle motor hub assembly to access hub 27. Openings 212 in both the upper and lower surfaces of shell 29 provide access to the tape along line 25 by the disc drive heads. These openings 212 are protected by a sliding piece 40 which contains openings 41 in its upper and lower surfaces. During use of the tape cartridge, sliding piece 40 is located such that openings 41 are positioned adjacent to openings 212. This sliding piece is essentially identical in appearance and function to the "auto shutter" on a 3.5 inch microfloppy disc cassette and movement of sliding piece 40 is effected in the same manner as for the auto shutter. A write protect switch 45 operates in a similar manner to the write protect switch of a disc cassette, and interacts identically with the sensor in the disc drive that determines

the state of this switch. The protective shell also includes a rotary bearing 28 whose inner race rotates with hub 27 and whose outer race remains fixed, thereby isolating the rotary motion of hub 27 from the stationery part of the tape cartridge.

To ensure that the tape is accurately registered with the read/write heads, it is important that the tape cartridge be reproducibly aligned with some reference frame in the disc drive. In general, registration of the tape requires that the tape be fed past location L with an accurate positioning of the tape and a proper direction of feed of the tape. This is achieved by including within the tape cartridge a set of guide pins to accurately guide the tape within the tape cartridge with the disc drive (and in particular, with location L). In the bottom of the protective shell of the microfloppy disc cassette used in 3.5 inch microfloppy disc drives, there is a pair of holes tha extend part way through the shell. When the microfloppy disc cassette is loaded into the disc drive, these holes fit over a pair of pins to partially control the vertical location of the disc cassette in the disc drive. These pins are suitable as both vertical and translational reference points in the disc drive for the purpose of aligning the tape cartridge. Therefore, the tape cartridge includes a pair of holes 210 and 211 in the bottom surface of the protective shell 29 that are positioned to fit over the pair of pins in the disc drive unit.

The slot shaped hole 211 provides a tight clearance fit over the associated pin in the disc drive. Holes 211 and 43 provide the angular and vertical reference for the tape cartridge. Hole 210 provides a loose clearance fit over the associated pin in the disc drive and provides only vertical reference for the tape cartridge. The remainder of the translational location is determined by the right clearance fit of hole 43 to the disc drive spindle motor's circular shaft. Two additional pins located inside the disc drive near the disc drive's cassette opening also provide vertical support to either a microfloppy disc cassette or the tape cartridge.

Because the tape cartridge is reproducibly aligned to the disc drive via holes 43, 210, and 211, tape guides 22, 23 and 26 must be accurately positioned with respect to these registration holes. The runout of bearing 28 must also be accounted for in tolerance accumulation to ensure that tape 20 is accurately aligned with the disc drive heads.

In both embodiments shown, the disc drive spindle motor is used as a power source to feed the tape. Hub 27 contains a pulley which drives belt 213. Belt 213 is used to transmit power from hub 27 to the tape driving element in either Section B or Section C. If the disc drive spindle motor has insufficient power or is otherwise unsuitable for driving the tape, either of these embodiments may function in an identical fashion using a dedicated motor contained within the tape cartridge, or some other suitable power source, to drive the tape.

A feed/storage section, denoted as Section B, utilizing a pair of supply/takeup spools 51 and 52 is shown in Figure 5. One end of the tape media 20 is fixed onto spool 51, and the other is fixed onto spool 52. The tape media is alternately wound from one spool, that serves as a supply spool, through Section A, and onto the other spool, which serves as a take-up spool. In Figure 5, the tape supply location 21 is on spool 51, while spool 52 is being driven to act as the tape take-up location 24. This is the direction of tape travel in which data is written or read. Currently, standard 3.5 inch disc drive heads are capable of data transfer only when the media is traveling in one direction. Hence the other direction of tape travel is for rewind. If future changes in head design allow for bi-directional data transfer, both directions of tape travel will accommodate data transfer.

In this embodiment, power is derived from the disc drive spindle motor via belt 213. Because the spindle motor turns only in one direction, the direction of tape travel must be reversed by means of a toggling clutch located on a spool shaft 50 on which tape spools 51 and 52 are free to rotate. A sliding pulley 53, which is driven by belt 213, is engaged by means of teeth 60 (as illustrated in greater detail in Figure 6) with the teeth in either of a pair of helical sliders 54 and 55. Each helical slider is rotatably mounted on shaft 50 and is connected by a torsion spring 63 to an associated one of spools 51 and 52. Through this arrangement, power is transmitted from the disc drive motor to the current take-up spool.

Figure 6 shows a detail of one of the helical sliders 54 and 55. Each helical slider has a hollow sleeve that can rotate about an extension 64 of its respective spool, 51 or 52. A pair of pins 61 are rigidly attached to extension 64 and pass through a helical slot 62 in the slider. When the tape is fully expended from the supply spool, the attachment of the ends of the tape to the take-up spool and to the supply spool prevents additional feed of the tape, thereby preventing the take-up spool from further rotation. As the driven sliding pulley continues to turn, the helical slider to which it is engaged is forced to rotate about shaft 50. Because shaft 50 is rigidly mounted to shell 211, as the helical slide rotates, it unscrews itself and the sliding pulley away from the take-up spool by slot 62 riding on the pins 61. The angle of the teeth 60 is steeper than that of the helical slot 62, to ensure that the teeth do not disengage preferentially to the helical translation of the pin/slot combination. As the sliding pulley is pushed past center, an over-center device 56 is activated. This over-center device 56

is spring loaded by spring 57, and is coupled to the sliding pulley by roller 58. The over-centre device pushes the sliding pulley toward the other spool, which then engages its teeth with the new take-up spool and helical slider. Figures 7a-c illustrate this process. This action frees the old helical slider, which is then retracted to the old take-up spool by means of the spring 63 attached at one end to the pin 61 and at the other end to a flange 65 which is part of the helical slider 54 or 55. This tape feed reversing process repeats itself each time the end of the tape is reached.

The feed/storage embodiment denoted as Section C is shown in Figure 8. The tape media 20 enters Section C from Section A at location 24. The tape wraps around twist guide 80 in such a manner as to execute a half twist. Orientation of the tape is changed from nominally co-planar with Section A upon entering the guide, to nominally on its edge, traveling in a nearly transverse direction, as it exits the guide. A looping arrow in Figure 8 shows this change in direction. Twist guide 81 is identical to 80, however it is oriented to perform the inverse directional change on the tape. Figure 9 is a detail of these guides. After exiting twist guide 80, the tape feeds on its edge onto the outside of a spool of tape defined by the perimeter of rollers 8285. As the tape is fed, it continually spirals inward until the inside strand of tape wraps more completely around roller 84, and into the center of the spool.

This embodiment shows a capstan 86 deriving power from the disc drive spindle motor via belt 213 wrapped around a pulley fixed to the capstan. An idling pinch roller 87 is supported by idler arm 88. The idler arms pivots about pin 89 such that the pinch roller is loaded against the capstan by spring 810. In this manner a friction drive is provided to feed the tape. From here the tape wraps around twist guide 81, which reorients the tape nominally co-planar with Section A as it exits Section C.

In all endless loop embodiments, the tape travels in one direction only, therefore no reversing clutches are required. This scheme is inherently more time efficient with current 3.5 inch microfloppy disc drives because no time is required to rewind the tape. Due to the extra tape twisting required however, and the friction that may be associated with guiding this twisting, a more powerful motor may be required than in embodiments utilizing a reversing length of tape. Other endless loop embodiments may differ in the relative location of the drive element, the spool hub(s) drive, and the geometry of the tape twisting action. However all of these embodiments are basically comprised the same functional elements.

Claims

1. A tape cartridge operatively engageable in a disc-drive unit for transferring data between a tape (20) of the tape cartridge and a transducer head of the disc-drive unit, the cartridge including tape-feed means (213, 53 to 55) for feeding the tape (20) and storage means (51, 52) for storing the tape (20), **characterised** in that the tape (20) of the cartridge is of a form enabling data to be directly written on and/or read from the tape (20) by the head of the disc-drive unit, and in that the cartridge is provided with locating means (22, 23, 26, 43, 210, 211) for registering a portion of the tape (20) at a predetermined location (L) at which data can be transferred directly between the tape (20) and the transducer head.

2. A tape cartridge according to claim 1, wherein said locating means comprises:

   cartridge-alignment means (43, 210, 211) for aligning the tape cartridge with the disc-drive unit when the tape cartridge is loaded into the disc-drive unit; and guide means (22, 23, 26) for guiding the tape (20) within the tape cartridge such that, when the tape cartridge is aligned with the disc drive unit, the tape (20) is registered at said predetermined location (L).

3. A tape cartridge according to claim 2, further comprising:

   a protective shell (29) enclosing the tape (20), said shell having a bottom portion that includes therein at least two holes (43, 211) located such that, when the tape cartridge is loaded into the disc drive unit, each of the holes (43, 211) fits over a corresponding projection in the disc drive unit and aligns the tape cartridge with the unit.

4. A tape cartridge according to claim 3 for use with a disc drive unit having a motor shaft, wherein one (43) of said holes in the bottom portion or the shell (29) is arranged to fit over the motor shaft, whereby the motor shaft functions as one of the said predetermined drive projections utilized to align the tape cartridge with said predetermined location (L).

5. A tape cartridge according to claim 2, wherein the tape cartridge includes a section (A) that is insertable into the disc drive unit, the tape (20) within said section (A) being contained within a substantially planar region.

6. A tape cartridge according to claim 5 wherein, within said section (A), the guide means comprises a plurality of twist tape guides (22, 23) the tape (20) wrapping about each of said twist tape guides (22, 23) by substantially 180 degrees to change the direction of feed of the tape (20) and to rotate the normal to the plane or the tape by substantially 180 degrees.

7. A tape cartridge according to claim 1, wherein the storage means comprises a first spool (51) and a second spool (52) between which the tape (20) is wound.

8. A tape cartridge according to claim 1, wherein the storage means comprises means (82 to 85) for storing the tape as an endless tape loop.

9. A tape cartridge according to claim 1, wherein the tape feed means comprises:
tape-driving means (51, 52), in contact with the tape (20), for driving the tape; and
a transmission (213, 53 to 55) for coupling power from a motor to the tape-driving means (51,52).

10. A tape cartridge according to claim 9, wherein said transmission includes a clutch (54, 55, 56) for reversing the direction in which the tape (20) is fed past said predetermined location (L).

11. A tape cartridge according to claim 9 or claim 10 wherein the transmission is arranged to transfer power to the tape-driving means from a drive motor of the disc drive unit.

12. A tape cartridge according to claim 9 or claim 10, further comprising a tape-cartridge motor, said transmission being arranged to transmit power from the tape-cartridge motor to said tape-driving means.

13. A tape cartridge according to any one of claims 9 to 12, wherein the tape-driving means comprises a first spool (51) and a second spool (52), said spools being rotatably drivable via said transmission to wind the tape (20) from one spool to the other, said spools also functioning as the tape-storage means.

Revendications

1. Une cassette à bande pouvant être engagée fonctionnellement dans un appareil à disque pour transférer les données entre une bande (20) de la cassette et une tête transductrice de l'appareil à disque, la cassette comprenant des moyens d'avancement de bande (213, 53 à 55) pour faire avancer la bande (20) et des moyens de support (51, 52) pour supporter la bande (20), caractérisée en ce que la bande (20) de la cassette a une forme permettant à des données d'être directement écrites et/ou lues sur la bande (20) par la tête de l'appareil à disque, et en ce que la cassette est pourvue de moyens de positionnement (22, 23, 26, 43, 210, 211) pour centrer une partie de la bande (20) dans une position prédéterminée (L) où une donnée peut être transférée directement entre la bande (20) et la tête d'appareil à disque.

2. Une cassette à bande selon la revendication 1, dans laquelle lesdits moyens de positionnement comprennent :
- des moyens d'alignement de cassette (43, 210, 211) pour aligner la cassette à bande avec l'appareil à disque lorsque la cassette à bande est chargée dans l'appareil à disque ; et
- des moyens de guidage (22, 23, 26) pour guider la bande (20) à l'intérieur de la cassette de telle sorte que, quand la cassette à bande est alignée avec l'appareil à disque, la bande (20) soit centrée dans ladite position prédéterminée (L).

3. Une cassette à bande selon la revendication 2, comprenant en outre :
- une coquille protectrice (29) entourant la bande (2), ladite coquille comportant une partie de base qui est pourvue d'au moins deux trous (43, 211) positionnés de telle sorte que, lorsque la cassette à bande est chargée dans l'appareil à disque, chacun des trous (43, 211) s'engage sur une saillie correspondante prévue dans l'appareil à disque et aligne la cassette à bande avec cet appareil.

4. Une cassette à bande selon la revendication 3, utilisable avec un appareil à disque comportant un arbre de moteur, cassette dans laquelle un (43) desdits trous (43) prévus dans la partie de base de la coquille (29) est agencé de manière à s'engager sur l'arbre de moteur, cet arbre de moteur agissant comme une desdites saillies prédéterminées d'entraînement qui sont utilisées pour aligner la cassette à bande avec ladite position prédéterminée (L).

5. Une cassette à bande selon la revendication 2, où la cassette à bande comprend une section (A) qui peut être insérée dans l'appareil à

disque, la bande (20) étant disposée, à l'intérieur de ladite section (A), dans une zone sensiblement plane.

6. Une cassette à bande selon la revendication 5, dans laquelle, à l'intérieur de ladite section (A), les moyens de guidage comprennent une pluralité de guides de torsion de bande (22, 23), la bande (20) s'enroulant autour de chacun desdits guides de torsion (22, 23) de sensiblement 180 degrés pour changer la direction d'avancement de la bande (20) et pour faire tourner la normale au plan de la bande sensiblement de 180 degrés.

7. Une cassette à bande selon la revendication 1, dans laquelle les moyens de support de bande comprennent une première bobine (51) et une seconde bobine (52) entre lesquelles la bande (20) est enroulée.

8. Une cassette à bande selon la revendication 1, dans laquelle les moyens de support de bande comprennent des moyens (82 à 85) pour supporter la bande sous la forme d'une boucle de bande sans fin.

9. Une cassette à bande selon la revendication 1, dans laquelle les moyens d'avancement de bande com - prennent :
   - des moyens d'entraînement de bande (51, 52) en contact avec la bande (20), pour entraîner la bande ; et
   - une transmission (213, 53 à 55) pour transmettre de l'énergie d'un moteur aux moyens d'entraînement (51/52).

10. Une cassette à bande selon la revendication 9, dans laquelle ladite transmission comprend un embrayage (54, 55, 56) pour inverser la direction dans laquelle la bande (20) est avancée devant ladite position prédéterminée (L).

11. Une cassette à bande selon la revendication 9 ou la revendication 10, dans laquelle la transmission est agencée pour transmettre de l'énergie aux moyens d'entraînement de bande à partir d'un moteur d'entraînement de l'appareil à disque.

12. Une cassette à bande selon la revendication 9 ou la revendication 10, comprenant en outre un moteur de cassette à bande, ladite transmission étant agencée pour transmettre de l'énergie du moteur de cassette auxdits moyens d'entraînement de bande.

13. Une cassette à bande selon une quelconque des revendications 9 à 12, dans laquelle les moyens d'entraînement de bande comprennent une première bobine (51) et une seconde bobine (52), lesdites bobines pouvant être entraînées en rotation par l'intermédiaire de ladite transmission pour enrouler la bande (20) d'une bobine sur l'autre, lesdites bobines fonctionnant également comme les moyens de support de bande.

Patentansprüche

1. Eine mit einer Plattenantriebseinheit in einen wirksamen Eingriff bringbare Bandkassette zum Übertragen von Daten zwischen einem Band (20) der Bandkassette und einem Übertragerkopf der Plattenantriebseinheit, wobei die Kassette eine Bandzuführeinrichtung (213, 53 bis 55) zum Zuführen des Bandes (20) und eine Speichereinrichtung (51, 52) zum speichern des Bandes (20) aufweist, dadurch gekennzeichnet, daß das Band (20) der Kassette eine Form aufweist, die es ermöglicht, Daten durch den Kopf der Plattenantriebseinheit direkt auf das Band (20) zu schreiben und/oder von diesem zu lesen, und daß die Kassette mit einer Lokalisierungseinrichtung (22, 23, 26, 43, 210, 211) zum Registrieren eines Teiles des Bandes (20) an einem bestimmten Ort (L), an dem Daten direkt zwischen dem Band (20) und dem Übertragerkopf übertragen werden können, versehen ist.

2. Eine Bandkassette gemäß Anspruch 1, bei der die Lokalisierungseinrichtung aufweist:

   Eine Kassettenausrichteinrichtung (43, 210, 211) zum Ausrichten der Bandkassette mit der Plattenantriebseinheit, wenn die Bandkassette in die Plattenantriebseinheit geladen wird; und

   eine Führungseinrichtung (22, 23, 26) zum Führen des Bandes (20) innerhalb der Bandkassette derart, daß bei Ausrichtung der Bandkassette mit der Plattenantriebseinheit das Band (20) an dem vorbestimmten Ort (L) registriert wird.

3. Eine Bandkassette gemäß Anspruch 2, ferner mit:

   Einem Schutzgehäuse (29), welche das Band (20) umgibt, wobei das Gehäuse einen Bodenabschnitt hat, der darin wenigstens zwei Löcher (43, 211) aufweist, die derart angeordnet sind, daß bei der in der Plattenantriebseinheit geladenen Kassette jedes der Löcher (43, 211)

über einen entsprechenden Vorsprung in der Plattenantriebseinheit paßt und die Bandkassette mit der Einheit ausrichtet.

4. Eine Bandkassette gemäß Anspruch 3 zur Verwendung mit einer eine Motorwelle aufweisenden Plattenantriebseinheit, bei der eines (43) der Löcher in dem Bodenabschnitt des Gehäuses (29) angeordnet ist, um über die Motorwelle zu passen, wodurch die Motorwelle als einer der vorbestimmten Antriebsvorsprünge wirkt, die verwendet werden, um die Bandkassette mit dem vorbestimmten Ort (L) auszurichten.

5. Eine Bandkassette gemäß Anspruch 2, bei der die Bandkassette einen Abschnitt (A) hat, der in die Plattenantriebseinheit einsetzbar ist, wobei das Band (20) innerhalb des Abschnittes (A) in einem im wesentlichen planen Bereich aufgenommen ist.

6. Eine Bandkassette gemäß Anspruch 5, bei der innerhalb des Abschnittes (A) die Führungseinrichtung eine Mehrzahl von Verdrehungsbandführungen (22, 23) aufweist, wobei das Band (20) sich um jede der Verdrehungsbandführungen (22, 23) um im wesentlichen 180° herumwickelt, um die Zuführungsrichtung des Bandes (20) zu ändern und um die Senkrechte auf die Ebene des Bandes um im wesentlichen 180° zu drehen.

7. Eine Bandkassette gemäß Anspruch 1, bei der die Speichereinrichtung eine erste Spule (51) und eine zweite Spule (52) umfaßt, zwischen denen das Band (20) gewickelt ist.

8. Eine Bandkassette gemäß Anspruch 1, bei der die Speichereinrichtung eine Einrichtung (82 bis 85) zum Speichern des Bandes als endlose Bandschleife aufweist.

9. Eine Bandkassette gemäß Anspruch 1, bei der die Bandzuführeinrichtung aufweist:

Eine Bandantriebseinrichtung (51, 52), die in Kontakt mit dem Band (20) steht, um dieses anzutreiben; und

ein Getriebe (213, 53 bis 55) zum Koppeln der Leistung von einem Motor an die Bandantriebseinrichtung (51, 52).

10. Eine Bandkassette gemäß Anspruch 9, bei der das Getriebe eine Kupplung (54, 55, 56) zum Umkehren der Richtung, in die das Band (20) nach dem vorbestimmten Ort (L) geführt wird, aufweist.

11. Eine Bandkassette gemäß Anspruch 9 oder Anspruch 10, bei der das Getriebe angeordnet ist, um Leistung zu der Bandantriebseinrichtung von einem Antriebsmotor der Plattenantriebseinheit zu übertragen.

12. Eine Bandkassette gemäß Anspruch 9 oder Anspruch 10, ferner mit einem Bandkassettenmotor, wobei das Getriebe angeordnet ist, um Leistung von dem Bandkassettenmotor zu der Bandantriebseinrichtung zu übertragen.

13. Eine Bandkassette gemäß einem der Ansprüche 9 bis 12, bei der die Bandantriebseinrichtung eine erste Spule (51) und eine zweite Spule (52) aufweist, wobei die Spulen drehbar mittels des Getriebes antreibbar sind, um das Band (20) von einer Spule auf die andere zu wickeln, wobei die Spulen als Bandspeichereinrichtung wirken.

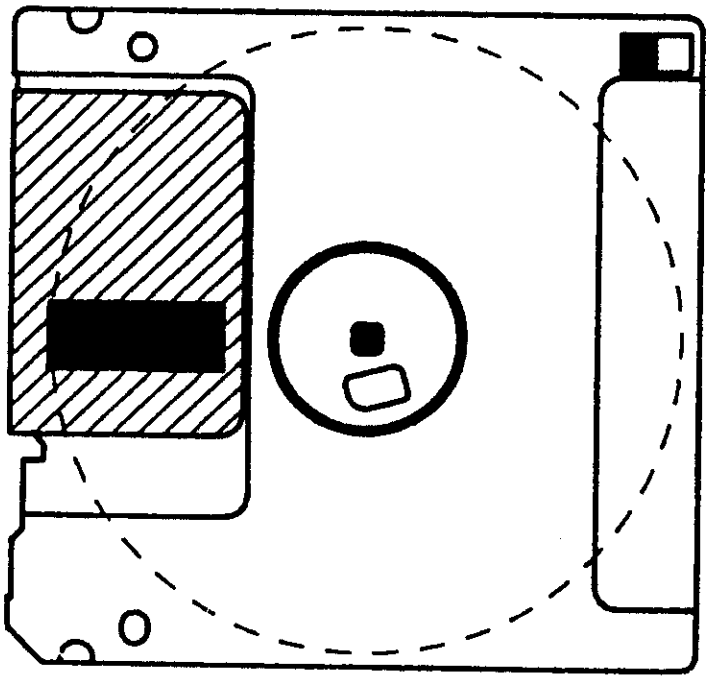

FIG 1 (PRIOR ART)

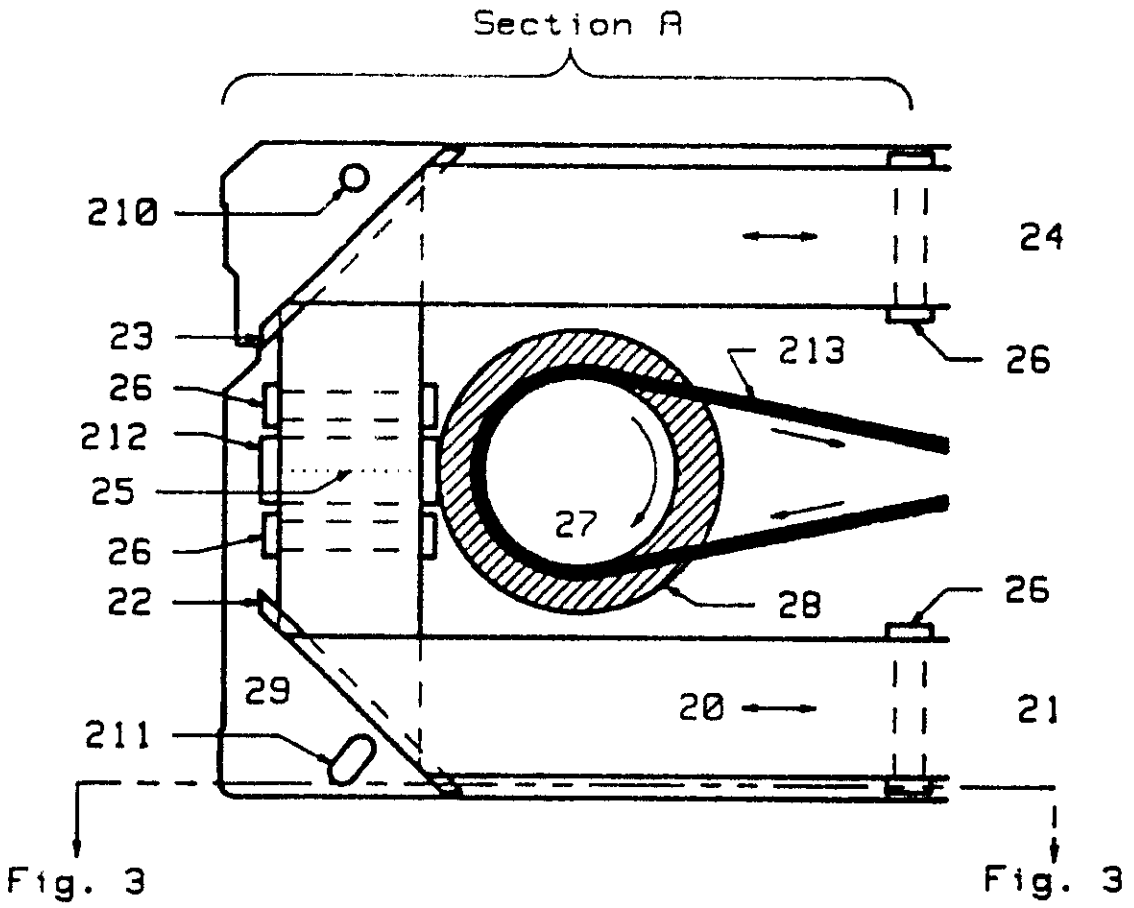
Section A
210
23
26
212
25
26
22
29
211
24
213
26
27
28
26
20
21
Fig. 3
Fig. 3

FIG 2

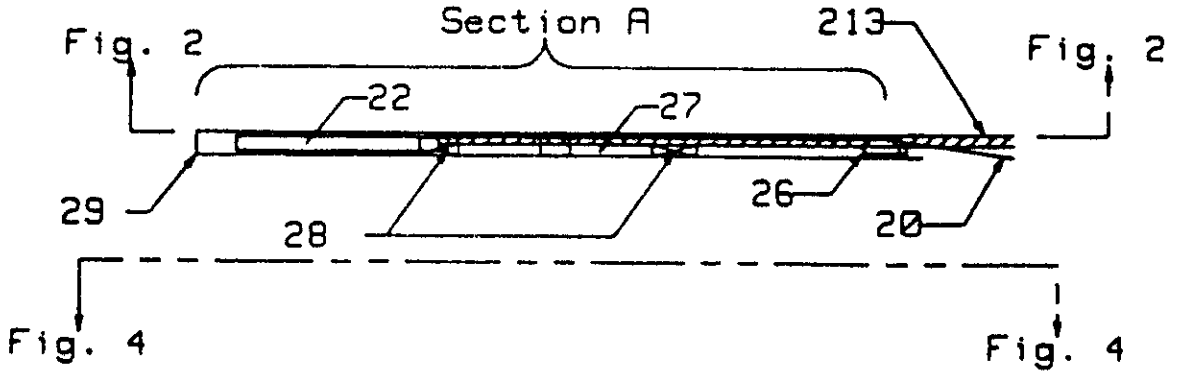
Fig. 2
Section A
213
Fig. 2
22
27
29
28
26
20
Fig. 4
Fig. 4

FIG 3

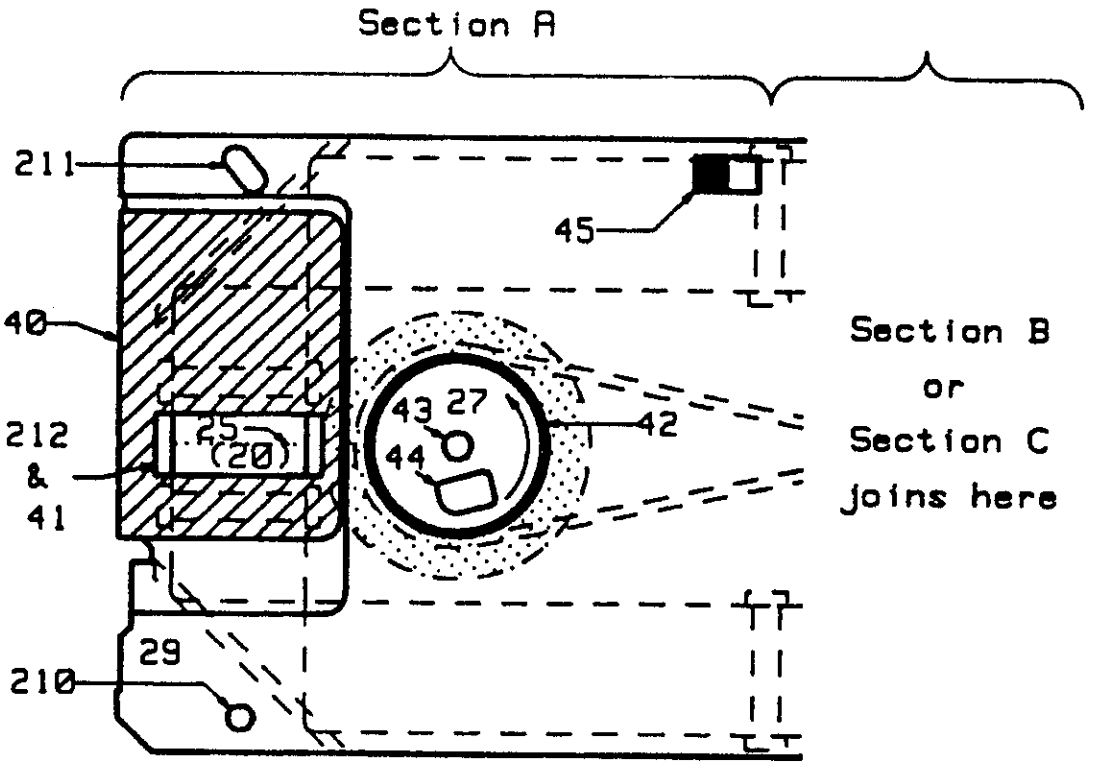
Section A
211
45
40
Section B
or
Section C
joins here
43
27
42
212
&
41
25
(20)
44
29
210

FIG 4

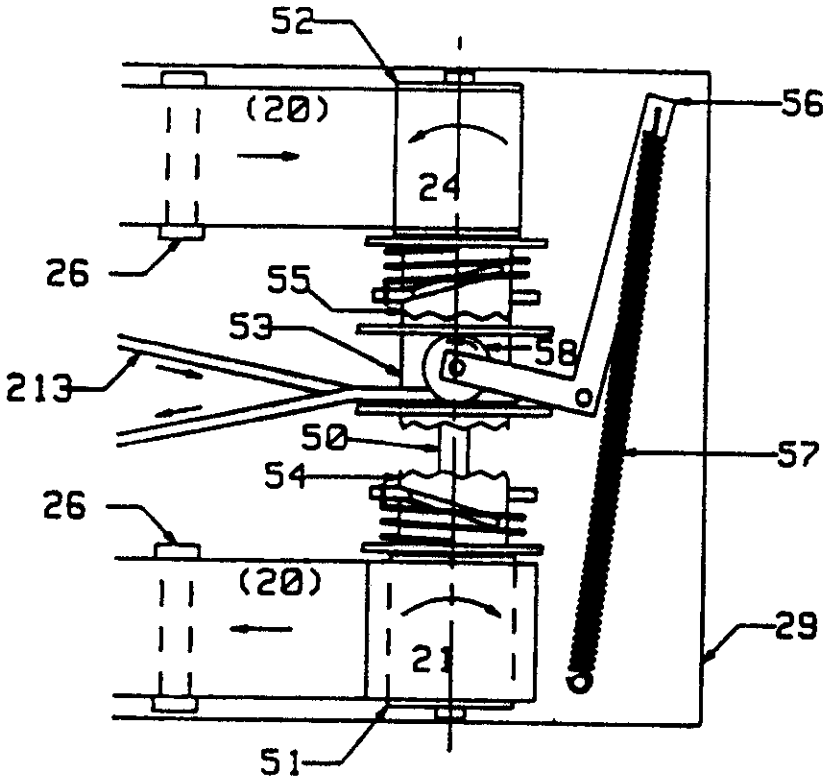

FIG 5

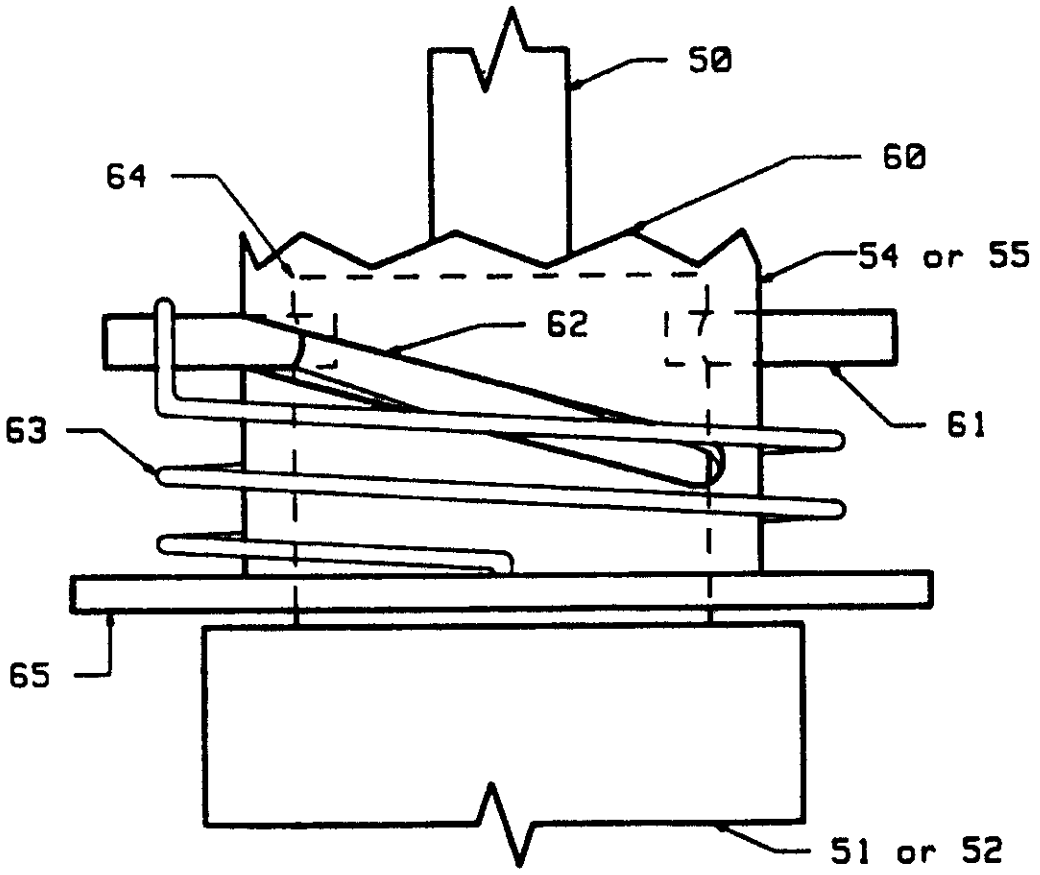

FIG 6

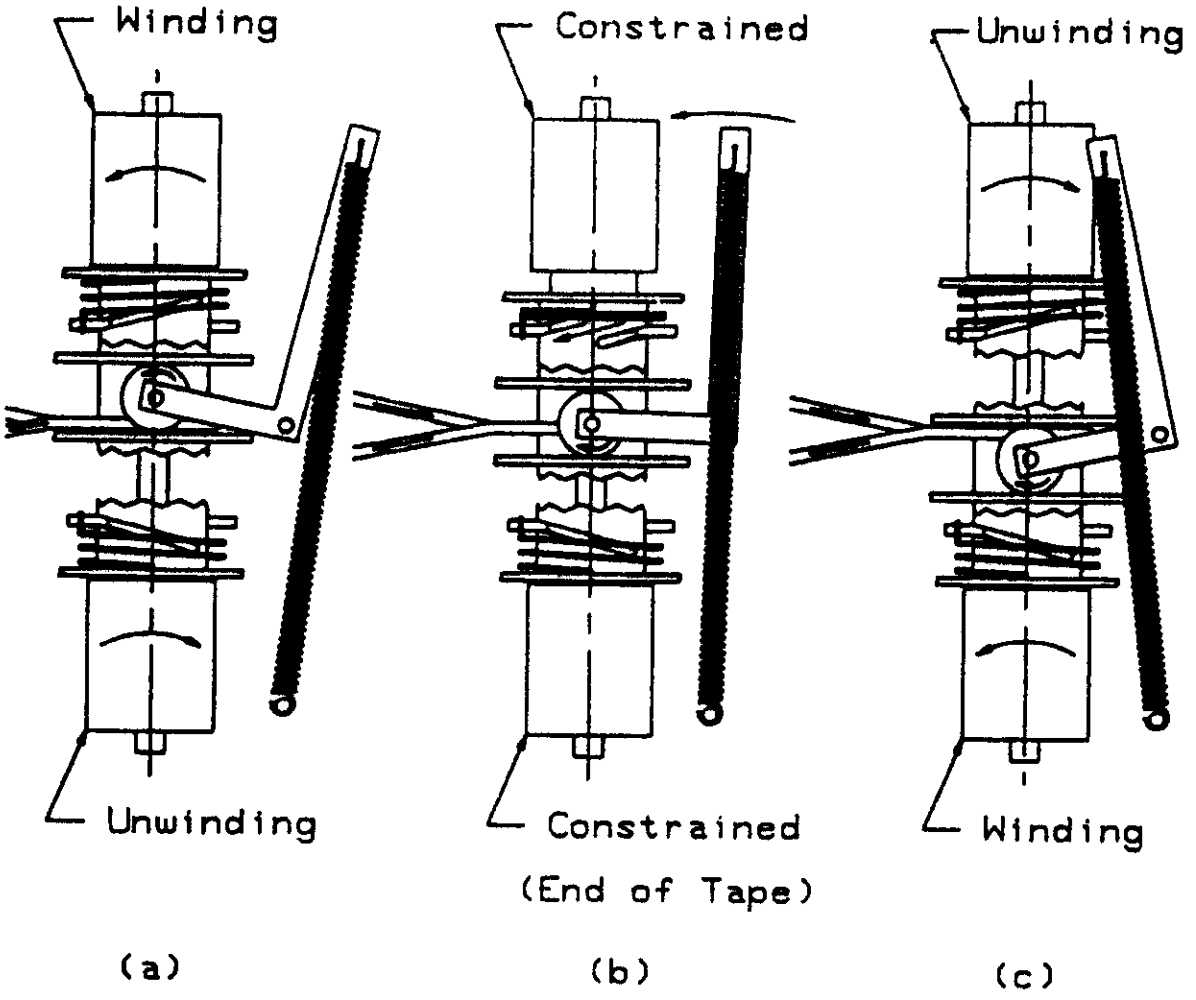
Winding
Unwinding
(a)
Constrained
Constrained
(End of Tape)
(b)
Unwinding
Winding
(c)

FIG 7

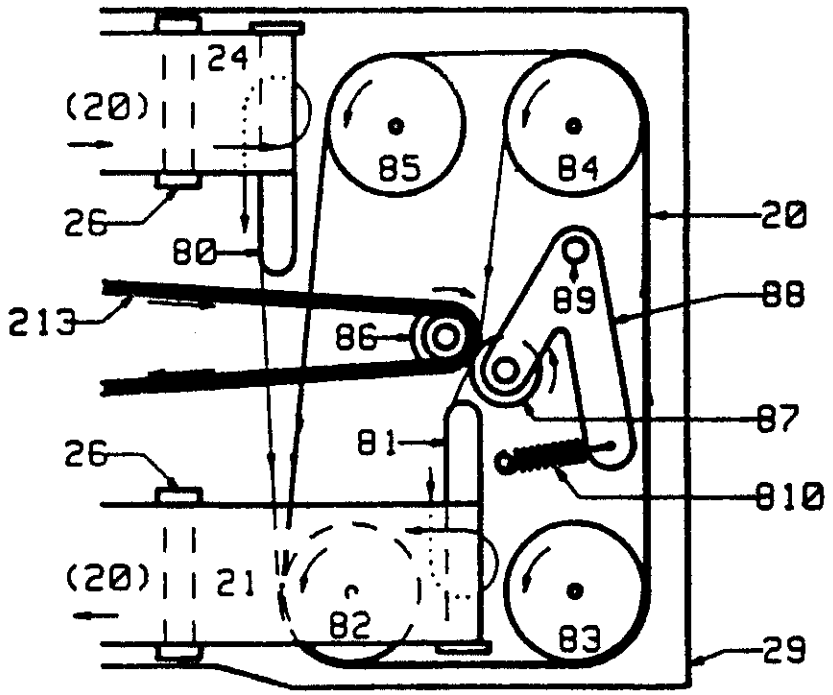

FIG 8

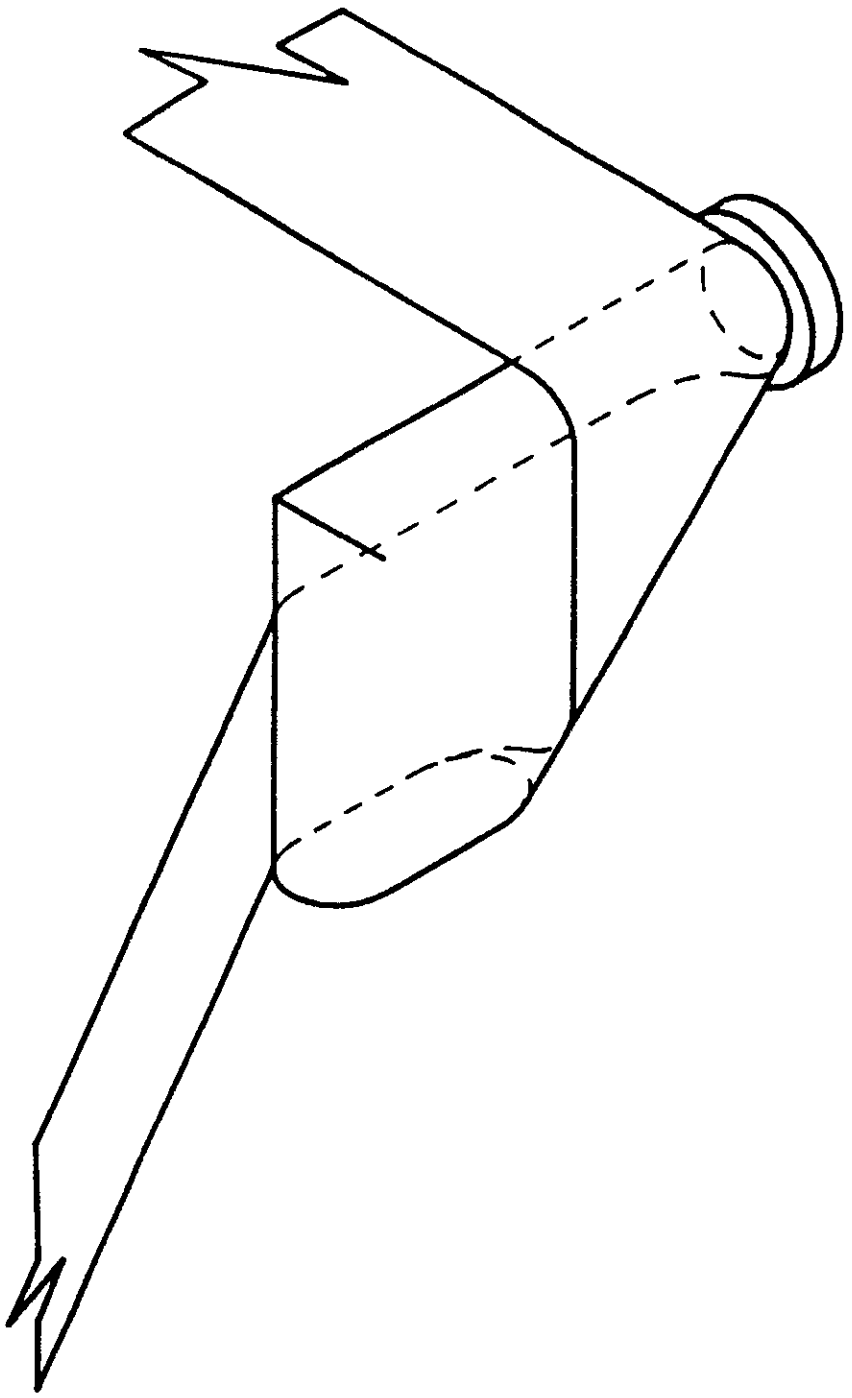

FIG 9

REGISTER ENTRY FOR EP0195571

European Application No EP86301668.9 filing date 10.03.1986

Priority claimed:
18.03.1985 in United States of America - doc: 713162

Designated States DE FR GB IT SE AT

Title TAPE CARTRIDGE

Applicant/Proprietor
HEWLETT-PACKARD COMPANY, Mail Stop 20 B-O 3000 Hanover Street, Palo Alto California 94304, United States of America [ADP No. 500145700011

Inventors
RICHARD H. HENZE, 611 Lancaster Way, Redwood City California 94061, United States of America [ADP No. 543162370011

CHARLES HASTINGS MCCONICA, 7568 Gaylin Avenue, Windsor, Co 80550, United States of America [ADP No. 543162450011

GEORGE CLIFFORD, 26789 Tanglewood Lane, Los Altos Hills California 94022, United States of America [ADP No. 543162520011

BRUCE F. SPENNER, 239 Jo Drive, Los Gatos California 95030, United States of America [ADP No. 543162600011

Classified to
B8M G5R
G11B

Address for Service
ROBERT FRANCIS SQUIBBS, Hewlett-Packard Limited Cain Road, Bracknell, Berkshire RG12 1HN, United Kingdom [ADP No. 504874610011

EPO Representative
ROBERT FRANCIS SQUIBBS, Hewlett-Packard Limited Nine Mile Ride, Wokingham Berkshire RG11 3LL, United Kingdom [ADP No. 504874610011

Publication No EP0195571 dated 24.09.1986
Publication in English

Examination requested 10.03.1986

Patent Granted with effect from 20.05.1992 (Section 25(1)) with title TAPE CARTRIDGE.

29.07.1988 EPO: Search report published on 03.08.1988
Entry Type 25.11 Staff ID. Auth ID. EPT

16.04.1992 Notification from EPO of change of Applicant/Proprietor details
from
HEWLETT-PACKARD COMPANY, Mail Stop 20 B-O 3000 Hanover Street, Palo Alto California 94304, United States of America
[ADP No. 50014570001]
to
HEWLETT-PACKARD COMPANY, Mail Stop 20 B-O, 3000 Hanover Street, Palo Alto, California 94304, United States of America
[ADP No. 50014570001]
Entry Type 25.14 Staff ID. RD06 Auth ID. EPT

16.04.1992 Notification from EPO of change of EPO Representative details from
ROBERT FRANCIS SQUIBBS, Hewlett-Packard Limited Nine Mile Ride, Wokingham Berkshire RG11 3LL, United Kingdom [ADP No. 50487461001]
to
ROBERT FRANCIS SQUIBBS, Hewlett-Packard Limited Cain Road, Bracknell, Berkshire RG12 1HN, United Kingdom [ADP No. 50487461001]
Entry Type 25.14 Staff ID. RD06 Auth ID. EPT

**** END OF REGISTER ENTRY ****

RENEWAL DETAILS

PUBLICATION NUMBER EP0195571

PROPRIETOR(S)

Hewlett-Packard Company, Mail Stop 20 B-O, 3000 Hanover Street,
Palo Alto, California 94304, United States of America

DATE FILED 10.03.1986

DATE GRANTED 20.05.1992

DATE NEXT RENEWAL DUE 10.03.1993

DATE NOT IN FORCE

DATE OF LAST RENEWAL

YEAR OF LAST RENEWAL 00

STATUS PATENT IN FORCE