2 Sheets—Sheet 1.

H. B. STEVENS.

GRINDING-MILLS MADE OF METAL.

No. 193,785. Patented July 31, 1877.

Fig. 1.

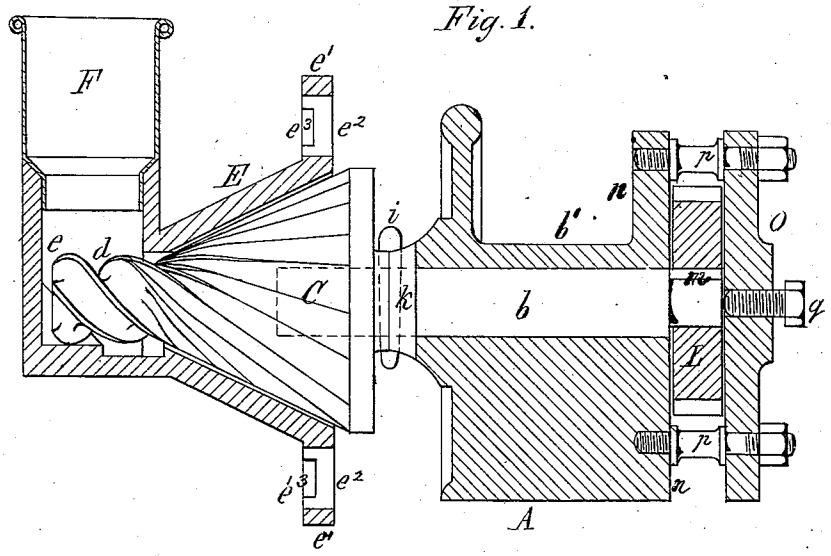

Fig. 2.

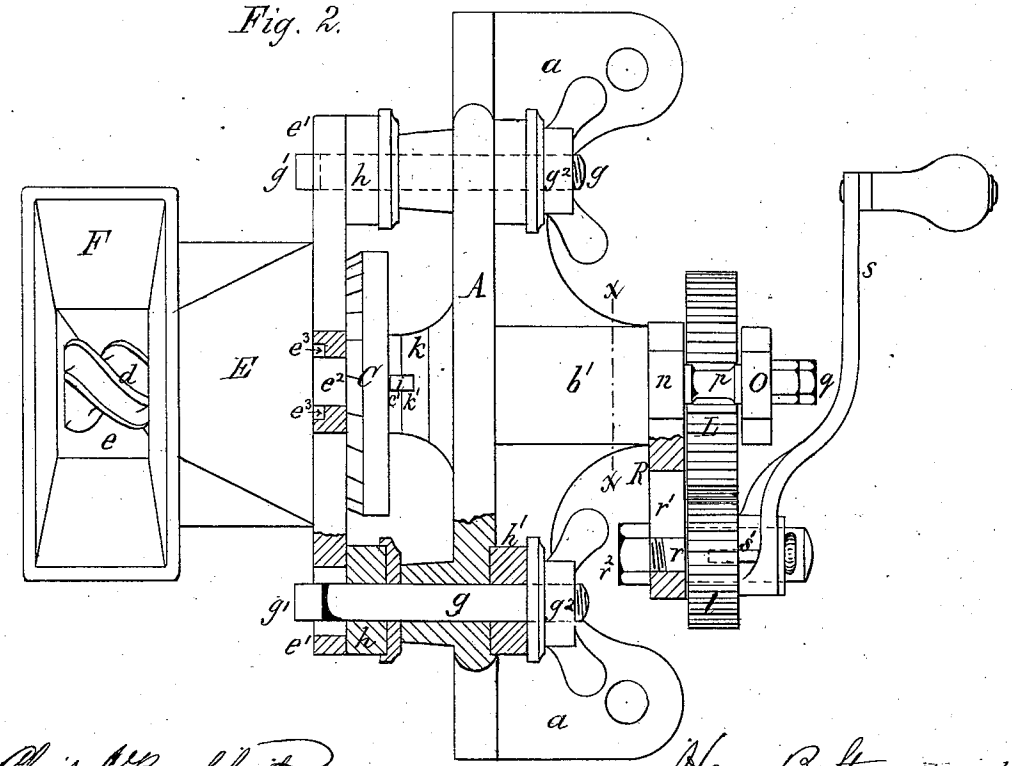

Witnesses

Chas. J. Buchheit

George H. Sykes

Henry B. Stevens Inventor

by Edward Wilhelm

Attorney

N. PETERS, PHOTO-LITHOGRAPHER, WASHINGTON, D. C.

2 Sheets—Sheet 2.

H. B. STEVENS.

GRINDING-MILLS MADE OF METAL.

No. 193,785 Patented July 31, 1877.

Fig. 3.

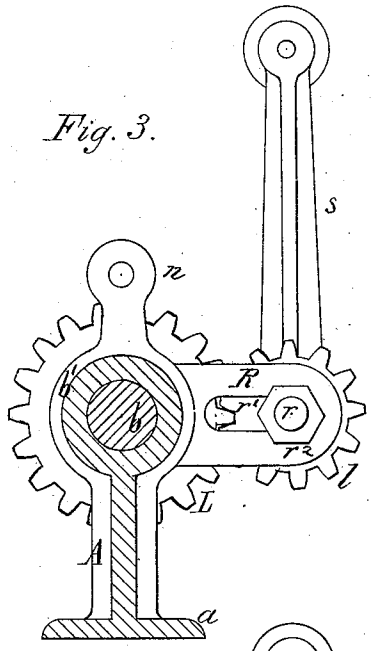

Fig. 5.

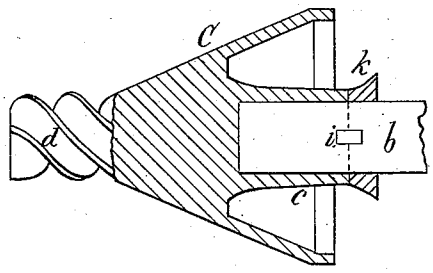

Fig. 4.

Witnesses
Chas. F. Buchheit.
George H. Sykes.

Henry B. Stevens Inventor
by Edward Wilhelm
Attorney.

N. PETERS, PHOTO-LITHOGRAPHER, WASHINGTON, D. C.

UNITED STATES PATENT OFFICE.

HENRY B. STEVENS, OF BUFFALO, NEW YORK, ASSIGNOR TO GEORGE L. SQUIER, OF SAME PLACE.

IMPROVEMENT IN GRINDING-MILLS MADE OF METAL.

Specification forming part of Letters Patent No. 193,785, dated July 31, 1877; application filed June 4, 1877.

To all whom it may concern:

Be it known that I, HENRY B. STEVENS, of the city of Buffalo, in the county of Erie and State of New York, have invented certain new and useful Improvements in Metallic Grinding-Mills, which improvements are fully set forth in the following specification, reference being had to the accompanying drawings.

My invention relates to that class of small grinding-mills which are usually driven by hand or other light power, and employed for grinding corn and other grain in a wet or dry state, and in which the grinding parts consist of a metallic cone revolving within a correspondingly-shaped concave.

My present improvements relate to a mill of this description for which Letters Patent of the United States No. 137,503 were granted to me April 3, 1873, to which reference is hereby made for a full description of said mill.

The object of my invention is to construct the mill in such manner that the concave can be easily removed from the cone, and the parts be cleaned every time the mill is used; also, so that the cone can be readily detached from its shaft and replaced by a new one when it is worn out; also, so that the cone and concave can be adjusted toward and from each other to adapt the machine for granulating and grinding various substances, and so that the velocity of the cone can be regulated according to the requirements of the substance intended to be ground.

The nature of my invention will be fully understood from the following description:

In the accompanying drawings, consisting of two sheets, Figure 1 is a sectional elevation of a mill provided with my improvements. Fig. 2 is a plan view thereof. Fig. 3 is a vertical section in line *x x*, Fig. 2. Fig. 4 is an end elevation of the mill. Fig. 5 is a detached sectional view of the cone at right angles to Fig. 1.

Like letters of reference designate like parts in each of the figures.

A represents the supporting bracket or frame of the machine, provided with a base-plate, *a*, by which it is secured to any suitable horizontal or vertical support, as may be most convenient. *b* is the shaft or spindle, turning in a bearing, *b'*, formed with the bracket or frame A. C is the metallic cone mounted on one end of the spindle *b*, and provided at its smaller end with a feed-screw, *d*. E is the concave surrounding the cone C, and *e* the mouth of the concave, inclosing the feed-screw *d* and connecting with the feed-hopper F.

The concave E is connected with the frame A by two bolts, *g g*, having oblong heads g^1, and passing through circumferential flanges or lugs e^1 of the concave, as clearly shown in Fig. 4. The lugs e^1 of the concave are provided with four elongated or oblong openings, e^2, which permit the heads g^1 of the bolts *g* to pass through in one position only, so that, upon releasing the thumb-nuts g^2 and turning the bolts so that their heads will pass through the oblong holes of the concave, the latter can be removed without requiring the bolts *g* to be withdrawn.

This construction enables the grinding-surfaces to be separated when required to be cleaned, and to be connected together after the cleaning is accomplished, in a very simple and expeditious manner.

The lugs e^1 of the concave are provided on their outer side with shallow recesses or sockets e^3, arranged at right angles to the longitudinal direction of the openings e^2, for the reception of the elongated bolt-heads g^1 when in a locked position, to prevent the bolts from being accidentally turned.

The four openings e^2 provided in the flange or lugs of the concave E permit the position of the concave and feed-hopper to be changed with reference to the main frame A, so that the latter may be secured to a horizontal or vertical support, as may be most convenient.

h represents a spring of rubber, steel, or other suitable material, arranged on each of the bolts *g* between the frame A and concave E, so as to hold the latter away from the cone, thereby enabling the concave to be adjusted toward and from the cone simply by turning the thumb-nuts g^2.

This arrangement of the springs *h*, in holding the concave away from the cone, enables the machine to be used for granulating substances to any desired degree of fineness, the size of the granules produced being depend-

ent upon the width of the space between the cone and concave.

If desired, an additional spring, h', may be arranged in the usual manner on each bolt g between the thumb-nut g^2 and the frame A, whereby the concave is rendered self-adjusting axially and laterally with reference to the cone.

The cone C is fitted loosely on the shaft b, and driven by means of a flat key, i, secured diametrically in the shaft, and entering notches or recesses c' formed in the end of the hub c of the cone, as clearly shown in Figs. 1, 2, and 5. k is a washer placed upon the shaft b between the hub of the cone C and the frame A, and provided with notches or recesses k' for receiving the other half of the flat key i. The washer k receives the thrust of the grinding-pressure, and the wear is consequently concentrated upon this washer, which is easily and cheaply renewed. The cone being attached to the shaft b, as above described, it is readily removed when worn out, and replaced by a new one, upon removing the concave E, which is very desirable, as in countries where mills of this description are used there are few, if any, mechanics sufficiently skilled to properly repair a machine of this kind.

L is a gear-wheel mounted on the end of the shaft b, projecting through the outer end of the frame A, and l the driving-pinion meshing with the wheel L. The gear-wheel L is fitted loosely on the shaft b, so as to be readily slipped on or off, and the shaft is provided with a key, m, whereby the rotary motion of the gear-wheel L is transmitted to the shaft. n n are two lugs cast with the frame A, and arranged diametrically opposite each other at the outer end of the bearing b'. O is a bridge-tree arranged on the outer side of the gear-wheel L, and connected with the lugs n n by stay-bolts p. q is a set-screw arranged in the bridge-tree O, so as to bear against the end of the shaft b, for adjusting the same axially in the frame A.

By means of the set-screw q the position of the cone C with reference to the concave E and frame A can be very nicely regulated, while by tightening or releasing the thumb-nuts g^2 of the bolts g the concave E is respectively closed upon or removed from the cone, as may be desired. In this manner the machine is readily adapted to the contemplated use either for granulating or grinding various substances to any degree of fineness.

The driving-pinion l turns loosely on a stud, r, secured in a lug or arm, R, cast with the frame A at right angles to the lugs n. The arm R is provided with a radial slot, r^1, in which the stud r is secured by a screw-nut, r^2, so that the stud can be adjusted toward and from the shaft b. This construction permits of the gear-wheel L and pinion l to be exchanged one for the other, or to be replaced by wheels of different diameters upon removing the bridge-tree O, for varying the speed of the cone in accordance with the nature of the work to be performed by the machine. For grinding substances that are easily ground the large gear-wheel is arranged upon the shaft b, while for grinding more refractory substances the small gear-wheel is placed upon the shaft. s represents the crank, turning loosely upon the stud r, and connected with the gear-wheel arranged upon the stud by a projection, pin, or lug, s', formed with or secured to the crank, and engaging in a recess formed in the respective gear-wheel.

Having thus fully described my invention, what I claim as new, and desire to secure by Letters Patent, is—

1. The combination, with the frame or bracket A, provided with fastening-bolts g, having elongated heads g^1, and cone C, of the concave E, provided with elongated openings e^2, adapting the concave to be removed from the cone without detaching the bolts, substantially as hereinbefore set forth.

2. The combination, with the frame A, cone C, and fastening-bolts g, having elongated heads g^1, of the concave E, provided with elongated openings e^2 and recesses e^3, arranged at right angles to the openings e^2, substantially as and for the purpose hereinbefore set forth.

3. The combination, with the frame A, cone C, concave E, and fastening-bolts g, of the springs h, arranged on the bolts g between the frame and the concave, and the springs h', arranged on the bolts g between the frame and the nuts g^2, substantially as and for the purpose hereinbefore set forth.

4. The combination, with the frame A, shaft b, and removable concave E, of the cone C, fitted loosely upon the end of the shaft, and having its hub c formed with recesses or key-seats c', and the key i, secured diametrically in the shaft b, so as to permit the cone to be detached from the shaft by simply removing the concave, and without requiring the key to be withdrawn, substantially as and for the purpose hereinbefore set forth.

5. The combination, with the frame A and concave E, of the shaft b, provided with the key i, cone C, having its hub c provided with recesses c', and washer k, arranged between the frame A and the hub of the cone, and provided with recesses k', substantially as and for the purpose hereinbefore set forth.

6. The combination, with the frame A, shaft b, cone C, and concave E, of the arm R, provided with stud r and radial slot r^1, and detachable gear-wheels L l, substantially as and for the purpose hereinbefore set forth.

H. B. STEVENS.

Witnesses:
EDWARD WILHELM,
CHAS. J. BUCHHEIT.