May 31, 1955 C. E. BIEBER ET AL 2,709,725

ELECTRIC SWITCH

Filed March 16, 1954 2 Sheets-Sheet 1

Fig. 1.

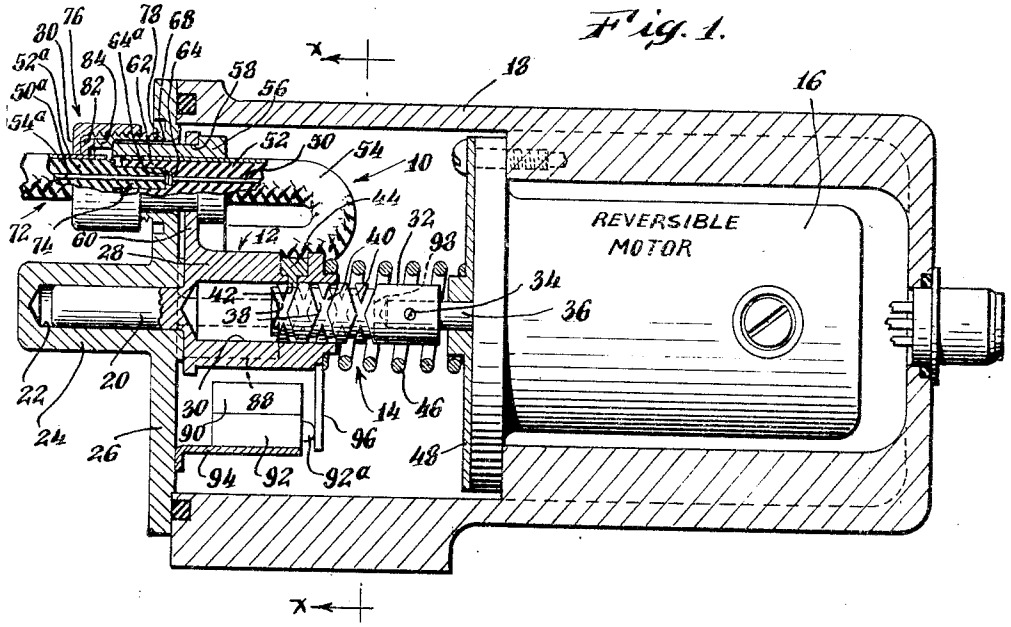

Fig. 2.

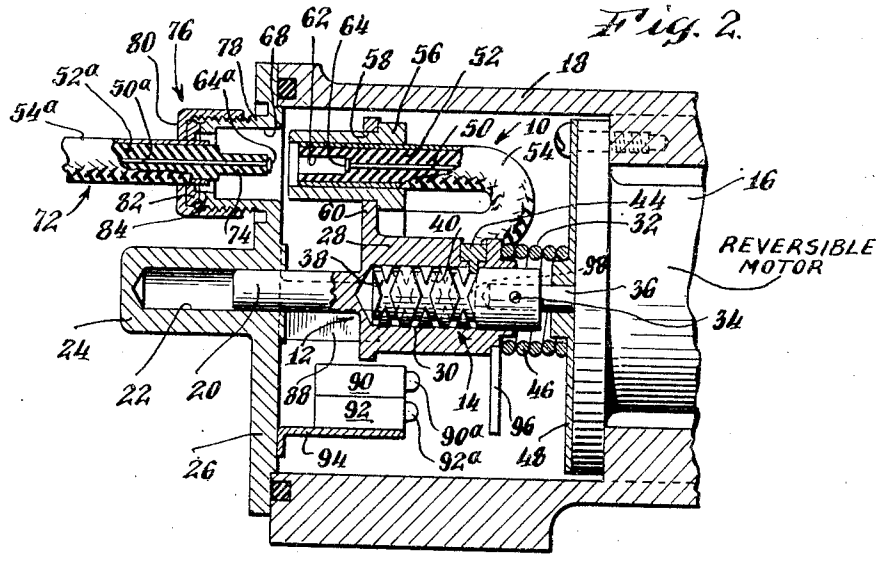

INVENTORS.
Charles E. Bieber
BY Robert S. Carr
Robert Henderson
ATTORNEY

May 31, 1955 C. E. BIEBER ET AL 2,709,725

ELECTRIC SWITCH

Filed March 16, 1954 2 Sheets-Sheet 2

Fig. 3.

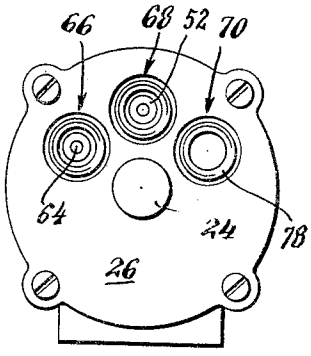

Fig. 4.

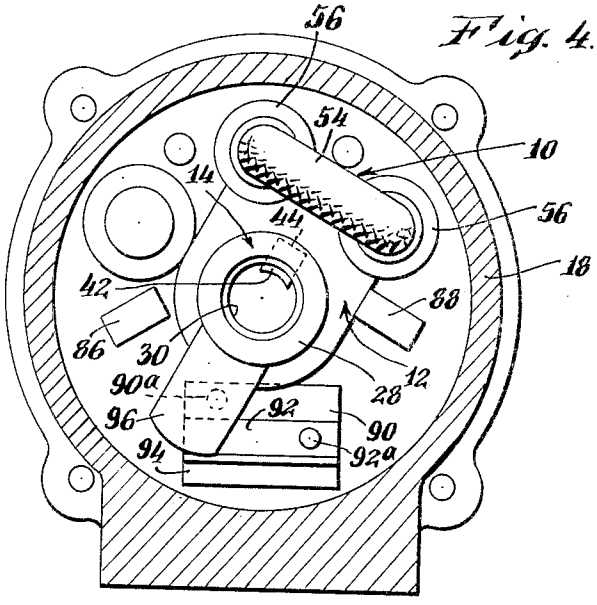

Fig. 5.

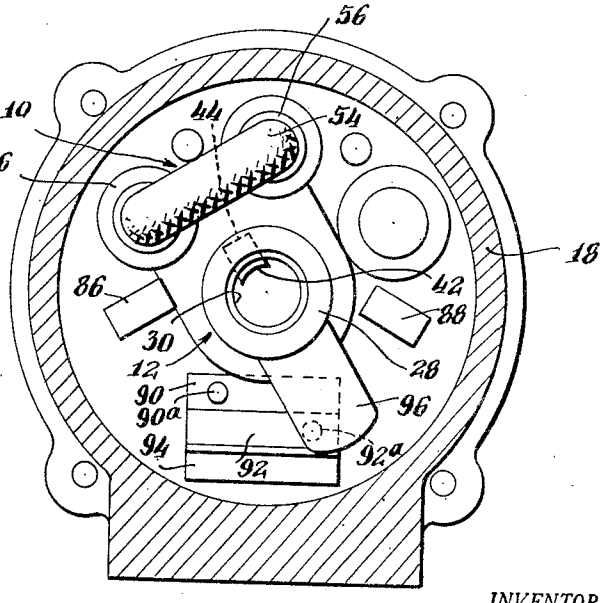

INVENTORS.
Charles E. Bieber
BY Robert S. Carr
Robert Henderson
ATTORNEY.

United States Patent Office 2,709,725 Patented May 31, 1955

2,709,725

ELECTRIC SWITCH

Charles E. Bieber, Elizabeth, and Robert S. Carr, Summit, N. J., assignors to Airtron, Inc., Linden, N. J., a corporation of New Jersey

Application March 16, 1954, Serial No. 416,454

8 Claims. (Cl. 200—4)

This invention relates to electric switches and, more particularly, to switches designed for handling relatively high voltages of such high order as to require efficient insulation about the switches' contact points to prevent energy leakage.

It has been found that electrical energy of such high voltages may usually be most efficiently conducted through so-called "coaxial cables"; and, for illustrative purposes, the present invention is described herein with reference to a switch which is suitable for use with coaxial cables.

An important object of the invention is the provision of an electric switch having an insulation effectiveness at the switch's contact points which is favorably comparable to the insulation effectiveness in related coaxial cables with which the switch is to be used.

Another important object of the invention is the provision of an electric switch wherein the insulation at the contact points is in intertelescoping relationship to lengthen the leakage path and thereby enhance the efficiency of such insulation.

Another important object is the provision of an electric switch having a switching element which undergoes such movement between switching positions as to permit the mentioned intertelescoping arrangement of insulation.

The foregoing and other objects are accomplished by means according to this invention, of which an illustrative embodiment is shown in the accompanying drawings.

In the drawings:

Figure 1 is an approximately central longitudinal sectional view of a switch according to a preferred embodiment of this invention with its switching element in one of plural switching positions.

Fig. 2 is a somewhat similar but fragmentary view of said switch with its switching element in an open or non-switching position.

Fig. 3 is an end view of said switch, on a reduced scale, as seen from the left side of Figs. 1 and 2.

Figs. 4 and 5 are transverse sectional views of the switch, substantially on the line X—X of Fig. 1, each showing the switching element in a different switching position.

The illustrated switch comprises a U-shaped switching element **10**, fixedly mounted on an angularly and translationally movable carrier **12** which is connected, through transmission means generally indicated at **14**, to a reversible electric motor **16**; all said parts being suitably fixed within a preferably dust-tight casing **18**.

The carrier **12** is formed with a single trunnion **20** at its front end, borne for axial sliding and for rotation within a bore **22** in an extension **24** of an end plate **26** of the casing **18**; said bore being suitably vented in a manner, not shown, to prevent air-lock therewithin. Coaxially with the extension **24**, the carrier is formed with a hub **28**, at its back end, having a rearwardly opening bore **30** within which rotatably and axially

slidably extends a transmission shaft **32**, fixed by a set screw **34** upon spindle **36** of motor **16**.

The transmission shaft **32**, at its front end, is formed with two spiral, reverse, crisscrossing threads **38** and **40** within either of which, according to operating conditions, may extend a drive finger **42** of a driving insert **44** suitably fixed into the wall of hub **28**. The carrier **12** is yieldably urged leftwardly, as viewed in Figs. 1 and 2, by a coil spring **46** which is compressed between the back end of the carrier's hub **28** and front end plate **48** of the motor **16**.

The U-shaped switching element **10** is in the nature of a jumper preferably having similar legs and contacts. The jumper is a bent, short length of cable having an inner, high potential, conductor **50** surrounded by a dielectric sleeve **52** which, in turn, is encased by a braided, conducting-metal sheath **54** which serves as an outer conductor. Each leg of the switching element further includes a shouldered ferrule **56** into which the ends of the U-shaped cable length are firmly fixed as, for example, by being soldered or welded thereinto; the ferrules of the two legs extending with a tight, fixed fit through separate holes **58** in a plate portion **60** of the carrier **12**, which holes, as may best be understood from Figs. 4 and 5, are at different radii of the carrier, but equidistant from the trunnion **20**.

The dielectric sleeve **52** terminates at or just inwardly of the plane of the outer end of the ferrule **56** and is formed with a cylindrical, axial end bore or recess **62** at the bottom of which the inner conductor **50** terminates in an exposed contact point or button **64**. Such ends of the switching element are referred to hereinafter, for convenience, as "switch terminals." As hereinafter explained, the switching element **10** is intended to switch electrical connections between two sets of cables. For this purpose, in the illustrated embodiment, three similar cable ends, hereinafter referred to, for convenience, as "cable terminals," are connected into similar apertures **66**, **68** and **70** (Fig. 3); said apertures being so disposed that said switch terminals, in one angular position of the carrier **12**, are in axial alignment with apertures **66** and **68** and, in another angular position of said carrier, are in axial alignment with apertures **70** and **68**. The cable connected into aperture **68** may be common to two separate electric circuits while the cables connected into apertures **66** and **70** may each be independent parts of said two circuits.

As the cable terminals and their mountings are all, preferably, alike, the illustration of one of them in Figs. 1 and 2 should serve to illustrate all three. Such cable terminals each comprise an end of a cable **72**, of the same general character as the cable length of which the jumper **10** is formed, wherein the end of its dielectric sleeve **52***a* is of reduced cylindrical form as at **74** and is complemental to and adapted to telescope snugly within recess **62** of a related switch terminal. The cable terminal's inner conductor **50***a* extends to and terminates, at the end of the reduced end portion **74** of dielectric sleeve **52***a*, in a contact point or button **64***a*, which, when the switch is closed, as in Fig. 1, seats firmly against contact point **64** to maintain electrical connection between inner conductors **50** and **50***a*. The cable terminal is coupled to plate **26** in fixed position at a related aperture **66**, **68** or **70** by a coupling nut **76** threaded onto a circular flange **78** of plate **26**, which flange defines said aperture. A radial flange **80** of the coupling nut bears forcibly against a metal collar **82** which is fixed upon the cable terminal in a suitable manner, as by welding or soldering, to sheath **54***a* of the cable terminal, and said collar is thus held firmly against the end of flange **78**. The end of the latter is turned in as at **84** to form an abutment to limit positively the extent to which the ferrule **56** and a related

switch terminal may pass within the flange 78 when the switch is closed.

Similar stops 86, 88 are suitably fixed in proper positions upon the back of end plate 26 of the casing, as shown in Figs. 4 and 5, to limit the carrier 12 to back and forth angular movement of about 60° between its two switching positions shown separately in said figures. Said stops, of course, are of sufficient dimension axially of the device, as may be seen from the showing of stop 88 in Figs. 1 and 2, that they may engage side edges of the plate portion 60 of the carrier when the latter is in its extreme inward position indicated in Fig. 2.

The device also may advantageously include a pair of microswitches 90, 92, suitably secured together with their operating buttons 90*a* and 92*a* oppositely disposed as in Figs. 4 and 5 and rigidly supported upon a bracket 94 suitably fixed to the back of end plate 26 of the casing. A switch actuating plate or finger 96 is suitably fixed to the hub 28 of the carrier at such axial position near the inner end of said hub that said finger will coact properly either with microswitch button 92*a* as in Figs. 1 and 5 or with microswitch button 90*a* as in Fig. 4.

The mentioned microswitches may be in circuits which control the operation of motor 16 and may function either merely to stop said motor or to automatically reverse said motor after completion of one hereinafter described switching movement of switching element 10. Such circuits and motor controls, however, are not an essential part of this invention and, for this reason and because of the many circuit arrangements which they may involve, said circuits and controls are not described in detail or illustrated herein.

In order to better understand the described structure and its operation, it may be assumed that, at the start of a cycle of operation, the switching element 10 is in its Fig. 4 position with its switching terminals in intimate switching engagement with two related cable terminals in the manner shown in Fig. 1. By remote control, the motor 16 is caused to operate to turn transmission shaft 32 counterclockwisely as viewed in Fig. 4. As the carrier 12 cannot turn because of the switching terminals being partly within cable apertures 66 and 68, such turning of shaft 32 causes drive finger 42 to ride rearwardly within thread 40 of shaft 32 until the switching terminals have been completely withdrawn from the apertures 66 and 68 as in Fig. 2.

During the latter part of such withdrawal of the switching terminals, the latter are substantially clear of the end plate 26 so that the effect of the described rotation of shaft 32 at that time, together with the effect of the reacion of the compression spring 46, is to urge the driving finger 42 counterclockwisely together with the entire carrier 12 and the switching element 10 until said carrier abuts and is stopped by stop 86 wherein the switching terminals are in alignment with but still clear of cable apertures 68, 70. The drive finger 42 then traverses a semicircular slot or groove 98, indicated in broken lines in Figs. 1 and 2, which connects the back ends of the threads 38 and 40.

The drive finger 42 passes from groove 98 into thread 38 and, as this thread spirals oppositely to thread 40, the continued turning of shaft 32 in the same direction as theretofore, together with the force of spring 46, causes the finger 42 to move forwardly and, of course, the entire carrier 12 and the switching element 10 also move forwardly, thereby moving the switching terminals into cable apertures 68 and 70 to close the switch in its Fig. 5 position with the contact points 64, 64*a* of the opposed switching and cable terminals in contact with each other. This contact is firmly maintained by the force of spring 46 even after stopping of the motor as hereinafter described. The sheaths 54, 54*a*, meanwhile, are connected for conduction through ferrule 56, portion 84 of flange 78, and collar 82.

As the carrier 12 nears the end of its just-described forward movement, switch actuating finger 96, then in axial alignment with microswitch button 92*a*, presses that button to operate microswitch 92 and thereby either stop the motor 16 to leave the switch closed or automatically reverse said motor to gain switch back to the Fig. 4 switching position. Which of these alternatives occurs, depends upon the manner in which the said microswitch is associated with the controls of motor 16. It should be clear, of course, that operation from the Fig. 5 to the Fig. 4 switching position would involve reverse operation of motor 16 and coaction of drive finger 42 first with thread 38 and then with thread 40 to assure clockwise movement of the switching element 10.

It may be remarked that end bores 62 of the dielectric sleeve 52 of the switching element are suitably vented to avoid air lock therein, as, for example, by providing a somewhat loose fit of the reduced ends 74 of the cables' dielectric sleeves within said bores or by providing a groove, either straight or spiraling about said reduced ends, from said bores to ambient atmosphere.

This invention may be utilized in an arrangement wherein the switching element comprises either only one switching terminal or more than two switching terminals as, in either of these circumstances, the same mode of operation, i. e., (1) pulling a switch terminal, (2) angularly moving said terminal and (3) pushing said terminal, may be desirable. It should be apparent that the present inventive concept may be employed in various other ways without departing from the invention as set forth in the following claims.

We claim:

1. A telescoping-contact electric switch comprising a translationally and angularly movable carrier having a switching terminal non-coaxially associated therewith, plural, spaced, fixed cable terminals in axial alignment with the path of angular movement of said switching terminal and in a common plane perpendicular to the carrier's axis, a pair of stops limiting said carrier to angular movement between two positions, a rotary transmission shaft coaxial to said carrier and having oppositely directed spiral grooves, and a radial driving finger rigidly associated with said carrier and adapted to slide within said grooves; said finger being adapted, while angular movement of said carrier is prevented by telescoping interengagement of the switching terminal with one of said fixed terminals, to coact with a first one of said grooves to move said carrier translationally to shift the switching terminal out of contact with said one fixed terminal and to move said carrier and switching terminal angularly in one direction to bring the latter into axial alignment with another of said fixed terminals, said finger being further adapted, while angular movement of said carrier is limited in said one direction by one of said stops, to coact with another of said grooves which spirals oppositely to said first groove to move said carrier translationally, oppositely to its first-mentioned translational movement to shift the switching terminal into telescoping contact with said other fixed terminal.

2. An electric switch according to claim 1, further characterized in that said carrier has a second switching terminal, the two switching terminals being adapted to connect with different combinations of cable terminals in the two angular positions of the carrier.

3. An electric switch according to claim 1, further characterized in including spring means continuously urging said carrier toward said cable terminals.

4. An electric switch according to claim 1, further characterized in that said transmission shaft has a groove connection between the back ends of two such oppositely spiralling grooves.

5. An electric switch according to claim 1, further characterized in that the carrier has, at its back end, an axial, cylindrical, recess into which the transmission shaft slidably extends, the driving finger extending radially inwardly from a side wall of said recess.

6. An electric switch according to claim 1, further characterized in that said transmission shaft is reversibly rotatable to adapt the switch for operation in opposite angular directions.

7. An electric switch according to claim 6, further characterized in including a motor for operating said transmission shaft, a switch actuating finger extending radially from said carrier, and a pair of control switches adapted to control said motor and each having a switch operating member forwardly of said switch actuating finger and in axial alignment therewith in a different extreme angular position to which said finger may move; said members being adapted to be engaged and operated by said finger during forward movement of the carrier to stop said motor.

8. A telescoping-contact electric switch comprising plural, spaced, fixed, cable terminals arranged in a common plane, a switching terminal supported for movement to and from telescoping contact with said cable terminals in lines perpendicular to said plane and for movement in parallelism with said plane between said lines, and means for shifting said switching terminal from contact with one of said cable terminals to contact with another of said cable terminals; said shifting means comprising a translationally and angularly movable carrier coacting with said switching terminal to cause the stated

movements thereof, and having a radially extending drive finger fixed thereto toward one side of said carrier's axis of angular movement, means restraining said carrier against angular movement during translational movement and against translational movement during angular movement, and a rotary transmission shaft having reverse threads within which said drive finger extends; one of said threads coacting with said drive finger during restraint of such angular movement to move the carrier translationally to shift said switching terminal first from telescoping contact with one of said cable terminals and then, following termination of the last-mentioned restraint, into alignment with another of said cable terminals, and another, reversely extending one of said threads coacting with said drive finger during further restraint of such angular movement to move the carrier reversely translationally to shift said switching terminal into telescoping contact with said other cable terminal.

References Cited in the file of this patent

UNITED STATES PATENTS

1,399,107	Frankowski et al.	Dec. 6, 1921
1,715,991	Chandler	June 4, 1929
2,502,761	Stachowiak et al.	Apr. 4, 1950
2,516,606	Weaver et al.	July 25, 1950