US 20160222977A1

(19) **United States**

(12) **Patent Application Publication**

(10) **Pub. No.: US 2016/0222977 A1**

(43) **Pub. Date: Aug. 4, 2016**

PAGNIER

(54) **MULTIPHASE PUMP IMPELLER WITH MEANS OF AMPLIFYING AND DISTRIBUTING CLEARANCE FLOWS**

(71) Applicant: **IFP Energies Nouvelles**, Rueil-Malmaison Cedex (FR)

(72) Inventor: **Philippe PAGNIER**, Saint Clair du Rhone (FR)

(21) Appl. No.: **15/021,583**

(22) PCT Filed: **Aug. 25, 2014**

(86) PCT No.: **PCT/EP2014/067997**

§ 371 (c)(1),
(2) Date: **Mar. 11, 2016**

(30) **Foreign Application Priority Data**

Sep. 11, 2013 (FR) 1358724

Publication Classification

(51) **Int. Cl.**

F04D 29/18	(2006.01)
F04D 29/52	(2006.01)
F04D 29/32	(2006.01)
F04D 7/00	(2006.01)

(52) **U.S. Cl.**

CPC ***F04D 29/183*** (2013.01); ***F04D 7/00*** (2013.01); ***F04D 29/522*** (2013.01); ***F04D 29/528*** (2013.01); ***F04D 29/32*** (2013.01)

(57) **ABSTRACT**

The invention relates to a multiphase compressor or expander impeller (rotor) that can be inserted in a multiphase pump casing. The impeller comprises a blade (Ai) that comprises means (**6**) for amplifying and distributing clearance flows between the blade (Ai) and the casing (**4**).

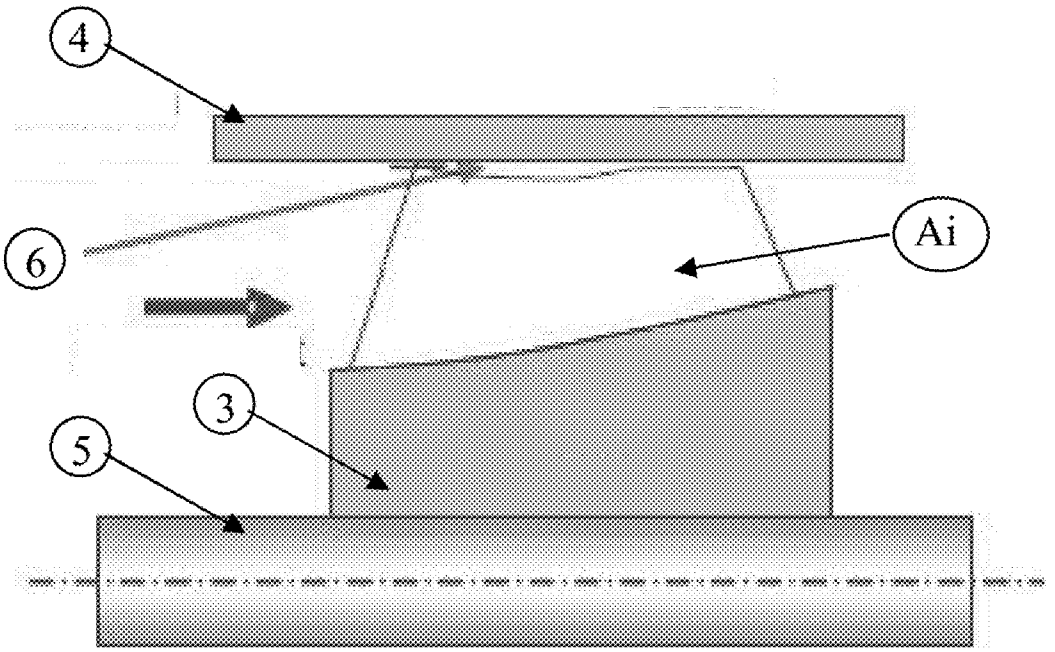

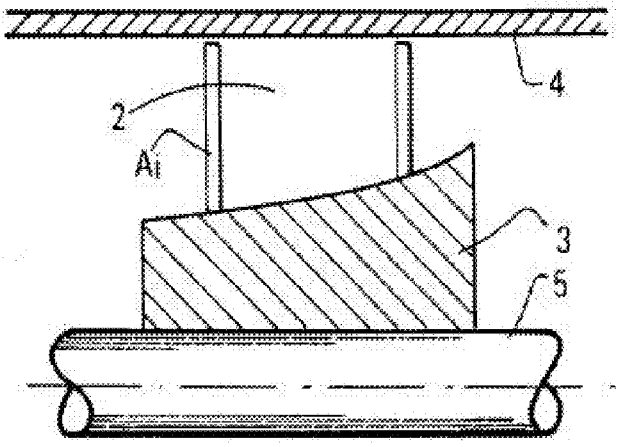

Figure 1

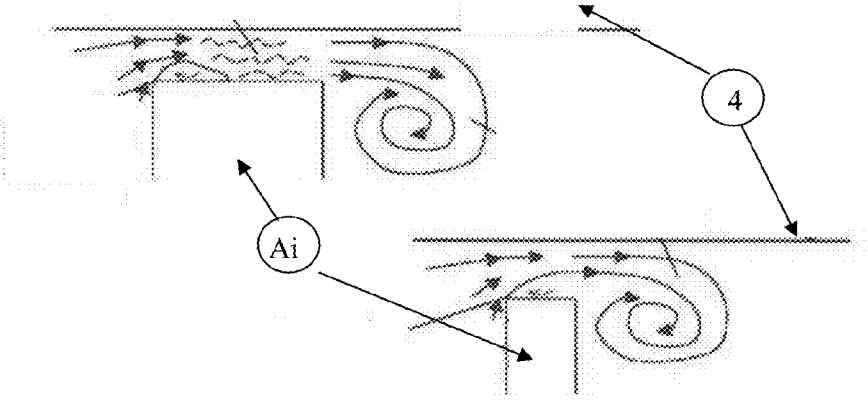

Figure 2

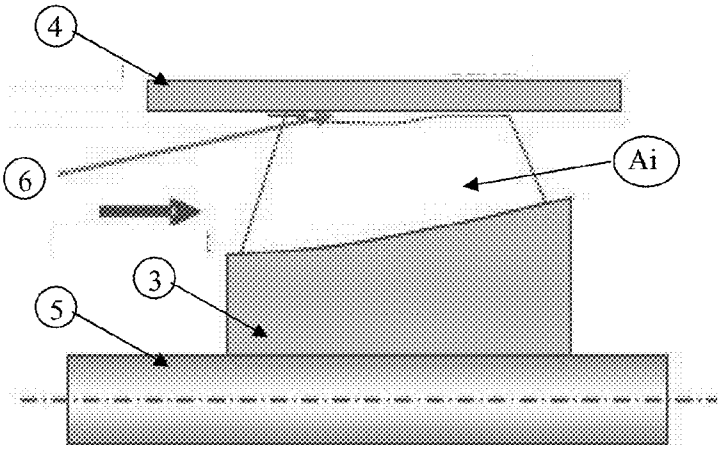

Figure 3

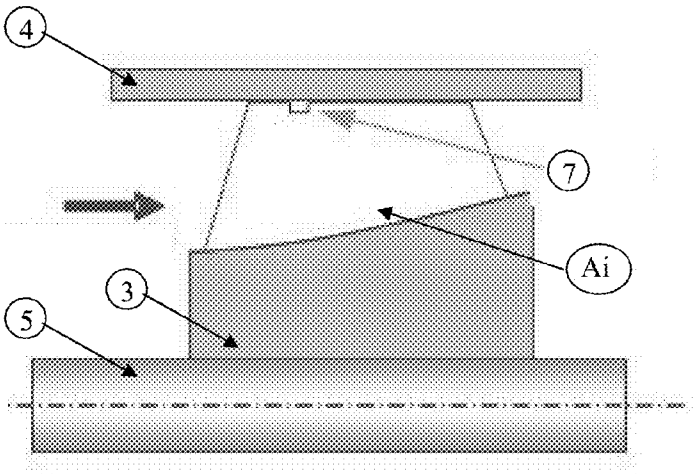

Figure 4

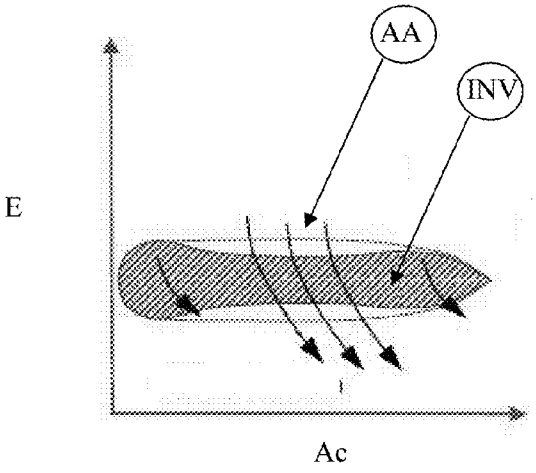

Figure 5

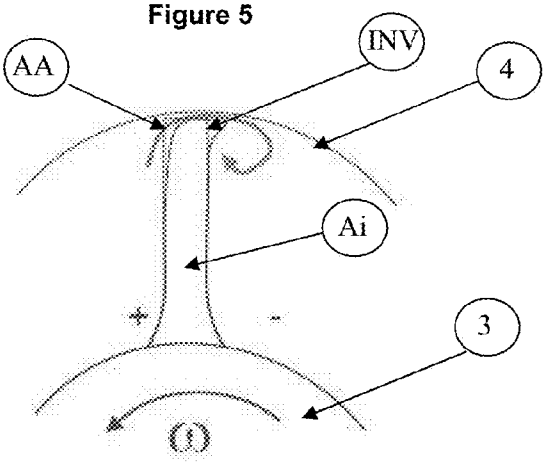

Figure 6

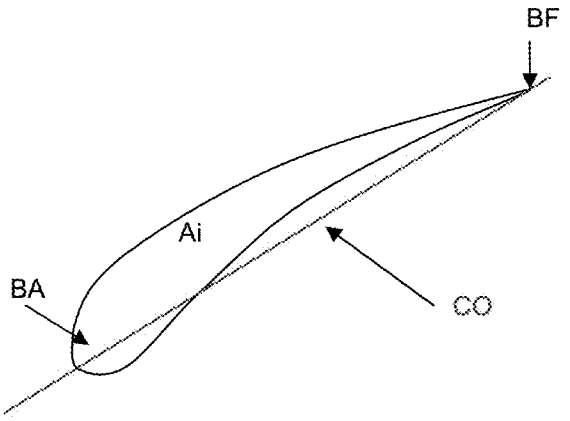

Figure 7

MULTIPHASE PUMP IMPELLER WITH MEANS OF AMPLIFYING AND DISTRIBUTING CLEARANCE FLOWS

CROSS REFERENCE TO RELATED APPLICATION

[0001] Reference is made to PCT Application PCT/EP2014/067997 and French Patent Application No. 13/58724, which are incorporated herein by reference in their entirety.

BACKGROUND OF THE INVENTION

[0002] 1. Field of the Invention

[0003] The present invention relates to the field of multiphase fluid pumping.

[0004] 2. Description of the Prior Art

[0005] A fluid compression or expansion device, also known as a pump, have at least one compression cell that generally comprises two parts which are an impeller (rotor) and a diffuser. The impeller is mounted on a rotating shaft, for example by being keyed or shrink fitted onto this shaft. The impeller has of a hub and at least one blade also referred to as vane. The diffuser is static and integral with the body of the machine.

[0006] Conventionally, the shaft is supported at least at two points by bearings integral with rollers included in the body of the pump. The series connection of several cells forms the hydraulic cell of the pump. Furthermore, the pump comprises a suction and a discharge.

[0007] Multiphase fluids, prior to pumping and under the pressure and temperature conditions considered, can be a mixture notably of a liquid and a gas which is dissolved or not dissolved in the liquid. The multiphase fluid can notably be a two-phase petroleum effluent which is a mixture of oil and gas.

[0008] In the case of conventional rotodynamic turbomachines (compressors, pumps, turbines), careful attention is paid to the space contained between the tip of the rotor blades (rotating part) and the body of the machine (stationary part) during the design stage. Indeed, this space which is necessary for rotating the rotor is also the seat of specific flows generating total pressure drops in the flow and, eventually, a drop in machine efficiency degradation.

[0009] For example, a conventional 400-MW combined-cycle compressor, with clearances representing between 1% and 3% of the blade height, which undergoes a yield loss of 1% minimum, that is 4 MW. Therefore, particular attention is paid by the designers to dimensioning rotor clearance and how to reduce it.

[0010] FIG. **1** shows, by way of example, a rotor of a conventional compressor stage. It comprises a convergent hub (**3**) which is integral with rotating shaft (**5**) on which blades (Ai) are mounted. The rotor is arranged in casing (**4**) of the machine forming a cylindrical envelope or, more generally, an envelope of revolution. In order to enable rotation of the rotor, a clearance is allowed between the tip of blades (Ai) and cylindrical casing (**4**). Generally, this clearance is quantified in the literature in a relative manner in a percentage of the blade height or a percentage of the blade chord, or in an absolute manner in tenths of millimeters.

[0011] Typically, in the case of a compressor, the clearance represents 0.1 to 0.3 millimeter, which is generally less than 1% of the blade height for a low-pressure compressor (great blade height) and up to 6% to 10% for a high-pressure compressor (small blade height). This clearance is the cause of flows which degrade the machine performance, up to a 4-point efficiency loss.

[0012] Indeed, mechanical energy is transferred to the fluid through the agency of the blades integral with the rotating shaft, in the form of kinetic energy (fluid rotation) and pressure energy (related to the convergent shape of the channels formed by the blades). Conventionally, the blades are cambered in the manner of aircraft wing profiles, which allows generation of a lifting force and a drag force whose point of application rotates about the shaft. Work is therefore transmitted to the fluid. The shape of the blades creates a transverse pressure gradient in the inter-blade channel, from the overpressure side of the blades towards the underpressure side. The fluid thus undergoes two pressure gradients: one, transverse, due to the shape of the blades and the other, longitudinal (from the inlet to the outlet of the rotor), related to the energy supplied through the rotating shaft. Moreover, the development of viscous layers along the hub and the blades combined with the effects of the rotor rotation (centrifugal force and Coriolis force) produces secondary flows conventionally encountered in rotodynamic turbomachines. The clearance flow generated by the pressure difference on the blade overpressure side and the blade underpressure side comes on top of these secondary flows.

[0013] The book "Fluid Dynamics and Heat Transfer of Turbomachinery", B. Lakshminarayana, Wiley Interscience Publication, 1996, presents the various flows generated in a pump, notably:

- **[0014]** a secondary flow at the hub, from the overpressure side to the underpressure side. It is linked with the development of boundary layers on the hub associated with the transverse pressure gradient;
- **[0015]** a radial secondary flow along the blades, generated by the development of boundary layers along the blades, combined with the effect of the centrifugal force, the Coriolis force and the effects of the transverse pressure gradient;
- **[0016]** a wedge flow at the hub on the blade underpressure side. It is the seat of the interaction of the flow at the hub and the blade bypass flow; and
- **[0017]** a clearance at the tip of the blades.

[0018] The pressure difference on each side of the blades generates a flow at the tip of the blades (FIG. **2**) whose flow rate depends on the thickness of the blades, the dimension of the clearance and the viscosity of the fluid. FIG. **2** shows the flows for a thick (left-hand figure) blade (Ai) and a finer (right-hand figure) blade (Ai). At the clearance inlet, the blade bypass flow generates a separation that may induce a flow restriction up to 60% of the clearance. Depending on the blade thickness, the separation can be more or less significant, with possible reattachment along the thickness. At the clearance outlet, the interaction between the radial flow developed along the blade underpressure side and the clearance flow produces a vortex referred to as clearance vortex.

[0019] In the case of conventional single-phase machines (compressors, pumps), designers seek to reduce the effects of the clearance flow on the machine efficiency. Several solutions have been proposed to overcome this problem:

- **[0020]** Providing grooves of different shapes in the casing of the machine which are opposite the rotor blade passage to "absorb" the clearance flow and to remove the clearance vortex;

[0021] Placing a hoop shroud on the rotor. The advantage of this option is that it indeed removes the clearance flow in the rotor. On the other hand, this device produces a leakage flow between the hoop and the casing of the machine, linked with the longitudinal pressure gradient (higher pressure at the rotor outlet than at the inlet thereof). A recirculation flow thus occurs towards the casing, flowing upstream and impacting the flow at the rotor inlet. Such a device type is notably described in French patent applications 2,787,836 and 2,787,837.

[0022] A multiphase pump ensures good liquid/gas mixing.

SUMMARY OF THE INVENTION

[0023] The invention concerns a multiphase compressor or expander impeller (rotor) that can be inserted in a multiphase pump casing. The shape of the impeller blades is so determined to amplify and distribute the clearance flows between the blade and the casing, which unlike pumps of the prior art, was intended to decrease these flows. In accordance with the invention, the clearance flow is concentrated in a precise zone. Thus, the impeller enables good mixing of the liquid and the gas, and good two-phase efficiency.

[0024] The invention relates to a helical-radial-axial multiphase compressor or expander impeller comprising at least one blade mounted on a hub, with the multiphase impeller being arranged in a casing of a multiphase fluid compression or expansion device. The blade includes means which amplifies and distributes clearance flows between the blade and the casing.

[0025] According to one embodiment of the invention, the amplification and distribution comprises at least one zone where the clearance between the casing and the blade is increased in relation to the clearance at the tips of the blade.

[0026] Advantageously, the clearance between the blade and the casing varies in the longitudinal direction or the curvilinear direction of the impeller.

[0027] Preferably, the clearance between the blade and the casing is increased in the zone where the pressure difference between the overpressure side and the under pressure side of the blade is at the maximum.

[0028] Advantageously, the clearance is maximum over a length of the blade starting substantially at 20% of the longitudinal length of the blade.

[0029] Furthermore, the clearance can be minimum at the leading edge and the trailing edge of the blade.

[0030] According to another embodiment, the clearance is generated by at least one groove formed on the radial tip of the blade.

[0031] Alternatively, the clearance is generated by a continuous variation of the clearance between the blade and the casing.

[0032] According to an embodiment of the invention, the means for amplifying and distributing comprises at least one zone where the thickness of the blade is decreased in relation to the thickness at the tips of the blade.

[0033] According to an embodiment of the invention, said the means for amplifying and distributing comprises a curvature of the tip of at least one face a transverse profile of the blade in the least pressure direction.

[0034] Preferably, both tips of the two faces of the transverse profile are curved in the least pressure direction.

[0035] The invention also relates to a device for compressing or expanding a multiphase fluid comprising at least a liquid phase and a gas phase, wherein the device comprises a casing and at least one impeller according to the invention.

BRIEF DESCRIPTION OF THE DRAWINGS

[0036] Other features and advantages of the method according to the invention will be clear from reading the description hereafter of embodiments given by way of non limitative example, with reference to the accompanying figures wherein:

[0037] FIG. **1**, already described, illustrates a rotor of a stage of a compressor according to the prior art;

[0038] FIG. **2**, already described, illustrates a typical flow occurring in the clearance between the tip of a blade of a rotor of the pump casing for two blades of different thickness;

[0039] FIG. **3** illustrates a rotor according to another embodiment of the invention;

[0040] FIG. **4** illustrates a rotor according to yet another embodiment of the invention;

[0041] FIG. **5** shows the blade thickness distribution for a rotor according to the prior art (AA) and according to a second embodiment of the invention (INV);

[0042] FIG. **6** shows the curved shape of the blades for a rotor according to the prior art (AA) and according to a third embodiment of the invention (INV); and

[0043] FIG. **7** shows a blade.

DETAILED DESCRIPTION

[0044] The invention is a multiphase compressor or expander impeller that can be inserted in a casing of a multiphase pump. The multiphase impeller (rotor) comprises at least one blade mounted on a hub. According to the invention, the blade comprises means for amplifying and distributing the clearance flows between the blade and the casing.

[0045] The shape of the impeller blades is so determined to amplify the clearance flows between the blade and the casing. Indeed, in the case of multiphase pumps, it is desired to use the clearance in order to promote liquid/gas mixing, unlike single-phase pumps intended to reduce or to remove these flows.

[0046] The present invention thus controls the clearance flow to judiciously position the clearance vortex in the inter-blade channel in order to promote liquid/gas mixing.

[0047] Clearance flow at the tip of the rotor blades is the source of the following phenomena:

[0048] A clearance vortex propagating in the inter-blade channel and likely to impact the flow;

[0049] A contribution to the development of recirculation flows that occurs at a partial flow rate and is characterized by a reflux flow upstream from the compression stage; Pressure profile modifications at the surface of the blades; and Flow modification at the rotor outlet.

[0050] The parameters influencing these phenomena are notably:

[0051] the dimension of the clearance between the casing and the blade,

[0052] the thickness of the blades at the casing,

[0053] the pressure difference between each side of the blades, directly linked with the geometric parameters of the rotor (blades camber, among other things), and

[0054] the turbomachine operating conditions which are in particular the flow rate.

[0055] Determining the shape of the rotor blades in order to amplify the clearance flows between the blade and the casing

adjusts influential parameters which are the shape and the dimensions of the clearance between the casing and the blade and/or the thickness of the blades and/or the shape of the blades at the casing.

[0056] In the description below, a "fluid" is understood to be a multiphase fluid notably comprising a liquid phase and a gas phase, and possibly solid particles, and for example sand or viscous particles such as hydrate agglomerates. The liquid phase can contain liquids of different nature; similarly, the gas phase includes gases of a different nature. The multiphase fluid can notably be a two-phase petroleum effluent which is mixture of oil and gas.

[0057] FIG. **7** represents the various geometric terms characterizing a blade. The longitudinal length is the length of the blade (three-dimensional) in a plane passing through the axis of rotation of the pump. The leading edge (BA) "leads" the flow and located opposite the flow. The trailing edge (BF) is located at the rotor outlet, and the chord (CO) of the blade is an imaginary line passing through the leading edge and the trailing edge of the blade.

[0058] According to a first embodiment of the invention, the means for providing amplification and distribution comprises at least one zone where the clearance between the casing and the blade is increased in relation to the clearance at the blade tips. Therefore, the shape of the blade is so determined that the clearance between the blade and the casing varies along the longitudinal direction of the impeller.

[0059] This embodiment varies the clearance at the tip of the rotor blades as a function of a curvilinear abscissa. Usually, the clearance is constant and it represents approximately less than 1% of the blade height in terms of tenths of millimeters. Here, it consists in:

increases in clearance where the pressure difference between the overpressure side and the underpressure side of the blades is maximum;

[0060] maintains the minimum clearance value at the leading edge of the blades (set by manufacturing tolerances) to reduce the recirculation flow at the rotor inlet; and

[0061] reduces to a minimum the clearance on the second axial part of the blades because secondary flows are already generated there and it is no longer necessary to fuel them with the clearance flow.

[0062] This clearance can be generated by the outer shape of the blade.

[0063] According to another embodiment illustrated in FIG. **3**, the clearance between the blade and the casing varies continuously (**6**). In this figure, the thick arrow shows the direction of flow of the fluid. Advantageously, the clearance increases where the pressure difference between the overpressure side and the underpressure side of the blade is maximum, which preferably is substantially at 20% of the longitudinal length of the blade. Furthermore, the clearance can be minimum at the leading edge and at the trailing edge of the blade.

[0064] Alternatively, as illustrated in FIG. **4**, this embodiment provides one or more grooves (**7**) at the tip of the blades (and not in the pump casing as in the prior art). In this figure, the thick arrow shows the direction of flow of the fluid. Advantageously, the groove(s) are arranged downstream from the leading edge. For example, the first groove can be provided at 20% of the longitudinal length of the blade.

[0065] Grooves (**7**) or clearance increase (**6**) at approximately 20% of the chord can be oriented at an angle to the blade chord so as to set the clearance vortex orientation in the channel.

[0066] The width of the device can be adjusted as a function of the pressure gain achieved by the rotor, so that the clearance vortex can develop sufficiently to ensure locally, in the channel and at the casing, liquid/gas mixing. The vortex should not extend to the previous blades in order to prevent efficiency degradation.

[0067] Furthermore, the arrangement of the clearance allows, on the one hand, to limit the recirculation flow at the leading edges, flowing upstream and, on the other hand, to reduce the clearance vortex at the trailing edges.

[0068] According to a second embodiment of the invention, the means for providing amplification and distribution comprises at least one zone where the thickness of the blade is reduced in relation to the thickness at the tips of the blade. The head blade thickness varies as a function of the curvilinear abscissa. The curvilinear abscissa is defined as the length developed along the blade following the skeleton line thereof, counted from the leading edge. In other words, curvilinear abscissa m can be defined by the following expression: $dm=\sqrt{dz^2+d(r\theta)^2}$, where dz is the length element in the axial direction of the blade, $d(r\theta)$ is the length element in the tangential direction, r being the radius and θ the azimuth angle around the axis of rotation of the machine.

[0069] Advantageously, according to the direction of the curvilinear abscissa of the blade (along the blade), the thickness thereof in the vicinity of the leading edge and in the vicinity of the trailing edge is greater than the thickness of the blade at the center thereof. More precisely, this embodiment of the invention maintains or increases in thickness at the tips and in reduces the thickness at the center of the blades. FIG. **5** shows an example of the distribution of head blade thickness (E) as a function of the curvilinear abscissa (Ac) for a blade according to the prior art (AA) and a blade according to this second embodiment (INV). In the figure, the arrows show the flows for the blade according to this second embodiment (INV).

[0070] This new arrangement allows maintaining or increasing the pressure drops in the clearance at the leading edge and the trailing edge, and to reduce pressure drops in the middle of the blades (where the thickness is smaller). This contributes to increasing the clearance flow rate at the center of the blades. It also allows reducing the recirculation flow coming from the leading edge and flowing upstream (source of reduction of the pressure gain at reduced flow rate), and reducing the impact of the clearance vortex at the trailing edge on the flow at the rotor outlet.

[0071] Finally, blade thickness reduction where the clearance flow is to be promoted also allows reducing the mixing zone in the clearance and thus promoting the vortex development at the clearance outlet.

[0072] According to a third embodiment of the invention, the means for amplifying and distributing comprise a curvature of the tip of at least one face of the transverse profile of the blade in the lowest pressure direction of the blade in cross-sectional view, that is a view in a perpendicular plane to the axis of rotation of the machine. This shape is suited for amplifying clearance flows between the blade and the casing. Advantageously, a tip of at least one face of the transverse profile of the blade is curved in the lowest pressure direction.

Preferably, both tips of the transverse profile of the blade are curved in the lowest pressure direction.

[0073] FIG. **6** illustrates the shape of a blade (Ai) in front view according to the prior art (AA) and according to this third embodiment (INV). The blades generally have rectangular profiles at the tips thereof (AA). Within the scope of the third embodiment (INV), the blades are slightly curved in the lowest pressure direction, at the level of the casing. It is also possible to curve only one face of the blades. For example, the overpressure face can be curved whereas an underpressure face can remain rectangular.

[0074] The purpose of this arrangement is to promote the clearance flow from the radial secondary flow that develops along the blades on the overpressure side thereof. It also allows reduction of the separation that is a source of pressure drop in the clearance flow.

[0075] The embodiments of the invention presented above can be combined two by two or all together, notably to combine their effects on the flow and to allow good mixing of the liquid and the gas.

[0076] The improvements provided for the rotor/casing clearance of the machine do not modify the speed profiles at the rotor outlet. The pressure gain is thus not affected in relation to the original shape of a conventional cell.

[0077] On the other hand, control of the clearance flow is for optimizing the clearance vortex and not to remove it. It allows taking maximum advantage of the beneficial effects thereof in order to ensure liquid/gas mixing with a better yield loss management.

[0078] The effects observed thus are:

[0079] in single-phase flow, maintenance or improvement of the yield of a multiphase pump and conservation of the overall pressure gain achieved by the compression stage. In general, the total pressure losses linked with the leakage flow at the clearance represent a cost of about ten efficiency points in single-phase flow (2 to 4 points for a conventional compressor). Here, the modifications provided slightly improve the efficiency of the multiphase pump because they judiciously distribute the leakage flow rate and do not increase it;

[0080] increase two-phase efficiency by several points, by judiciously positioning the clearance vortex in the inter-blade channel,

[0081] reduce of the negative effects of the recirculation flows observed upstream from the rotor, at reduced flow rate. It should be noted that recirculation flows are generated at the casing for low flow rates. They flow up the inlet pipe and disturb the flow entering the rotor.

[0082] The blades according to the three embodiments can be put together and fastened to the hub by welding, or the blades and the hub can be made together by molding or milling.

[0083] Furthermore, the invention relates to a device for compressing or expanding a multiphase fluid (multiphase pump), comprising at least a casing and a compression cell including at least one impeller as defined above. The impeller is mounted on a rotating shaft, for example by being keyed or shrink fitted onto this shaft. The impeller has a hub and at least one blade. The diffuser is static and integral with the body of the machine. Conventionally, the shaft is supported at least at two points by bearings integral with rollers included in the body of the pump. The series connection of several of these cells forms the hydraulic cell of the pump. Furthermore, the pump comprises a suction and a discharge.

[0084] The pump according to the invention can be used notably for pumping a two-phase petroleum effluent of a mixture of oil and gas.

1-12. (canceled)

13. A helical-radial-axial multiphase compressor or expander impeller comprising:

at least one blade mounted on a hub, the multiphase impeller being disposed in a casing of a multiphase fluid compression or expansion device; and wherein at least one blade comprises means for amplifying and for distributing clearance flows between the at least one blade and the casing.

14. An impeller as claimed in claim **13**, wherein the means for amplifying and distributing comprises at least one zone where clearance between the casing and at least one blade is largest at a clearance between the tips of at the least one blade.

15. An impeller as claimed in claim **14**, wherein the clearance between at least one blade and the casing varies along longitudinal length of the impeller or a curvilinear direction of the impeller.

16. An impeller as claimed in claim **15**, wherein clearance between at least one blade and the casing is largest in a zone where a pressure difference between an overpressure side and an underpressure side of the at least one blade is a maximum.

17. An impeller as claimed in claim **14**, wherein the clearance is a maximum over a length of the blade starting in a vicinity of 20% of a longitudinal length of the at least one blade.

18. An impeller as claimed in claim **15**, wherein the clearance is a maximum over a length of the blade starting in a vicinity of 20% of a longitudinal length of the at least one blade.

19. An impeller as claimed in claim **16**, wherein the clearance is a maximum over a length of the blade starting in a vicinity of 20% of a longitudinal length of the at least one blade.

20. An impeller as claimed in claim **14**, wherein clearance is at a minimum at a leading edge and a trailing edge of the at least one blade.

21. An impeller as claimed in claim **15**, wherein clearance is at a minimum at a leading edge and a trailing edge of the at least one blade.

22. An impeller as claimed in claim **16**, wherein clearance is at a minimum at a leading edge and a trailing edge of the at least one blade.

23. An impeller as claimed in claim **17**, wherein clearance is at a minimum at a leading edge and a trailing edge of the at least one blade.

24. An impeller as claimed in claim **18**, wherein clearance is at a minimum at a leading edge and a trailing edge of the at least one blade.

25. An impeller as claimed in claim **19**, wherein clearance is at a minimum at a leading edge and a trailing edge of the at least one blade.

26. An impeller as claimed in claim **14**, wherein clearance is provided by at least one groove formed on the radial tip of at the least one blade.

27. An impeller as claimed in claim **15**, wherein clearance is provided by at least one groove formed on the radial tip of at the least one blade.

28. An impeller as claimed in claim **16**, wherein clearance is provided by at least one groove formed on the radial tip of at the least one blade.

29. An impeller as claimed in claim **17**, wherein clearance is provided by at least one groove formed on the radial tip of at the least one blade.

30. An impeller as claimed in claim **18**, wherein clearance is provided by at least one groove formed on the radial tip of at the least one blade.

31. An impeller as claimed in claim **19**, wherein clearance is provided by at least one groove formed on the radial tip of at the least one blade.

32. An impeller as claimed in claim **20**, wherein clearance is provided by at least one groove formed on the radial tip of at the least one blade.

33. An impeller as claimed in claim **14**, wherein clearance is provided by a continuous variation of clearance between the at least one blade and the casing.

34. An impeller as claimed in claim **15**, wherein clearance is provided by a continuous variation of clearance between the at least one blade and the casing.

35. An impeller as claimed in claim **16**, wherein clearance is provided by a continuous variation of clearance between the at least one blade and the casing.

36. An impeller as claimed in claim **17**, wherein clearance is provided by a continuous variation of clearance between the at least one blade and the casing.

37. An impeller as claimed in claim **18**, wherein clearance is provided by a continuous variation of clearance between the at least one blade and the casing.

38. An impeller as claimed in claim **19**, wherein clearance is provided by a continuous variation of clearance between the at least one blade and the casing.

39. An impeller as claimed in claim **20**, wherein clearance is provided by a continuous variation of clearance between the at least one blade and the casing.

40. An impeller as claimed in claim **26**, wherein clearance is provided by a continuous variation of clearance between the at least one blade and the casing.

41. An impeller as claimed in claim **14**, wherein the means for amplifying and for distributing comprises at least one zone where a thickness of at least one blade is decreased in relation to a thickness at the tips of the blade.

42. An impeller as claimed in claim **15**, wherein the means for amplifying and for distributing comprises at least one zone where a thickness of at least one blade is decreased in relation to a thickness at the tips of the blade.

43. An impeller as claimed in claim **16**, wherein the means for amplifying and for distributing comprises at least one zone where a thickness of at least one blade is decreased in relation to a thickness at the tips of the blade.

44. An impeller as claimed in claim **17**, wherein the means for amplifying and for distributing comprises at least one zone where a thickness of at least one blade is decreased in relation to a thickness at the tips of the blade.

45. An impeller as claimed in claim **18**, wherein the means for amplifying and for distributing comprises at least one zone where a thickness of at least one blade is decreased in relation to a thickness at the tips of the blade.

46. An impeller as claimed in claim **19**, wherein the means for amplifying and for distributing comprises at least one zone where a thickness of at least one blade is decreased in relation to a thickness at the tips of the blade.

47. An impeller as claimed in claim **20**, wherein the means for amplifying and for distributing comprises at least one zone where a thickness of at least one blade is decreased in relation to a thickness at the tips of the blade.

48. An impeller as claimed in claim **26**, wherein the means for amplifying and for distributing comprises at least one zone where a thickness of at least one blade is decreased in relation to a thickness at the tips of the blade.

49. An impeller as claimed in claim **14**, wherein the means for amplifying and for distributing comprises a curvature of the tip of at least one face of a transverse profile of the blade in a direction of lowest pressure.

50. An impeller as claimed in claim **15**, wherein the means for amplifying and for distributing comprises a curvature of the tip of at least one face of a transverse profile of the blade in a direction of lowest pressure.

51. An impeller as claimed in claim **16**, wherein the means for amplifying and for distributing comprises a curvature of the tip of at least one face of a transverse profile of the blade in a direction of lowest pressure.

52. An impeller as claimed in claim **17**, wherein the means for amplifying and for distributing comprises a curvature of the tip of at least one face of a transverse profile of the blade in a direction of lowest pressure.

53. An impeller as claimed in claim **18**, wherein the means for amplifying and for distributing comprises a curvature of the tip of at least one face of a transverse profile of the blade in a direction of lowest pressure.

54. An impeller as claimed in claim **19**, wherein the means for amplifying and for distributing comprises a curvature of the tip of at least one face of a transverse profile of the blade in a direction of lowest pressure.

55. An impeller as claimed in claim **20**, wherein the means for amplifying and for distributing comprises a curvature of the tip of at least one face of a transverse profile of the blade in a direction of lowest pressure.

56. An impeller as claimed in claim **26**, wherein the means for amplifying and for distributing comprises a curvature of the tip of at least one face of a transverse profile of the blade in a direction of lowest pressure.

57. An impeller as claimed in claim **49**, wherein tips of two faces of the transverse profile are curved in a direction of lowest pressure.

58. A device for compressing or expanding a multiphase fluid comprising at least one liquid phase and a gas phase comprising a helical-radial-axial multiphase compressor or expander impeller including at least one blade mounted on a hub, the multiphase impeller being disposed in a casing of a multiphase fluid compression or expansion device; and wherein at least one blade comprises means for amplifying and for distributing clearance flows between the at least one blade and the casing.

* * * * *