No. 858,155. PATENTED JUNE 25, 1907

T. F. CURLEY.

BLADE HOLDER FOR RAZOR BLADES

APPLICATION FILED OCT. 26, 1906.

Fig. 1.

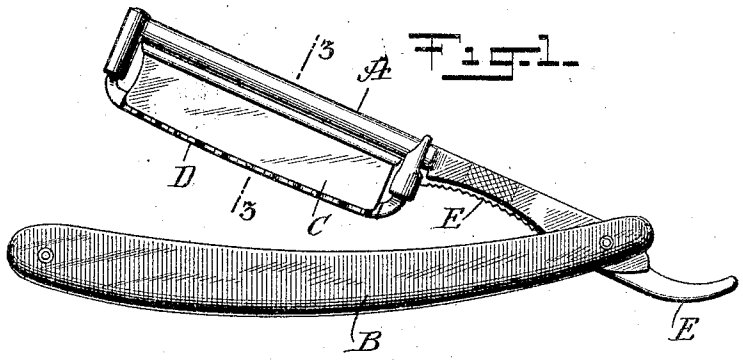

Fig. 2.

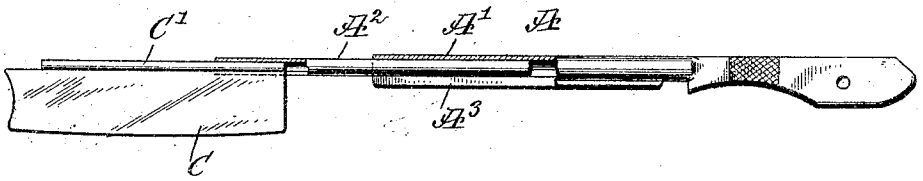

Fig. 3.

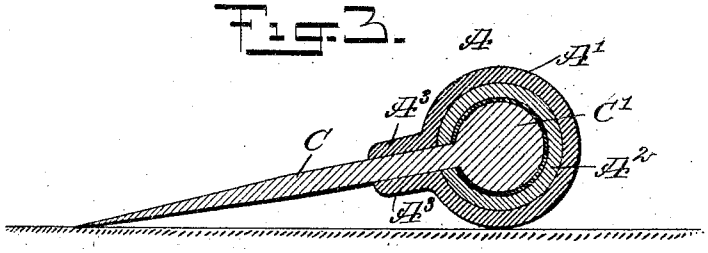

Fig. 4.

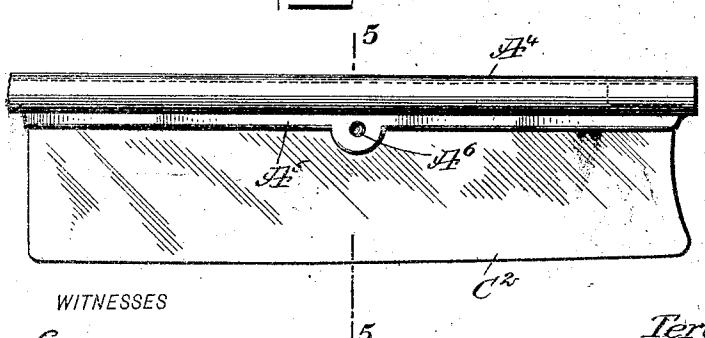

Fig. 5.

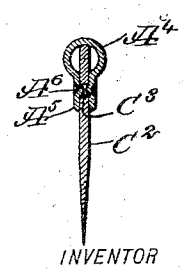

WITNESSES

Geo. H. Naylor

Theo. G. Hoster

INVENTOR

Terence F. Curley

BY Munn & Co

ATTORNEYS

UNITED STATES PATENT OFFICE.

TERENCE F. CURLEY, OF NEW YORK, N. Y.

BLADE-HOLDER FOR RAZOR-BLADES.

No. 858,155. Specification of Letters Patent. Patented June 25, 1907.

Application filed October 26, 1906. Serial No. 340,652.

To all whom it may concern:

Be it known that I, TERENCE F. CURLEY, a citizen of the United States, and a resident of the city of New York, (borough of Manhattan,) in the county of Kings and State of New York, have invented a new and Improved Blade-Holder for Razor-Blades, of which the following is a full, clear, and exact description.

The object of the invention is to provide a new and improved blade holder for razor blades used in ordinary and safety razors, and to be held in strapping and honing machines and other devices, the blade holder being arranged to hold a blade securely in position during the use of the razor, machine or other device, and to allow an interchange of blades of different thicknesses.

The invention consists of novel features and parts and combinations of the same, which will be more fully described hereinafter and then pointed out in the claims.

A practical embodiment of the invention is represented in the accompanying drawings forming a part of this specification, in which similar characters of reference indicate corresponding parts in all the views.

Figure 1 is a side elevation of the improvement as applied to an ordinary razor having a safety guard; Fig. 2 is a sectional plan view of the improvement and showing the inner lining partly withdrawn from the shell and the razor blade partly withdrawn from the lining; Fig. 3 is an enlarged cross section of the improvement on the line 3—3 of Fig. 1; Fig. 4 is an enlarged side elevation of a modified form of the improvement, and Fig. 5 is a cross section of the same on the line 5—5 of Fig. 4.

The blade holder A shown in Figs. 1, 2 and 3, forms part of a safety razor and is pivoted on a handle B and carries a removable razor blade C and a removable guard D adapted to be locked in place by a locking lever E, as more fully shown and described in the Letters Patent of the United States, No. 398,947, granted to T. F. Curley and A. S. Granger, March 5, 1889, so that further description of the same is not deemed necessary.

The blade holder A consists of an exterior tubular shell A′ and a tubular inner lining A^2, the lining and shell having registering slots for the passage of the razor blade C provided with a cylindrical back C′ snugly fitting into the lining A^2. The shell A′ is provided at the walls of its slot with outwardly extending clamping flanges A^3 engaging the opposite faces of the razor blade C, as plainly indicated in the drawings, the distance between the clamping flanges A^3 being slightly less than the thickness of the razor blade C, so that when the latter is placed in position in the holder A the flanges A^3 are sprung apart, and when the razor blade C has been pushed to final position in the blade holder A then the clamping flanges A^3 by their own resiliency hold the razor blade C securely in position in the blade holder, so that no further fastening or holding devices are required for maintaining the razor blade C in position in the blade holder during the use of the razor or during the use of the honing or strapping machine having a blade holder of the construction described. It will also be seen, that by the arrangement described, blades of slightly different thicknesses can be interchangeably used and securely held in position in the blade holder.

In making and using thin razor blades C and providing a holder for the same, it is desirable to use an outer shell and an inner lining so as to obtain a proper inner fitting diameter for the blade back C′, and to obtain a sufficient thickness for the outer diameter of the shell A′ for proper honing or producing a good cutting edge when honing or strapping the razor blade, as indicated in Fig. 3. Now by having the shell A′ of steel or a like resilient material and the lining A^2 of brass or the like, it is evident that the clamping flanges A^3 readily accommodate thin razor blades C of slightly varying thicknesses without varying the outer or inner diameters of the blade holder, at the same time insuring a firm holding of the blade in position in the holder, as above described.

The back C′ shown in Fig. 3 is preferably covered by an exterior lining, preferably made of metal (preferably brass) other than steel of which the blade in made, to allow of easily slipping the back into the brass lining C′.

As illustrated in Figs. 4 and 5 the razor blade C^2 is without a cylindrical back and fits into the slotted blade holder A^4 having clamping flanges A^5 for holding the blade C^2 in position in the holder A^4 by the resiliency of the said clamping flanges A^5. In order, however, to prevent any longitudinal movement the razor blade C^2 is provided with a transverse opening C^3, into which project offsets or teats A^6 formed integrally on the clamping

flanges A^5, as will be readily understood by reference to Figs. 4 and 5.

The blade holder shown and described is very simple in construction and can be readily used in razors, honing or strapping machines and other devices for holding very thin blades, concave or other blades.

Having thus described my invention, I claim as new and desire to secure by Letters Patent:

1. A blade holder for holding razor blades in position, and comprising an exterior tubular shell cylindrical in shape and a removable tubular inner lining cylindrical in shape and closely fitting the shell, the lining and shell having registering longitudinal slots for the passage of the razor blade, the said external shell being provided at the walls of its slot with outwardly extending clamping flanges adapted to engage opposite faces of the razor blade.

2. A blade holder for holding razor blades in position, and comprising an exterior hollow metal shell formed of resilient material, the said shell being cylindrical in shape and having a longitudinal slot, the shell being provided at the walls of said slot with outwardly extending clamping members, and a removable hollow cylindrical lining for said shell formed of a metal different from that of the shell, the said lining fitting closely within the shell and having a longitudinal slot registering with the slot in the shell.

3. The combination with a razor blade having a cylindrical back, of a blade holder comprising an exterior hollow cylindrical shell slotted in the direction of its length and provided at the walls of its slot with integral clamping arms adapted to engage opposite faces of the razor blade, and an interior cylindrical lining fitting within the said shell, the cylindrical back of the razor blade snugly fitting into the lining of the shell.

4. The combination with a razor blade having a cylindrical back provided with an exterior covering, of a blade holder comprising an exterior tubular shell cylindrical in shape, the said shell being slotted in the direction of its length and provided with integral clamping arms, and a removable interior cylindrical lining for the said shell having a registering slot, the covered back of the blade fitting closely within the said lining.

In testimony whereof I have signed my name to this specification in the presence of two subscribing witnesses.

TERENCE F. CURLEY.

Witnesses:

THEO. G. HOSTER,

EVERARD B. MARSHALL.