US011071373B2

(12) **United States Patent**
Hohlbein

(10) **Patent No.: US 11,071,373 B2**
(45) **Date of Patent: *Jul. 27, 2021**

(54) **IMPLEMENT AND METHOD OF FORMING THE SAME**

(71) Applicant: **Colgate-Palmolive Company**, New York, NY (US)

(72) Inventor: **Douglas Hohlbein**, Hopewell, NJ (US)

(73) Assignee: **Colgate-Palmolive Company**, New York, NY (US)

(*) Notice: Subject to any disclaimer, the term of this patent is extended or adjusted under 35 U.S.C. 154(b) by 343 days.

This patent is subject to a terminal disclaimer.

(21) Appl. No.: **15/959,334**

(22) Filed: **Apr. 23, 2018**

(65) **Prior Publication Data**

US 2018/0235356 A1 Aug. 23, 2018

Related U.S. Application Data

(63) Continuation of application No. 14/755,230, filed on Jun. 30, 2015, now Pat. No. 9,980,557, which is a (Continued)

(51) **Int. Cl.**
A46B 15/00 (2006.01)
A46B 9/04 (2006.01)
(Continued)

(52) **U.S. Cl.**
CPC ***A46B 15/0087*** (2013.01); ***A46B 9/04*** (2013.01); ***B29C 45/1642*** (2013.01); *B29K 2105/16* (2013.01); *B29K 2995/002* (2013.01); *B29K 2995/0025* (2013.01); *B29K 2995/0026* (2013.01); *B29K 2995/0029* (2013.01); *B29L 2031/425* (2013.01); *B29L 2031/722* (2013.01)

(58) **Field of Classification Search**
CPC A46B 15/0085; A46B 15/0087; A46B 15/0089; A46B 9/04; A46B 2200/1066; G09F 23/0075; B25G 1/10; B29L 2031/42; B29L 2031/425; B29L 2031/722
USPC 40/314, 317, 330, 334, 642.02, 661
See application file for complete search history.

(56) **References Cited**

U.S. PATENT DOCUMENTS

5,264,267 A 11/1993 Wang
5,440,808 A 8/1995 Wexler
(Continued)

FOREIGN PATENT DOCUMENTS

BG 4069-0001 2/2001
CN 303054912 12/2014
(Continued)

OTHER PUBLICATIONS

Computer generated English translation of JP 2002-153322 A, May 2002, Moriwaka et al. (Year: 2002).*
(Continued)

Primary Examiner — Laura C Guidotti

(57) **ABSTRACT**

An implement having a base structure with a core component and a shell component that surrounds the core component. The core component may include a body formed of a rigid material and decorative elements embedded within the body. The shell component may be formed of a substantially transparent material so that the decorative elements of the core are visible through the shell component.

10 Claims, 12 Drawing Sheets

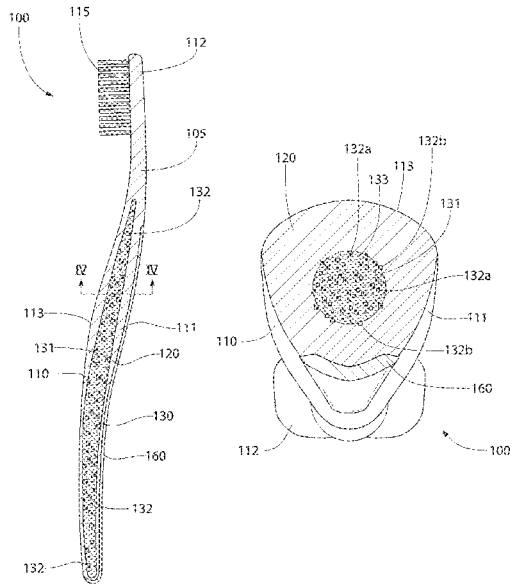

Related U.S. Application Data

continuation-in-part of application No. 14/400,956, filed as application No. PCT/US2012/038235 on May 17, 2012, now Pat. No. 9,554,640.

(51) **Int. Cl.**

B29C 45/16	(2006.01)
B29L 31/42	(2006.01)
B29K 105/16	(2006.01)
B29L 31/00	(2006.01)

(56) **References Cited**

U.S. PATENT DOCUMENTS

5,517,712	A	5/1996	Schiano	
5,881,425	A	3/1999	Hudson et al.	
5,966,769	A	10/1999	Tortorice	
6,108,869	A *	8/2000	Meessmann	A46B 5/02 16/430
6,345,406	B1	2/2002	Dodd	
6,464,920	B1	10/2002	Kraemer	
6,919,038	B2	7/2005	Meyer et al.	
9,980,557	B2 *	5/2018	Hohlbein	A46B 9/04
2002/0124364	A1	9/2002	Gross et al.	
2003/0070259	A1	4/2003	Brown et al.	
2003/0070309	A1	4/2003	Brown et al.	
2003/0135943	A1	7/2003	Meyer et al.	
2005/0015907	A1	1/2005	Georgi et al.	
2005/0193510	A1	9/2005	Kemp	
2007/0151058	A1	7/2007	Georgi et al.	
2009/0313778	A1 *	12/2009	Wong	A46B 15/0016 15/167.1
2010/0000039	A1	1/2010	Vega-Cortes	
2013/0198986	A1	8/2013	Mantell et al.	
2014/0173853	A1	6/2014	Kirchhofer et al.	
2014/0178650	A1	6/2014	Schnurr	
2015/0164211	A1	6/2015	Hohlbein	

FOREIGN PATENT DOCUMENTS

CZ	30645-0001		11/2001	
CZ	32613-0001		2/2005	
EP	0 673 743		9/1995	
JP	2002-15332	A *	5/2002	A46B 5/00
JP	2002-219900	A *	8/2002	B44C 5/08
JP	D1259839		1/2006	
JP	D1321142		2/2008	
SE	54130-0001		8/1993	
SK702001000000154-0001			3/2002	
WO	WO 2009/148440		12/2009	
WO	WO 2012/105964		8/2012	

OTHER PUBLICATIONS

Computer generated English translation of JP 2002-219900 A, Sugaya, Aug. 2002. (Year: 2002).*

International Search Report and the Written Opinion issued in International Application PCT/US2012/038235 dated Feb. 7, 2013.

Kids' Sparkle Toothbrush, SmartPractice.com, 2011-2014, 1 p.

Supersmile Crystal Collection Toothbrush, Drugstore.com, 1999-2015, 6 pp.

* cited by examiner

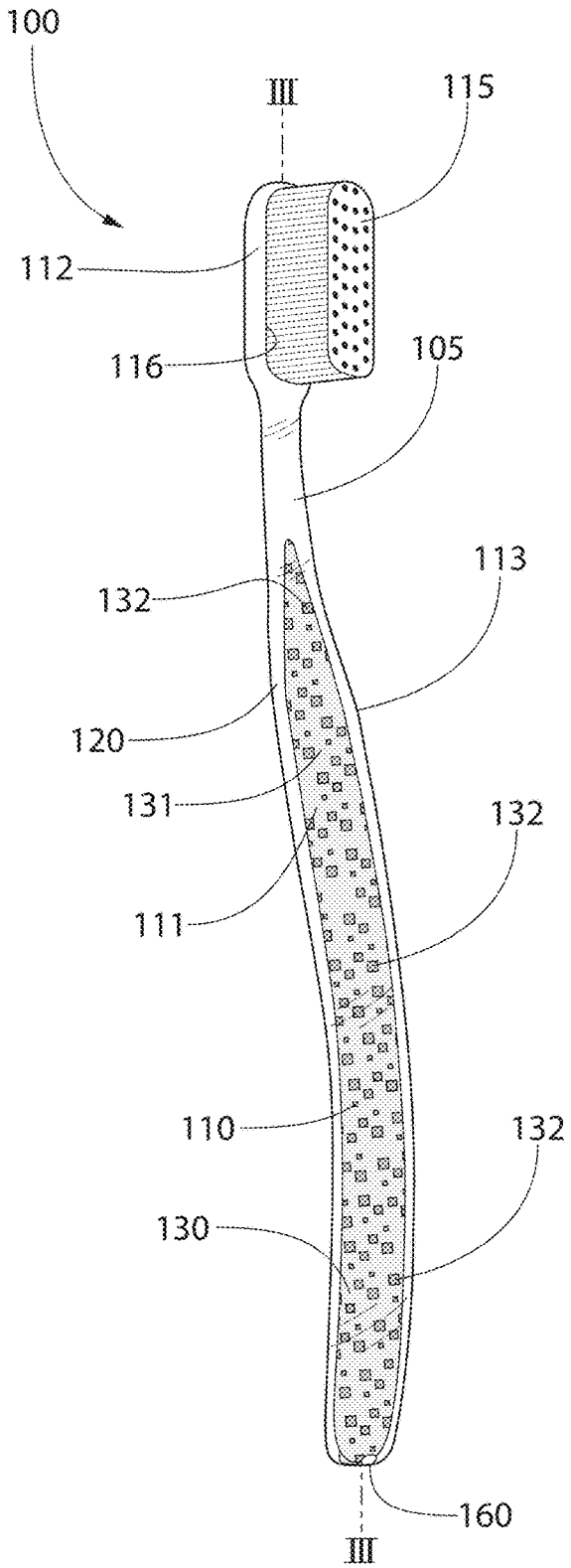
100
III
115
112
116
105
113
132
120
131
132
111
110
132
130
160
III

FIG. 1

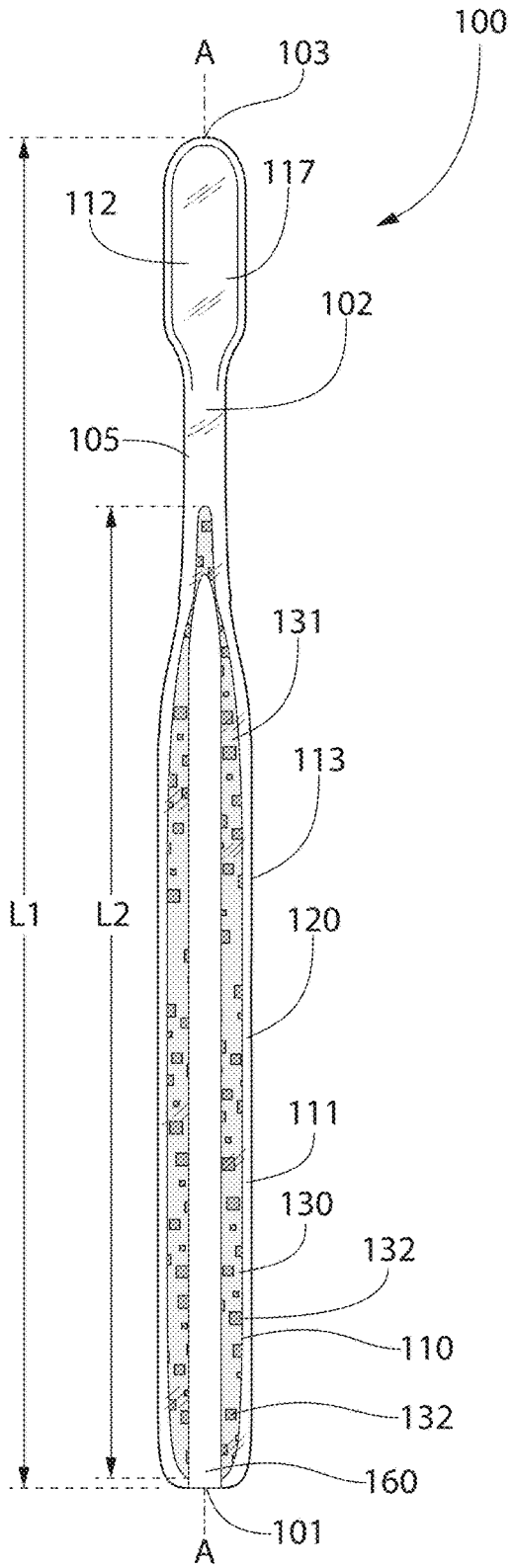
A
103
100
117
112
102
105
131
113
L1
L2
120
111
130
132
110
132
160
101
A

FIG. 2

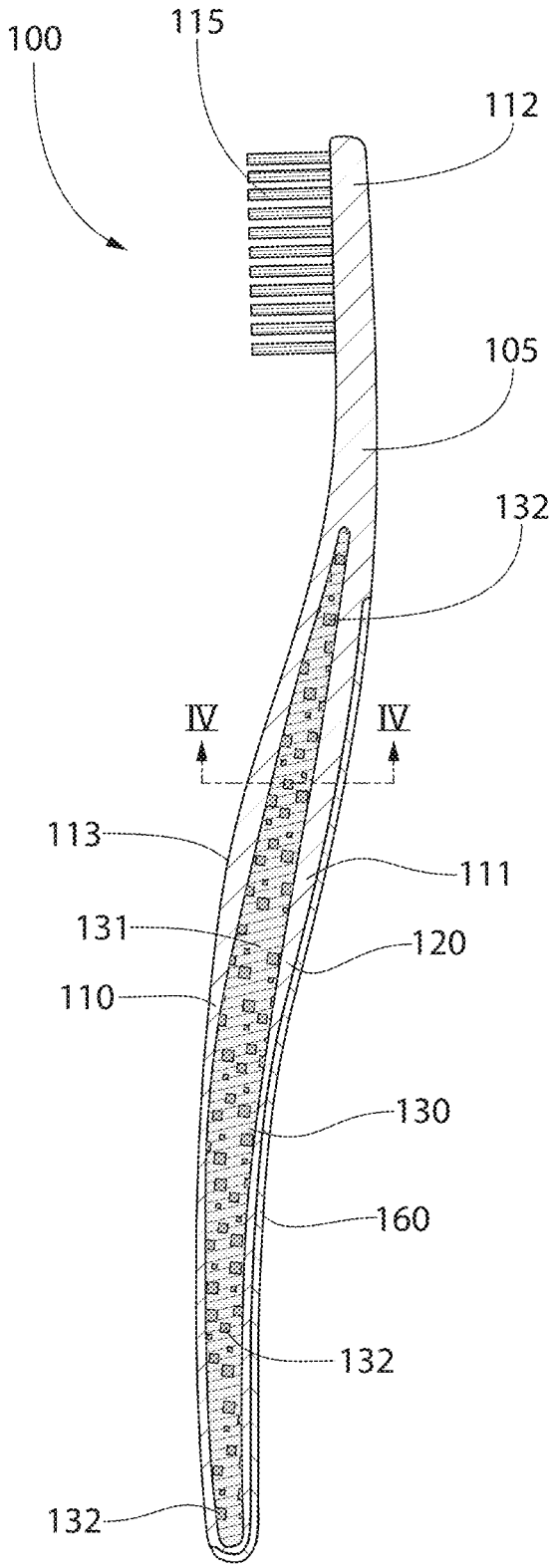

FIG. 3

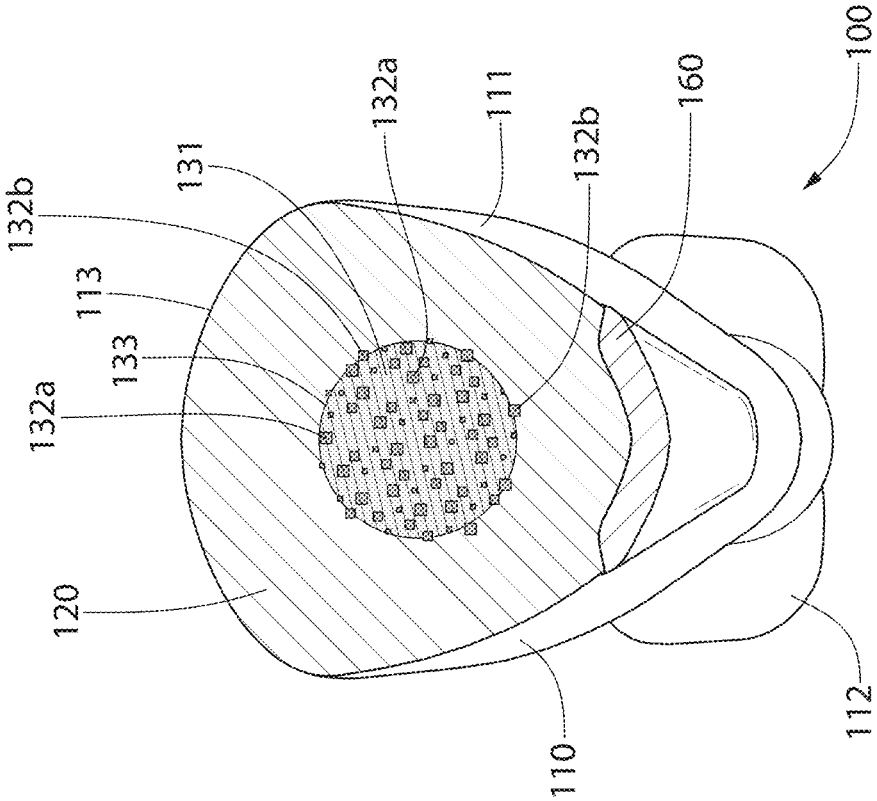
132b
113
132a
120
131
133
132a
111
132b
160
100
110
112

FIG. 4B

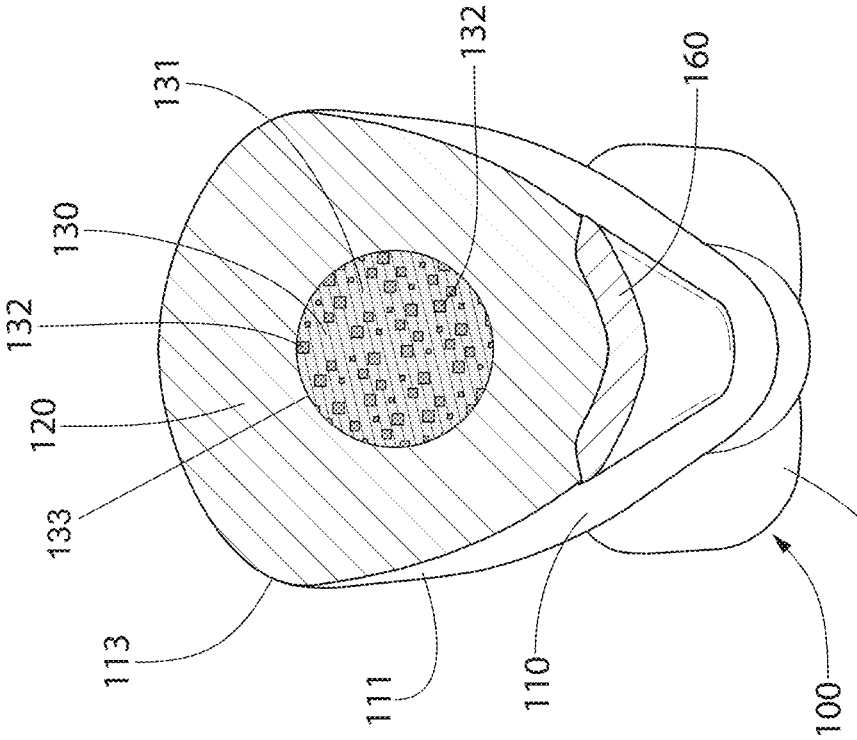
131
130
132
120
133
113
132
160
111
110
100
112

FIG. 4A

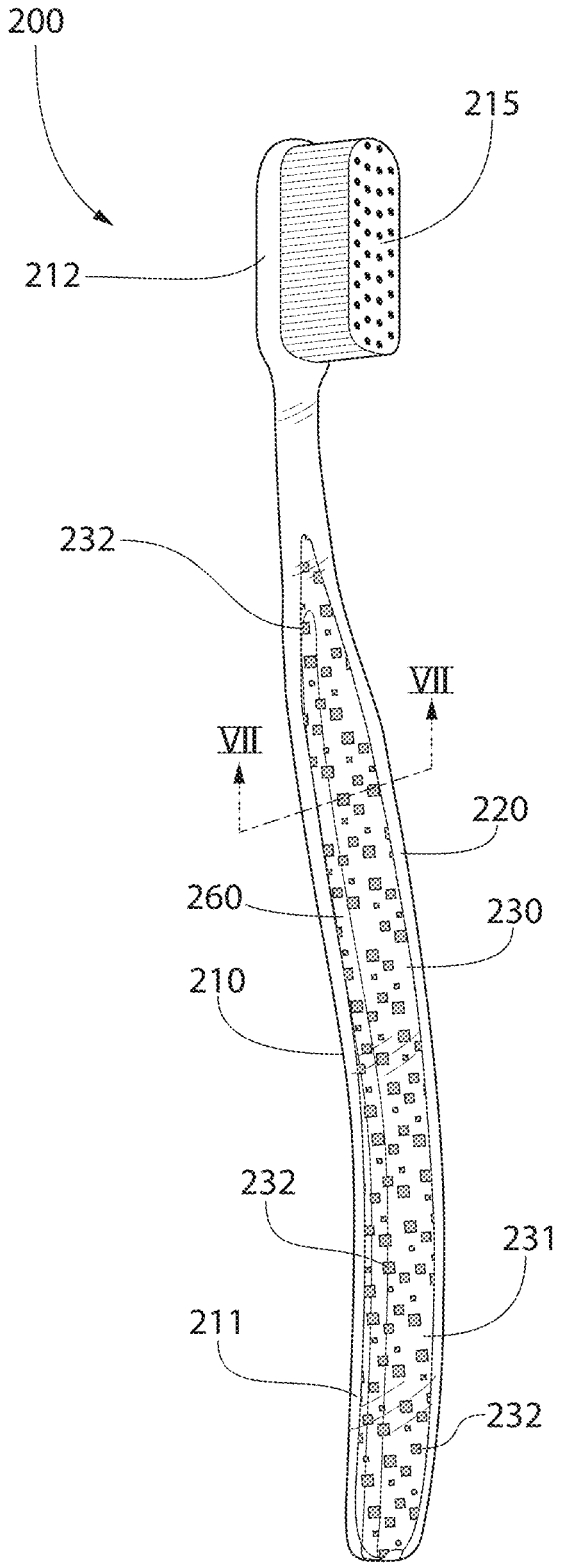
200
215
212
232
VII
VII
220
260
230
210
232
231
211
232

FIG. 5

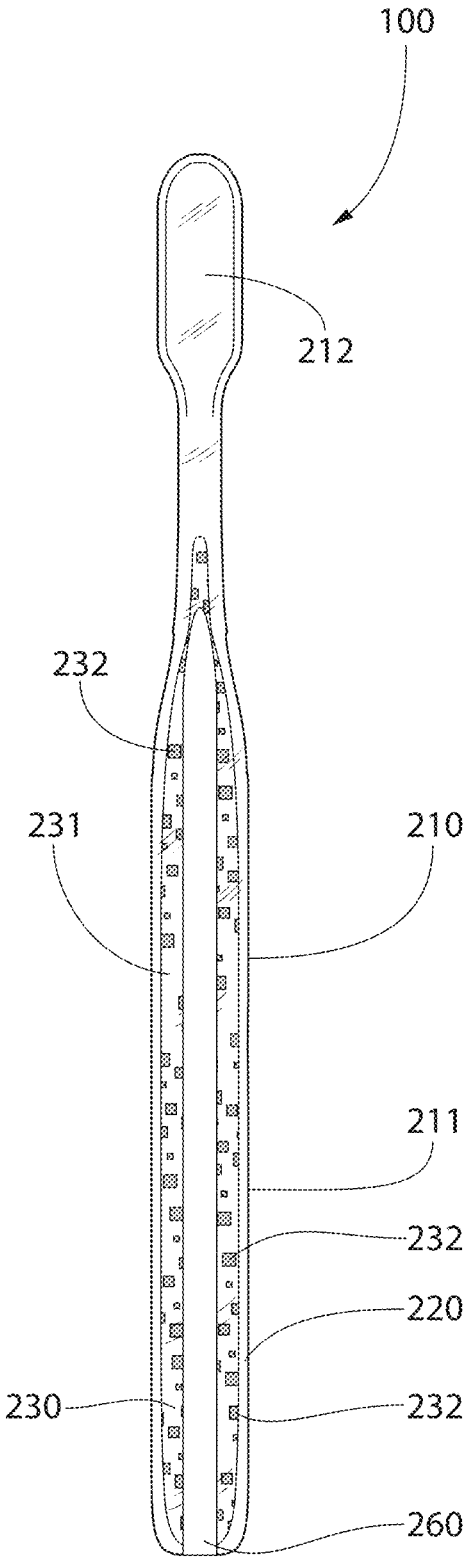
100
212
232
231
210
211
232
220
230
232
260

FIG. 6

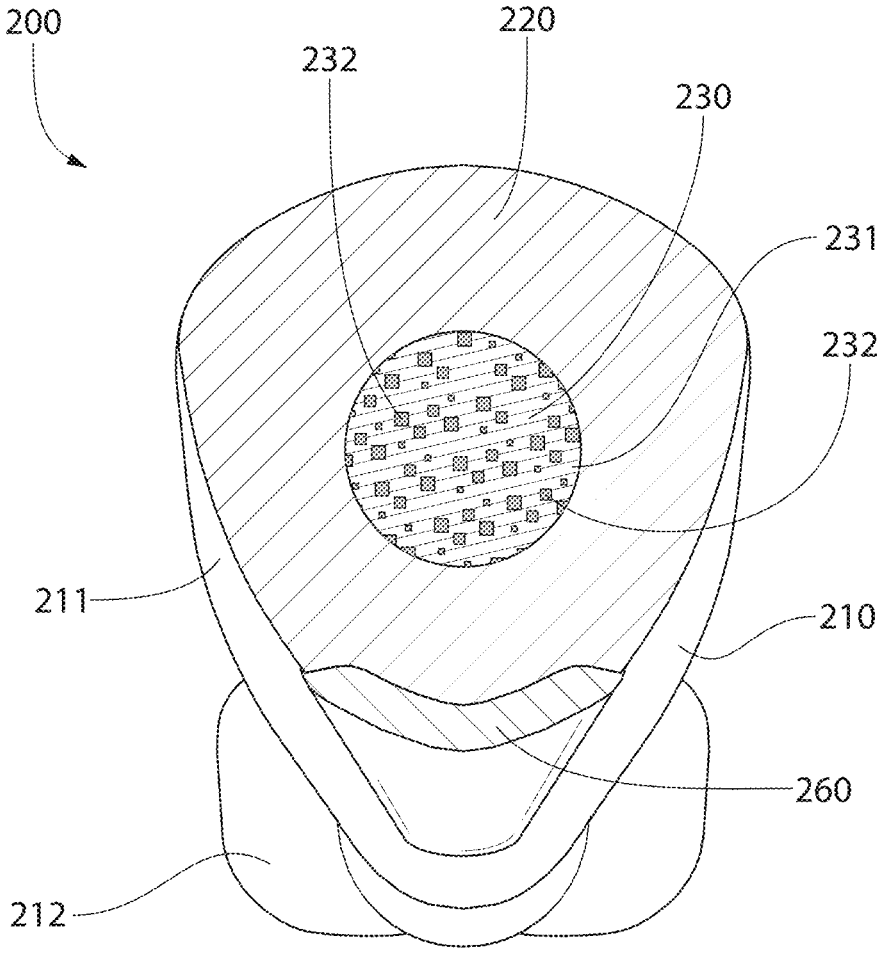

FIG. 7

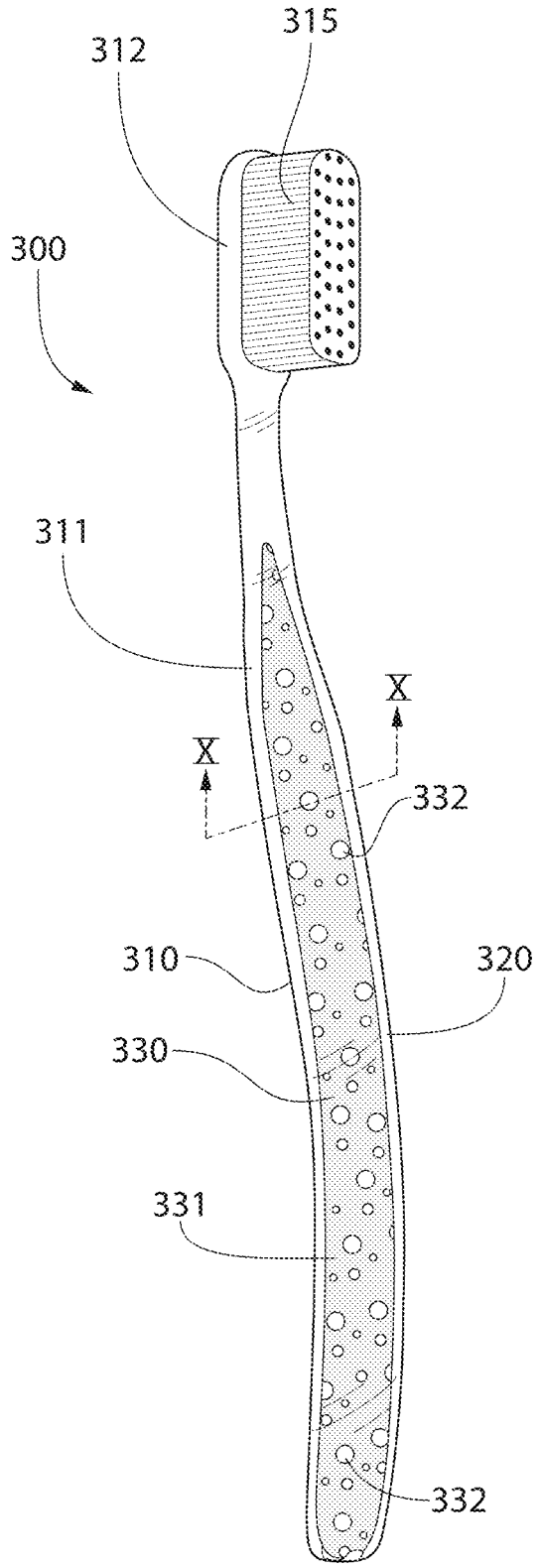
315
312
300
311
X
X
332
310
320
330
331
332

FIG. 8

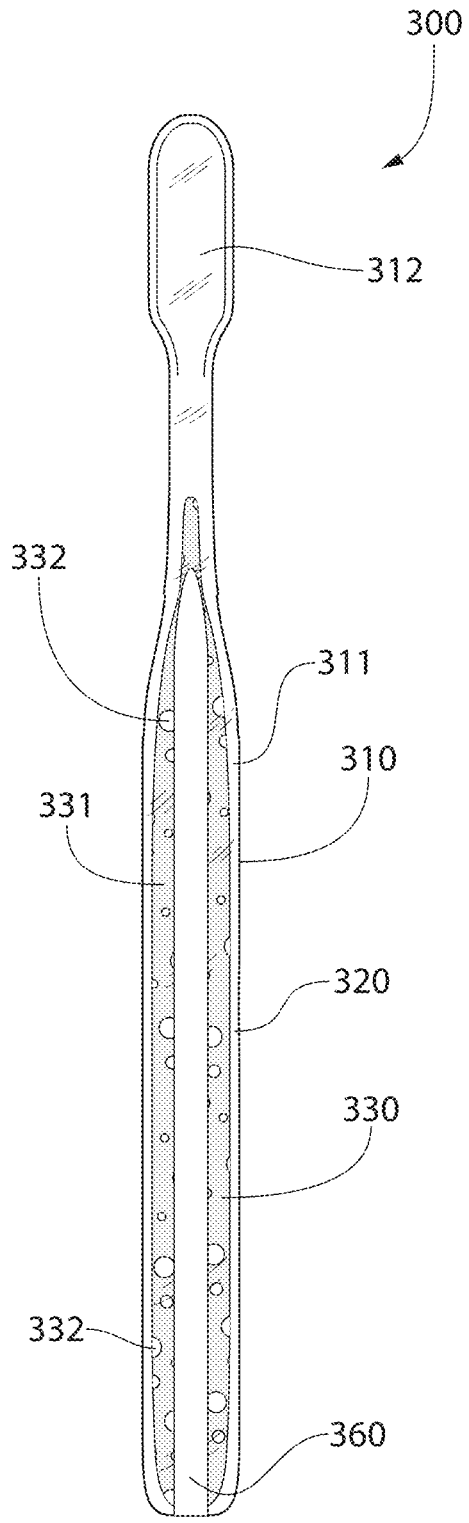
300
312
332
311
310
331
320
330
332
360

FIG. 9

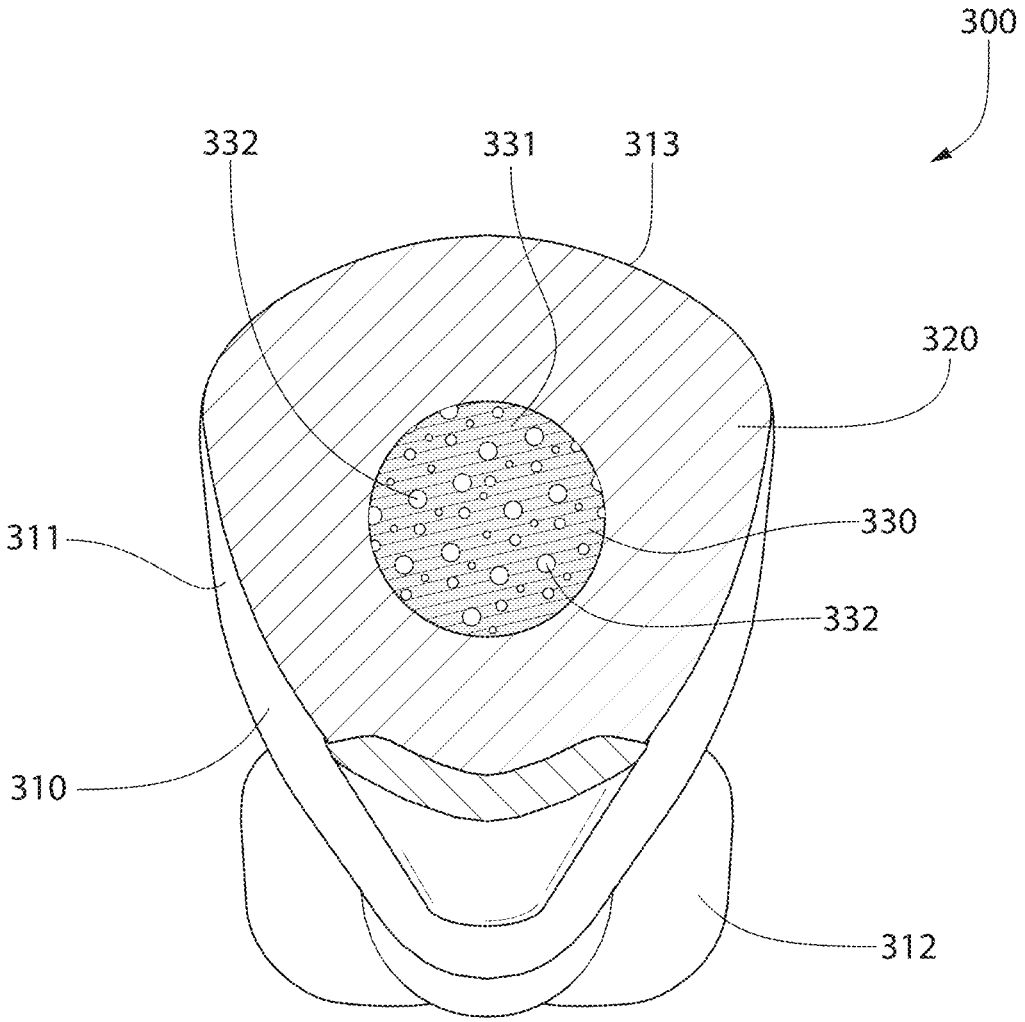

FIG. 10

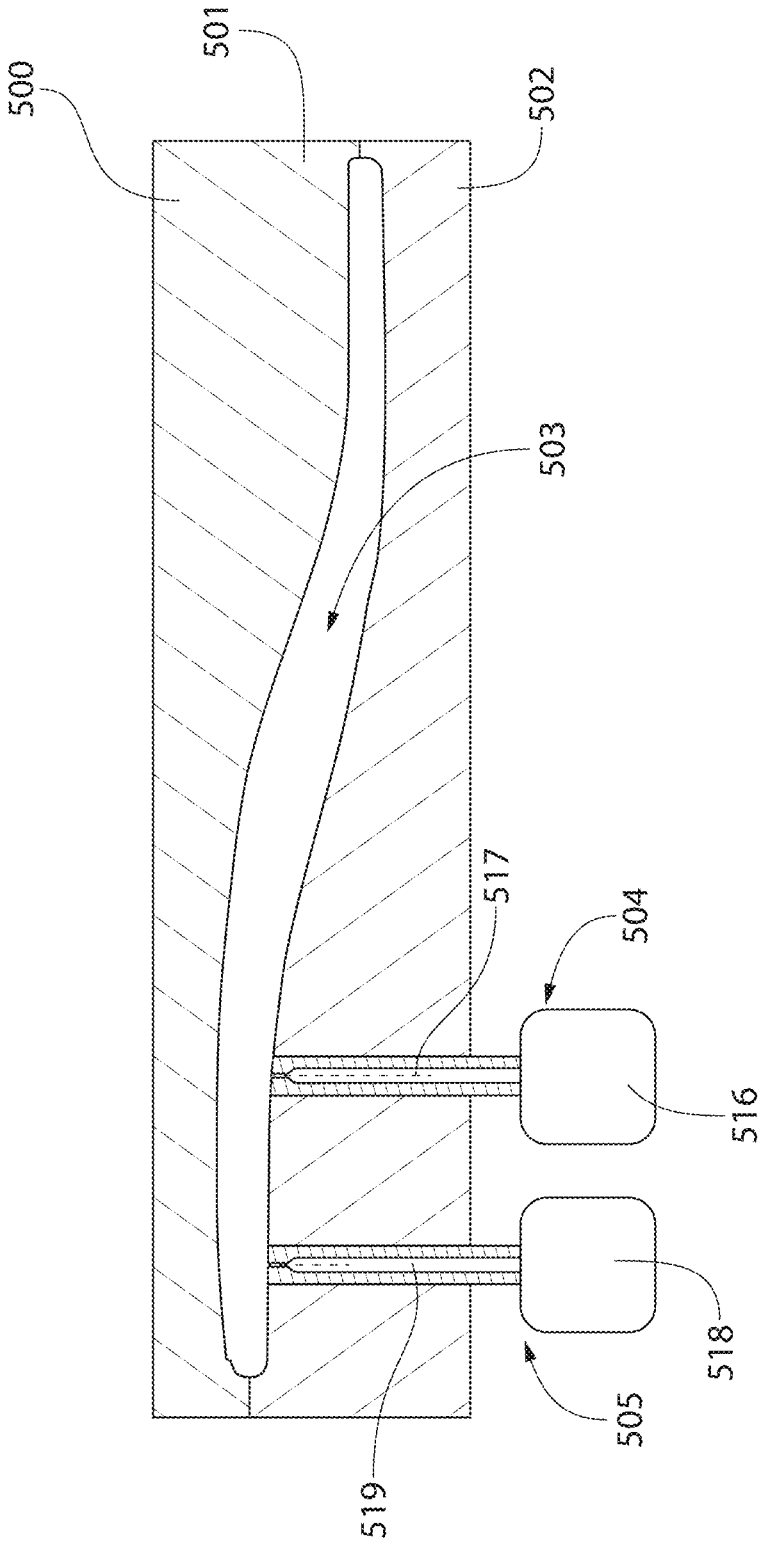

FIG. 11

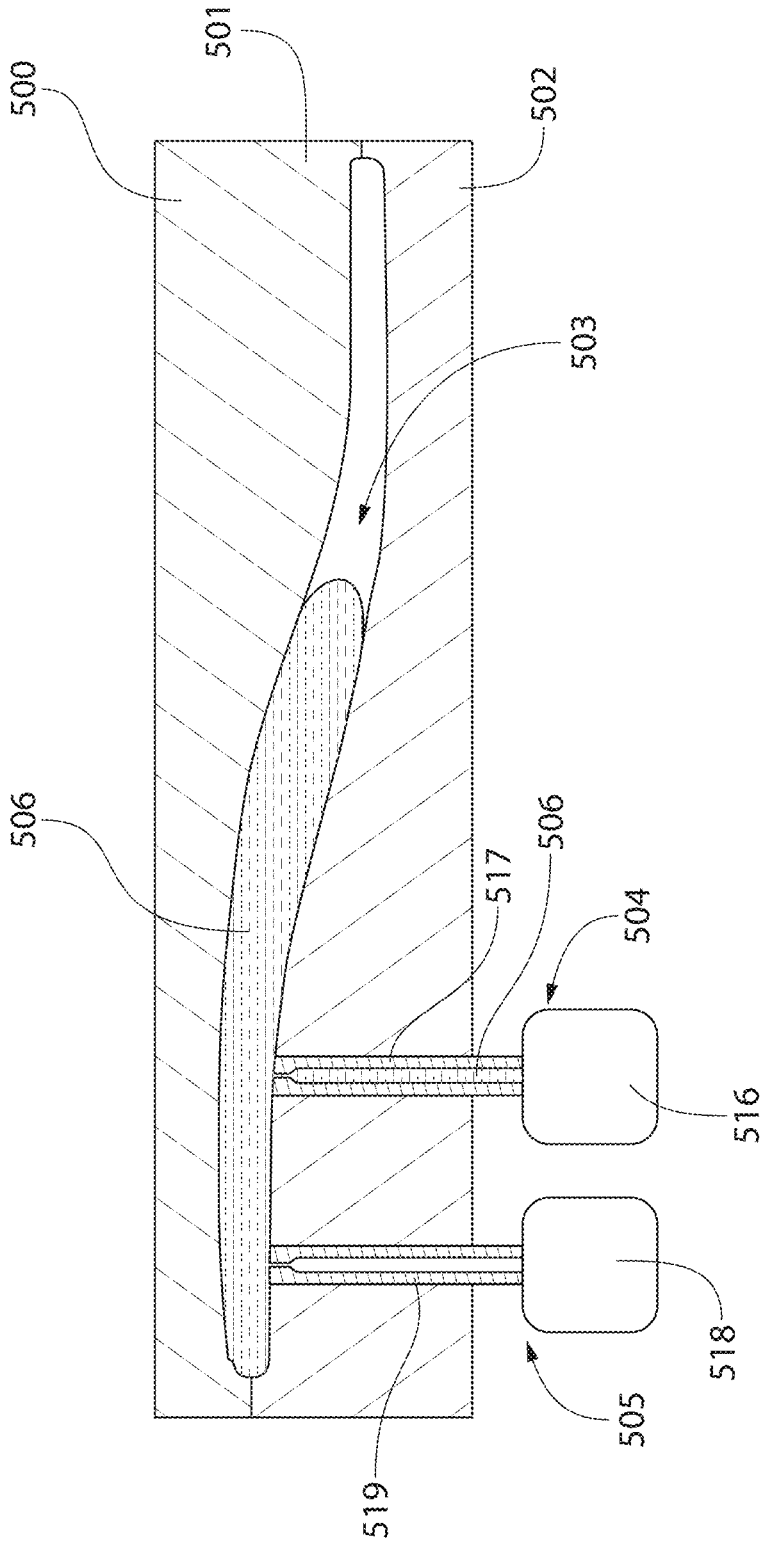

FIG. 12

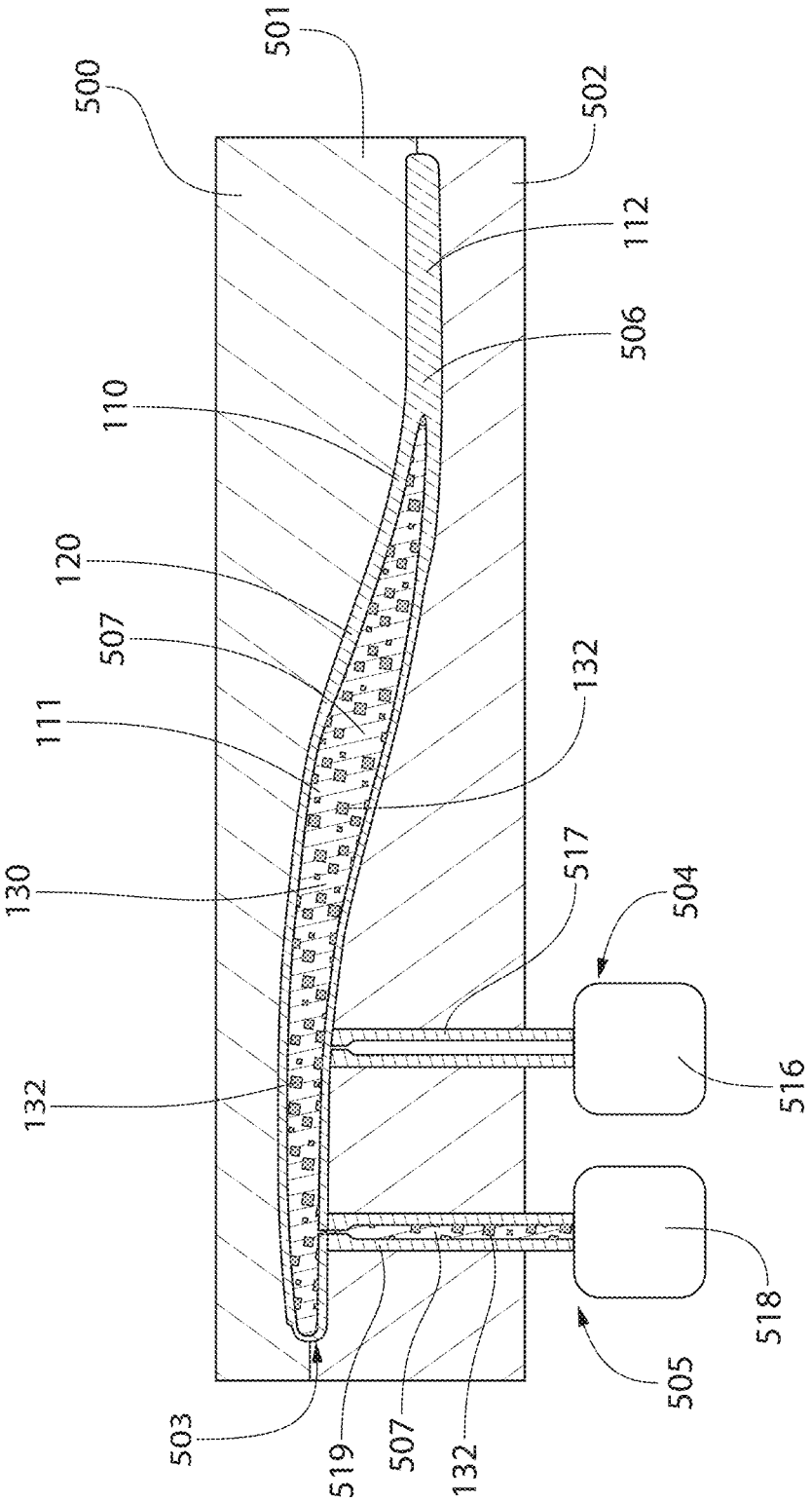
500
501
502
112
506
110
120
507
111
132
130
517
504
516
132
518
505
503
519
507
132

FIG. 13

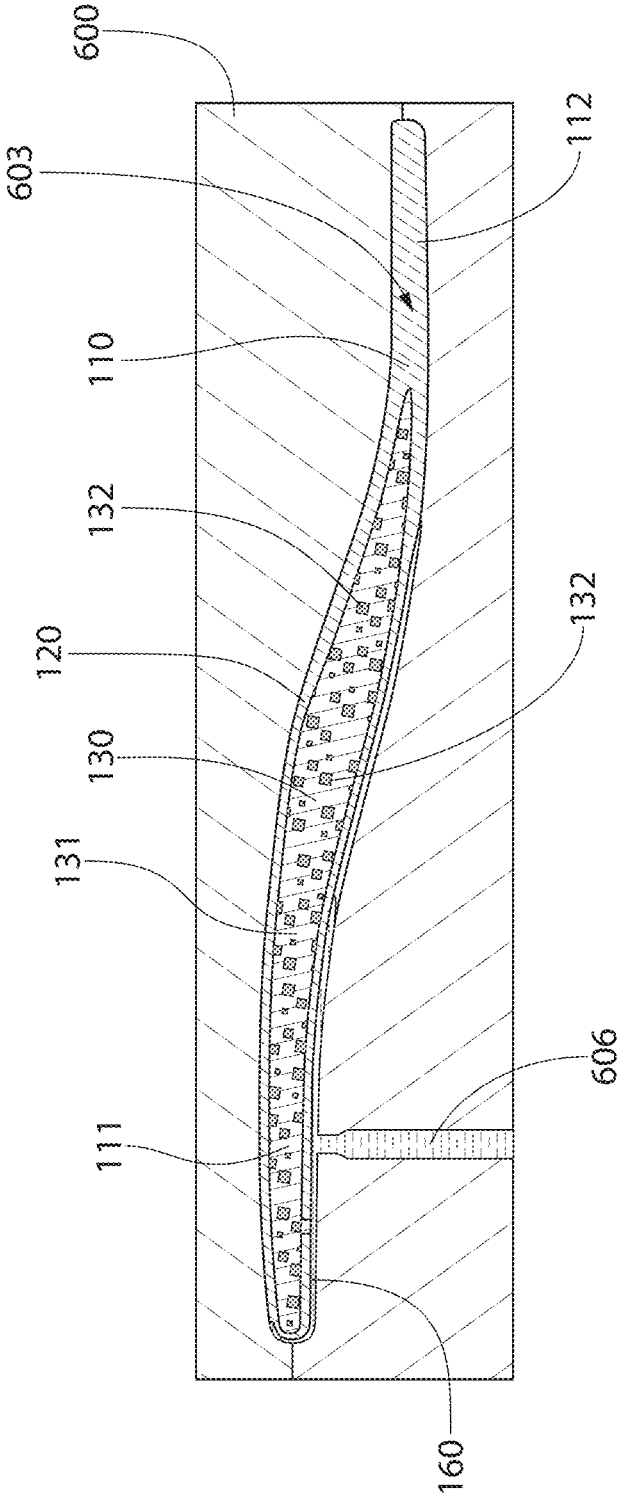

FIG. 14

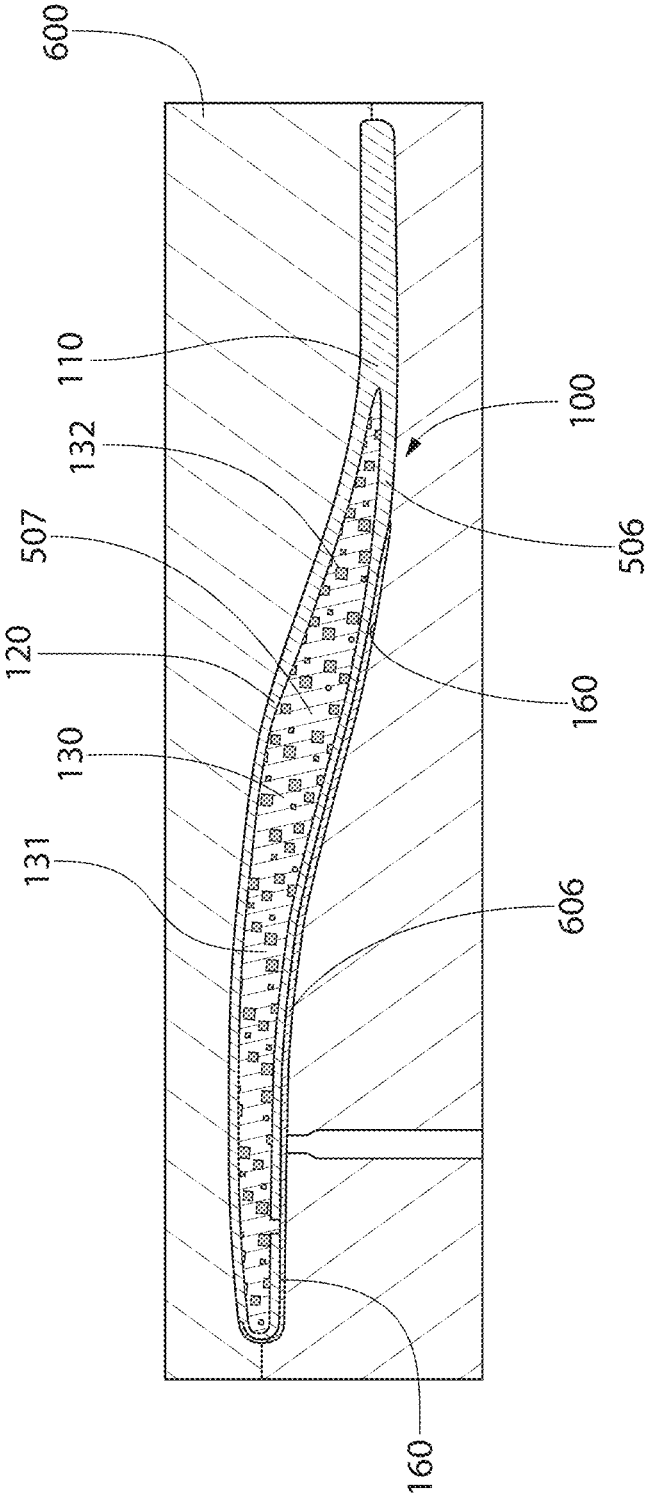

FIG. 15

IMPLEMENT AND METHOD OF FORMING THE SAME

CROSS-REFERENCE TO RELATED APPLICATIONS

The present application is a continuation of U.S. patent application Ser. No. 14/755,230, filed Jun. 30, 2015, which is a continuation-in-part of U.S. patent application Ser. No. 14/400,956, filed Nov. 13, 2014, which is a U.S. national stage application under 35 U.S.C. § 371 of Patent Cooperation Treaty Application No. PCT/US2012/038235, filed May 17, 2012, the entireties of which are incorporated herein by reference.

BACKGROUND

The oral care implement industry is rather competitive and innovation of an oral care implement with desirable aesthetics can be financially beneficial to a seller of such products. Although designing an oral care implement with improved gripability and cleaning benefits may provide a seller of such products with additional marketing terminology, in the end it is often the look of an oral care implement that drives sales. Current trends to enhance the aesthetics of oral care implements includes forming oral care implements in multiple mold cavities or out of multiple components that must be coupled together, which increases the time and expense required to manufacture such oral care implements. Thus, a need exists for an oral care implement with a desirable and attractive appearance that is eye catching and simple in design so that manufacturing costs may be reduced and sales increased.

BRIEF SUMMARY

The present invention may be directed, in one aspect, to an implement having a base structure that includes a core component and a shell component. The core component may include a body and decorative elements therein. The shell component may be a transparent rigid material. Thus, the decorative elements of the core component are visible through the shell component to achieve a desirable aesthetic effect. In other embodiments the present invention may be directed to a method of forming such an implement.

In one embodiment, the invention can be an implement comprising: a base structure comprising a core component and a shell component, the shell component encapsulating the core component and forming an outer surface of the base structure; the shell component formed of a substantially translucent first material; the core component comprising a body formed of a rigid material and a plurality of decorative elements embedded within the rigid material, at least one of the plurality of decorative elements forming a portion of an outer surface of the core component, the at least one of the plurality of decorative elements of the core component being visible through the substantially translucent first material of the shell component; and wherein the plurality of decorative elements comprises discrete particles.

In another embodiment, the invention can be an implement comprising: a base structure comprising a core component and a shell component surrounding the core component; the shell component and a body of the core component being formed of a substantially transparent first rigid material; and the core component comprising a plurality of decorative elements embedded within and dispersed throughout the body and visible through the shell component and the body of the core component; and wherein the shell component is free of any decorative elements.

In yet another embodiment, the invention can be a method of forming an implement comprising: a) providing a first mold that defines a first mold cavity, the first mold cavity having a shape that corresponds with a shape of a base structure of the implement; b) injecting a first material into the first mold cavity, the first material being transparent or translucent; and c) injecting a second material into the first material in the first mold cavity, thereby displacing the first material within the first mold cavity and forming the base structure, the second material forming a core component of the base structure and the first material forming a shell component of the base structure that surrounds the core component; and wherein a plurality of decorative elements are dispersed throughout the second material of the core component and visible through the first material of the shell component.

Further areas of applicability of the present invention will become apparent from the detailed description provided hereinafter it should be understood that the detailed description and specific examples, while indicating the preferred embodiment of the invention, are intended for purposes of illustration only and are not intended to limit the scope of the invention.

BRIEF DESCRIPTION OF THE DRAWINGS

The present invention will become more fully understood from the detailed description and the accompanying drawings, wherein:

FIG. **1** is a front perspective view of an oral care implement in accordance with a first embodiment of the present invention.

FIG. **2** is a rear view of the oral care implement of FIG. **1**.

FIG. **3** is a cross-sectional view taken along line III-III of FIG. **1**.

FIG. **4**A is a cross-sectional view taken along line IV-IV of FIG. **3**.

FIG. **4**B is a cross-sectional view taken along line IV-IV of FIG. **3** in accordance with an alternative embodiment of the present invention.

FIG. **5** is a front perspective view of an oral care implement in accordance with a second embodiment of the present invention.

FIG. **6** is a rear view of the oral care implement of FIG. **5**.

FIG. **7** is a cross-sectional view taken along line VII-VII of FIG. **6**.

FIG. **8** is a front perspective view of an oral care implement in accordance with a third embodiment of the present invention.

FIG. **9** is a rear view of the oral care implement of FIG. **8**.

FIG. **10** is a cross-sectional view taken along line X-X of FIG. **9**.

FIG. **11** is a schematic cross-sectional view of a first mold defining a first mold cavity and coupled to material injection subsystems.

FIG. **12** is a schematic cross-sectional view of the first mold of FIG. **11**, wherein a first material is being injected into the first mold cavity.

FIG. **13** is a schematic cross-sectional view of the first mold of FIG. **11**, wherein a second material is being injected into the first mold cavity to form a base structure of an oral care implement.

FIG. **14** is a schematic cross-sectional view of the base structure of FIG. **13** positioned within a second mold, wherein a third material is being injected into a second mold cavity of the second mold.

FIG. **15** is a schematic cross-sectional view of the oral care implement positioned within the second mold cavity of the second mold.

DETAILED DESCRIPTION

The following description of the preferred embodiment(s) is merely exemplary in nature and is in no way intended to limit the invention, its application, or uses.

The description of illustrative embodiments according to principles of the present invention is intended to be read in connection with the accompanying drawings, which are to be considered part of the entire written description. In the description of embodiments of the invention disclosed herein, any reference to direction or orientation is merely intended for convenience of description and is not intended in any way to limit the scope of the present invention. Relative terms such as "lower," "upper," "horizontal," "vertical," "above," "below," "up," "down," "top" and "bottom" as well as derivative thereof (e.g., "horizontally," "downwardly," "upwardly," etc.) should be construed to refer to the orientation as then described or as shown in the drawing under discussion. These relative terms are for convenience of description only and do not require that the apparatus be constructed or operated in a particular orientation unless explicitly indicated as such. Terms such as "attached," "affixed," "connected," "coupled," "interconnected," and similar refer to a relationship wherein structures are secured or attached to one another either directly or indirectly through intervening structures, as well as both movable or rigid attachments or relationships, unless expressly described otherwise. Moreover, the features and benefits of the invention are illustrated by reference to the exemplified embodiments. Accordingly, the invention expressly should not be limited to such exemplary embodiments illustrating some possible non-limiting combination of features that may exist alone or in other combinations of features; the scope of the invention being defined by the claims appended hereto.

As used throughout, ranges are used as shorthand for describing each and every value that is within the range. Any value within the range can be selected as the terminus of the range. In addition, all references cited herein are hereby incorporated by reference in their entireties. In the event of a conflict in a definition in the present disclosure and that of a cited reference, the present disclosure controls.

Referring first to FIGS. **1** and **2** concurrently, an oral care implement **100** is illustrated in accordance with one embodiment of the present invention. In the exemplified embodiment, the oral care implement **100** is in the form of a manual toothbrush. However, in certain other embodiments the oral care implement **100** can take on other forms such as being a powered toothbrush, a tongue scraper, a gum and soft tissue cleanser, a water pick, an interdental device, a tooth polisher, a specially designed ansate implement having tooth engaging elements, or any other type of implement that is commonly used for oral care. Furthermore, in still other embodiments the implement may not be limited to one that is used for oral care, and may be any type of personal care implement such as a manual or electric razor, a hairbrush, or the like. Thus, it is to be understood that the inventive concepts discussed herein can be applied to any type of oral or personal care implement unless a specific type of oral or personal care implement is specified in the claims.

In the exemplified embodiment, the oral care implement **100** comprises a base structure **110** and an elastomeric overmold **160**. The base structure **110** is formed of one or more rigid plastic materials such as for example without limitation polymers and copolymers of ethylene, propylene, butadiene, vinyl compounds, polyesters such as polyethylene terephthalate (PET), styrene-acrylonitrile (SAN), polyurethane, polyamide, cellulosic, acrylic, acrylonitrile butadiene styrene (ABS), or the like. The base structure **110** has an outer surface **113** and the elastomeric overmold **160** is coupled to the outer surface **113** such as by injection molding, adhesion, fasteners, or the like.

In certain embodiments the elastomeric overmold **160** may form a grip to prevent slippage and enhance comfort during use of the oral care implement **100**, although the elastomeric overmold **160** may also be omitted in certain embodiments as desired. The elastomeric overmold **160** may be formed of a thermoplastic elastomer or other rubber-like material that enhances comfort and gripability of the oral care implement **100** during use. Although in the exemplified embodiment the elastomeric overmold **160** is only illustrated in a strip on the rear surface of the handle portion **111** of the base structure **110**, the invention is not to be so limited. In other embodiments the elastomeric overmold **160** may extend onto the front surface of the base structure **110** to form a forefinger and thumb grip to increase comfort and prevent slippage during use. Furthermore, the elastomeric overmold **160** may extend onto the rear surface of the head portion **112** of the base structure **110** to operate as a tongue and soft tissue cleanser. The elastomeric overmold **160** may also extend onto the front surface of the head portion of the base structure **110** to operate as a rubber tooth polishing member. The elastomeric overmold **160** may be a single unitary piece formed via a single shot in an injection mold or may include several discontinuous or separated segments formed of the elastomeric material via multiple shots in an injection mold. Furthermore, various textures, protrusions, channels, ridges, or the like may be formed as part of the elastomeric overmold **160**.

In certain exemplified embodiments, the base structure **110** comprises a handle portion **111** and a head portion **112**. The handle portion **111** of the base structure **110** extends from a proximal end **101** of the oral care implement **100** to a distal end **102** of the handle portion **111**. Thus, in the exemplified embodiment the handle portion **111** includes the portion of the oral care implement **100** that is gripped during use and a neck **105** of the oral care implement **100** that forms the transition region between the handle portion **111** and the head portion **112**. The handle portion **111** of the base structure **110** is an elongated structure that provides the mechanism by which the user can hold and manipulate the oral care implement **100** during use. In the exemplified embodiment, the handle portion **111** is generically depicted having various contours for user comfort. Of course, the invention is not to be limited by the specific shape illustrated for the handle portion **111** in all embodiments and in certain other embodiments the handle portion **111** can take on a wide variety of shapes, contours, and configurations, none of which are limiting of the present invention unless so specified in the claims.

The head portion **112** of the base structure **110** extends from the distal end **102** of the handle portion **111** to a distal end **103** of the head portion **112**. In the exemplified embodiment, a plurality of tooth cleaning elements **115** are coupled to and extend from the head portion **112** of the base structure **110**. The term "tooth cleaning elements" is used in a generic sense to refer to any structure that can be used to clean,

polish, or wipe the teeth and/or soft oral tissue (e.g. tongue, cheek, gums, etc.) through relative surface contact. Common examples of "tooth cleaning elements" include, without limitation, bristle tufts, filament bristles, fiber bristles, nylon bristles, spiral bristles, rubber bristles, elastomeric protrusions, flexible polymer protrusions, combinations thereof and/or structures containing such materials or combinations. The tooth cleaning elements may include tapered bristles, non-tapered (i.e., end rounded) bristles, and combinations thereof. Any combination of the various types of tooth cleaning elements may be used on the oral care implement **100** in different embodiments.

In embodiments that use elastomeric elements as one or more of the tooth cleaning elements **115**, suitable elastomeric materials may include any biocompatible resilient material suitable for uses in an oral hygiene apparatus. To provide optimum comfort as well as cleaning benefits, the elastomeric material of any such tooth or soft tissue engaging elements may have a hardness property in the range of A8 to A25 Shore hardness. One suitable elastomeric material is styrene-ethylene/butylene-styrene block copolymer (SEBS) manufactured by GLS Corporation. Nevertheless, SEBS material from other manufacturers or other materials within and outside the noted hardness range could be used. The tooth cleaning elements **115** may be coupled to the head portion **112** of the base structure **110** using any technique known in the art, such as stapling, anchor free tufting, in-mold tufting, AMR, or the like. The invention is not to be limited by the manner in which the tooth cleaning elements **115** are coupled to the head portion **112** in all embodiments.

The head portion **112** of the oral care implement **100** is coupled to the handle portion **111** and comprises a front surface **116** and an opposing rear surface **117**. The tooth cleaning elements **115** extend from the front surface **116** of the head portion **112**. A tongue or soft tissue cleaner (not depicted) may be positioned on the rear surface **117** of the head portion **112**. In the exemplified embodiment, the head portion **112** is formed integrally with the handle portion **111** as a single unitary structure using a molding, milling, machining, or other suitable process. However, in other embodiments the handle portion **111** and the head portion **112** may be formed as separate components which are operably connected at a later stage of the manufacturing process by any suitable technique known in the art, including without limitation thermal or ultrasonic welding, a tight-fit assembly, a coupling sleeve, threaded engagement, adhesion, or fasteners. Thus the handle portion **111** and the head portion **112** may, in certain embodiments, be formed of any of the rigid plastic materials described above, although the invention is not to be so limited in all embodiments and other materials that are commonly used during toothbrush manufacture may also be used.

Referring to FIGS. **1-4**A concurrently, the oral care implement **100** will be further described. The base structure **110** of the oral care implement **100** extends from the proximal end **101** of the handle portion **111** to the distal end **103** of the head portion **112** along a longitudinal axis A-A. The base structure **110** of the oral care implement **100** comprises a shell component **120** and a core component **130**. In the exemplified embodiment, only the handle portion **111** of the base structure **110** comprises the shell and core components **120**, **130** and the head portion **112** of the base structure **110** comprises only the shell component **120**. Thus, in certain embodiments the shell component **120** and the core component **130** collectively form the handle portion **111** of the base structure **110**. However, in the exemplified embodiment the core component **130** does not extend to the head portion **112** of the base structure **110**. Thus, in the exemplified embodiment the shell component **120** forms an entirety of the head portion **112** of the base structure **110**.

Stated another way, the base structure **110** has a length L_1 measured from the distal end **101** of the handle portion **101** to the distal end **103** of the head portion **112**. The shell component **120** extends the entire length L_1 of the base structure **110**. The core component **130** has a length that is less than the length L_1 of the base structure **110** so that although the core component **130** extends from adjacent to the proximal end **101** of the base structure **110**, the core component **130** does not extend into the head portion **112** of the base structure **110**. Of course, the length L_2 of the core component **130** may be adjusted in certain embodiments so that the core component **130** may extend into the head portion **112** in some embodiments if so desired. The core component **130** is elongated in a direction of the longitudinal axis A-A and may taper in a direction towards the head portion **112**. The core component **130** may extend along an entirety of the handle portion **111** of the base structure **110** and approximately two-thirds to three-fourths of the length L_1 of the base structure **110**. Thus, a ratio L_1:L_2 may be between 1.3:1 to 1.5:1, or more specifically 1.35:1 to 1.45:1.

The core component **130** forms an interior longitudinal section of the base structure **110** and the shell component **120** forms an exterior longitudinal section of the base structure **110**. Thus, at any transverse plane taken through the base structure **110** that intersects both the shell and core components **120**, **130**, the shell component **120** has a diameter that is greater than a diameter of the core component **130**. Thus, the shell component **120** substantially surrounds the core component **120**. More specifically, the core component **130** is substantially entirely surrounded or enclosed by the shell component **120**. Stated another way, the core component **130** is circumferentially surrounded by the shell component **120** along its entire length so that no portion of the core component **130** is exposed. In the exemplified embodiment, the shell component **120** completely surrounds the core component **120** so that the entire outer surface **113** of the base structure **110** is formed by the shell component **120** and no portion of the core component **130** extends to and is exposed on the outer surface **113** of the base structure **110**.

Thus, the core component **130** appears to float within the shell component **120**. The shell component **120** may be formed of a transparent material and the core component **130** may be formed of an opaque material (or a translucent material or a tinted material) so that the core component **130** is visible through the shell component **120** to achieve a desirable aesthetic effect. As discussed in more detail below, the core component **130** may comprise a body **131** and a plurality of decorative elements **132** that are visible through the shell component **120** to enhance the aesthetic effect. The plurality of decorative elements **132** may be dispersed throughout the body **131** or located within certain regions of the body **131**.

In the exemplified embodiment the core component **130** tapers towards the head portion **112** of the base structure **110** such that the cross-sectional area of the core component **130** decreases as the core component **130** extends away from the proximal end **101** of the handle portion **111** of the base structure **110** towards the head portion **112** of the base structure **110**. However, the invention is not to be limited by the shape, length, thickness, and size of the core component **130** in all embodiments unless specifically claimed as such. The core component and shell component **120**, **130** of the base structure **110** can be formed using sandwich molding

technologies in a single mold cavity as described in more detail below with reference to FIGS. **11-13**, or by using multiple mold cavity injection molding processes.

In the exemplified embodiment, the shell component **120** comprises a substantially translucent first material. As used herein, the term translucent may include materials that are translucent that transmit and diffuse light so that objects cannot be seen clearly through the material and materials that are transparent and allow all light to pass through so that objects can be seen clearly through the material. The term translucent does not include materials that are opaque such that objects cannot be seen through the material at all. Thus, as used herein translucent should be interpreted to mean translucent and/or transparent. Materials that are translucent may be tinted. Specifically, in some embodiments the first material of the shell component **120** may be tinted and translucent. Tinted/translucent materials may be desirable for the shell component **120** to add to the aesthetics of the oral care implement **100**. When the term transparent is used herein it should be understood to mean transparent but not also translucent. In some embodiments transparent materials may be desired for the shell component **120** to ensure that the core component **130** and the decorative elements **132** dispersed within the body **131** thereof are readily visible through the shell component **120**.

Furthermore, the first material is a rigid material because it forms the main structure of the handle portion **111** and head portion **112** of the base structure **110** of the oral care implement **100**. Thus, the first material is rigid to ensure that the oral care implement **100** can be handled without bending or flexing during use. The term rigid material does not mean that the material can not bend at all because all materials will bend if a sufficient force is applied thereto. Rather, the term rigid material refers to a hard material that resists bending/flexing under normal toothbrushing pressures and forces. Thus, during normal toothbrushing the shell component **120** will retain its shape without significant flexing or bending. In certain embodiments the first material of the shell component **120** may be a hard plastic material such as copolyester, polyethylene terephthalate (PET), styrene-acrylonitrile (SAN), polyurethane, polyethylene, polyamide, cellulosic, acrylic, acrylonitrile butadiene styrene (ABS), or the like or any of the other materials described above as forming a part of the base structure **110** of the oral care implement **100**. Thus, in embodiments of the invention the first material of the shell component **120** does not include elastomeric materials such as thermoplastic elastomers (TPE), rubbers, or the like.

Furthermore, as noted above, in the exemplified embodiment the shell component **120** is substantially translucent or transparent. Thus, regardless of the degree of translucency/transparency of the shell component **120**, the shell component **120** is not opaque so that the shell component **120** can be at least partially seen through. As a result, the core component **130** is visible through the shell component **120** despite the core component **130** being substantially or entirely surrounded or encapsulated/enveloped by the shell component **120**. In certain embodiments the shell component **120** is completely clear and completely transparent. In other embodiments the shell component **120** is tinted with a color but is still translucent.

In the exemplified embodiment, the core component **130** comprises a body **131** formed of a second material and a plurality of decorative elements **132** dispersed throughout or embedded within the body **131**. In certain embodiments the second material that forms the body **131** of the core component **130** may also be a rigid material, such as any of the hard plastic materials described above for the first material of the shell component **120**. Furthermore, the second material that forms the body **131** may be transparent, translucent, or opaque and may include various different colors as will be discussed in more detail below. Different degrees of transparency and different colors can be used for the body **131** of the core component **130** to achieve a desired aesthetic.

In FIGS. **1-4**A, the shell component **120** is substantially translucent or transparent so that the core component **130** is visible through the shell component **120**. Furthermore, the core component **130** is depicted in grayscale to indicate that the core component **130** is not transparent, but rather is translucent or opaque and includes a color. Furthermore, the plurality of decorative elements **132** are depicted as having a different grayscale than the core component **130** to indicate that the decorative elements **132** are preferably opaque and may have a different color than the core component **130** so that they are readily visible through and within the core component **130**.

In the exemplified embodiment, the plurality of decorative elements **132** comprises a plurality of particles that are located within the body **131** of the core component **130** and visible through the shell component **120**. In certain embodiments, the decorative elements **132** are a plurality of discrete and spaced apart particles. In embodiments wherein the decorative elements **132** are particles, the particles may be speckles, sparkles, flakes, glitter, microspheres, pearlescent particles, or the like. The particles may be flat, two dimensional structures or shaped three-dimensional structures. The particles may take on any desired shape, including polygonal shapes, round shapes, combinations thereof, or the like. The particles may be formed of any desired material, including elastomeric materials, rigid plastics, wood, glass, metal, sand, or the like. In certain embodiments the particles will have a higher melting temperature than the material that forms the body **131** so that the particles retain their shape and do not melt during an injection molding process that forms the core component **130**. The main purpose of the particles is aesthetic, and thus any material that may be visible within the body **131** of the core component **130** to achieve the desired aesthetic effect can be used for the particles/decorative elements **132**.

In the exemplified embodiment, at least one of the plurality of decorative elements **132** forms a part of an outer surface **133** of the core component **130**. Thus, the at least one of the plurality of decorative elements **132** and the body **131** collectively forms the outer surface **133** of the core component **130**. The at least one of the plurality of decorative elements **13** may thus be located at an interface between the shell component **120** and the core component **130**. As a result, the at least one of the plurality of decorative elements **132** is exposed at the outer surface **133** of the core component **130**. Specifically, if the shell component **120** were somehow removed, the decorative element(s) **132** located at the outer surface **133** of the core component **130** would be completely exposed rather than being embedded within the material of the body **132** of the core component **130**.

Although described herein as having at least one of the plurality of decorative elements **132** forming a part of the outer surface **133** of the core component **130**, in the exemplified embodiment there are many of the decorative elements **132** so located at the outer surface **133** of the core component **130**. Locating at least one, and preferably several or many, of the plurality of decorative elements **132** at the outer surface **133** of the core component **130** ensures that the decorative elements **132** are visible, particularly in instances where the core component **130** is opaque and decorative

elements **132** embedded within the core component **130** may be difficult if not impossible to see. In this manner, the visual effects described herein can be achieved even when the core component **130** is opaque.

In certain embodiments the body **131** comprises a first color and at least one of the particles of the plurality of decorative elements **132** comprises a second color that is different than the first color. The first and second colors can be different even if they are different shades of the same color (i.e., sky blue and steel blue are different shades of blue; crimson and ruby are different shades of red, etc.). Furthermore, in some embodiments the plurality of decorative elements **132** may all be the same color. In other embodiments several of the plurality of decorative elements **132** may be different colors relative to each other. Furthermore, in some embodiments the body **131** may be colored and one or more of the decorative elements **132** may be transparent. In certain embodiments it is merely desirable that the plurality of decorative elements **132** are visible through the shell component **120** and through/within the body **131** of the core component **130**. Thus, the various colors and transparencies of the shell component **120**, body **131**, and decorative elements **132** can be selected to achieve this aesthetic purpose.

In still other embodiments the elastomeric overlay **160** may have a color that is the same as one of the color of the body **131** of the core component **130** or the color of the decorative elements **132** dispersed or embedded within the body **131** of the core component **130**. Thus, the elastomeric overlay **160** and the body **131** may be a first color and the decorative elements **132** may be a second color. Alternatively, the elastomeric overlay **160** and the decorative elements **132** may be a first color and the body **131** may be a second color. In still other embodiments each of the elastomeric overlay **160**, the body **131** and the decorative elements **132** may be a different color or the same color. Thus, many permutations and variations are possible to create a desired aesthetic effect.

Referring briefly to FIG. **4**B, an alternative embodiment is depicted in which some of the plurality of decorative elements **132***a* are embedded within the body **131** and/or form a portion of the outer surface **133** of the body **131** and others of the plurality of decorative elements **132***b* protrude from the outer surface **133** of the body **131**. This can create a visibly appealing three-dimensional appearance of the decorative elements **132** as they are viewed through the shell component **120**. In either embodiment (FIG. **4**A and/or FIG. **4**B), the decorative elements **132** may collectively take on a specific shape, such as the shape of a television character, the shape of a logo, the shape of a company or individual's name, or the like. Thus, the decorative elements **132** may be used to convey a message to a consumer or take on an appearance that may be desirable for children. In some embodiments, the decorative elements **132***a* embedded within the body **131** and the decorative elements **132***b* protruding from the outer surface **133** of the body **131** may together form the shape of a character, logo, name, or the like. In other embodiments, the decorative elements **132** may be randomly dispersed within the body **131**.

Referring to FIGS. **5-7** concurrently, another embodiment of an oral care implement **200** will be described. The oral care implement **200** is similar to the oral care implement **100** in many respects, and thus features of the oral care implement **200** that are similar to or the same as features of the oral care implement **100** will not be described in detail herein, it being understood that the description of the similar feature in the oral care implement **100** applies. Some of the features that are not described will be numbered similarly to the similar feature in the oral care implement **100** except that the 200-series of numbers will be used. Thus, the similar features among the oral care implements **100**, **200** should be readily apparent based on the numbering used in the drawings.

The oral care implement **200** comprises a base structure **210** having a handle portion **211** and a head portion **212**. Furthermore, the base structure **210** comprises a shell component **220** and a core component **230**, the shell component **220** substantially surrounding the core component **230**. The shell component **220** and the core component **230** are similar in structure, hardness, and material to the same features described above in the oral care implement **100** and thus in the interest of brevity these details will be omitted with regard to the oral care implement **200**, it being understood that the description above is applicable.

The main difference between the oral care implement **200** and the oral care implement **100** is that the core component **230** of the oral care implement **200** is substantially transparent rather than being depicted in grayscale as with the oral care implement **100**. Thus, in the oral care implement **200** the shell component **220** is translucent or transparent and the core component **230** is substantially translucent or transparent. In one embodiment, the shell and core components **220**, **230** may both be completely transparent so that all light passes through the shell and core components **220**, **230** without being scattered. In other embodiments one of the shell and core components **220**, **230** may be translucent and not transparent while the other is transparent or both of the shell and core components **220**, **230** may be translucent and not transparent and may be tinted with the same, similar, or different colors to achieve a desired aesthetic effect. Although the core component **230** is identifiable in the drawings due to the line outlining the boundary of the core component **230**, in practice the core component **230** may blend in completely with the shell component **220** so that a consumer can not tell that there are two different components forming the base structure **210** of the oral care implement **200**. This is particularly true when both the shell and core components **220**, **230** are transparent or otherwise formed of a material having an identical color.

In this embodiment, the core component **230** comprises a body **231** and a plurality of decorative elements **232** dispersed or embedded within the body **231**. Thus, to a user who can not visually see the distinction between the shell component **220** and the core component **230**, it appears that the decorative elements **232** are freely suspended within the base structure **210** but are limited to some parts of the base structure **210** rather than being dispersed throughout the entirety of the base structure **210**. Specifically, the decorative elements **232** are located within the body **131** of the core component **230** and not also within the shell component **220**, so the decorative elements **232** are only visible in parts of the base structure **210** that include the core component **230**. Thus, the decorative elements **232** appear to be freely suspended within some portions of the handle portion **211** of the base structure **210** but not within other portions of the handle portion **211** or the head portion **212** of the base structure **210**.

Referring now to FIGS. **8-10** concurrently, another embodiment of an oral care implement **300** will be described. The oral care implement **300** is similar to the oral care implement **100** in many respects, and thus features of the oral care implement **300** that are similar to or the same as features of the oral care implement **100** will not be described in detail herein it being understood that the

description of the similar feature in the oral care implement **100** is applicable. Some of the features that are not described will be numbered similarly to the similar feature in the oral care implement **100** except that the 300-series of numbers will be used. Thus, the similar features among the oral care implements **100**, **300** should be readily apparent based on the numbering used in the drawings.

The oral care implement **300** comprises a base structure **310** having a handle portion **311** and a head portion **312**. Furthermore, the base structure **310** comprises a shell component **320** and a core component **330**. The details of the shell component **320** are the same as that described above with regard to the shell component **120**. Thus, the shell component **320** may be transparent or translucent and formed of a rigid material. The shell component **320** substantially surrounds and encapsulates the core component **330** such that no portion of the core component **330** extends to an outer surface **313** of the base structure **310**. Rather, the entire outer surface **313** of the base structure **310** is formed by the shell component **320**. The shell component **320**, and not the core component **330**, forms the head portion **312** of the base structure **310**.

The core component **330** comprises a body **331** and a plurality of decorative elements **332**. The body **331** is formed of a rigid material and may be transparent, translucent, opaque, or the like as described herein above. The main difference between the oral care implement **300** and the previously described oral care implements **100**, **200** is that the decorative elements **332** in this embodiment are not particles, but rather they are gas bubbles or void spaces within the body **331**. Thus, the body **331** may be an opaque material and the decorative elements **332** may be gas bubbles or void spaces within the opaque body **331** so that the gas bubbles or void spaces are readily visible to a consumer or user of the oral care implement **300**. Such gas bubbles or void spaces are formed into the core component **330** by incorporating a foaming agent into the rigid material that forms the body **331** before injecting the rigid material of the body **331** into a mold cavity during an injection molding process. Examples of foaming agents that may be used in the practice of the present invention include, without limitation, Exocerol AB40E™, Hydrocerol™, or the like. When a foaming agent such as those noted herein above is included into the rigid material of the body **331**, as the rigid material is heated to an elevated temperature (such as the temperatures reached during injection molding), the foaming agent generates a gas. Thus, as the rigid material with the foaming agent incorporated therein is injected into a mold cavity of a mold, the foaming agent will form gas bubbles or void spaces within the rigid material of the body **331**. These gas bubbles or void spaces are visible to a user through the shell component **320**, thereby forming the decorative elements **332** of the body component **330**.

Incorporating a foaming agent into the material of the body **331** can create a desirable aesthetic effect by having the body **331** formed with gas bubbles/void spaces therein that are visible through the shell component **320**. The gas bubbles/void spaces will be limited in location to regions of the base structure **310** that include the core component **330**, which achieves a unique affect to a viewer or consumer. When the decorative elements **332** are gas bubbles/void spaces, it may be desirable for the body **131** to be colored, opaque, translucent, or simply not transparent so that the gas bubbles/void spaces are readily visible within the body **131**. Of course, the invention is not to be so limited in all embodiments and in certain other embodiments the body **131** may be transparent and the decorative elements **332** may be gas bubbles/void spaces.

Turning now to FIG. **11**, a method of forming the base structure **110** of the oral care implement **100** of FIGS. **1-4A** using a first mold **500** will be described. The base structure **110** of the oral care implement **100** may be formed in a single mold (i.e., the first mold **500**) using a sandwich molding process as described herein. Alternatively, the base structure **110** may be formed by overmolding a first solid shot with a separately molded second shot, but such process would require two mold cavities instead of one.

In the exemplified embodiment, the first mold **500** comprises a first mold half **501** and a second mold half **502**, although the invention is not to be so limited in all embodiments and more than two portions may make up the first mold **500** in other embodiments. The first and second mold halves **501**, **502** collectively define a first mold cavity **503** within which the base structure **110** of the oral care implement **100** is formed as described herein below. The first mold cavity **503** has a size and shape that corresponds with a size and shape of the base structure **110** of the oral care implement **100** that is formed in the first mold cavity **503** of the first mold **500**. In the exemplified embodiment, there is a first injection sub-system **504** and a second injection sub-system **505** for injecting different materials into the first mold cavity **503** in separate processing steps either simultaneously or sequentially. The first injection sub-system **505** includes a first reservoir **516** containing a first material to be injected and a first conduit **517** that forms a passageway from the first reservoir **516** into the first mold cavity **503** so that the first material can be injected into the first mold cavity **503** to form the shell component **120** of the base structure **110** of the oral care implement. The second injection sub-system **505** includes a second reservoir **518** containing a second material to be injected and a second conduit **519** that forms a passageway from the second reservoir **518** to the first mold cavity **503** so that the second material can be injected into the first mold cavity **503** to form the core component **130** of the base structure **110** of the oral care implement **100**.

Referring to FIG. **12**, the first mold **500** is illustrated with a first material **506** being injected into the first mold cavity **503** via the first injection sub-system **504**. In this embodiment the first material **506** is a rigid plastic material in molten form due to it being injected at an elevated temperature. In certain embodiments the first material **506** is a substantially translucent rigid plastic material. The first material **506** forms the shell component **120** of the base structure **110** of the oral care implement **100**. Thus, the first material **506** is injected into the first mold cavity **503** in a desired volume.

Referring to FIG. **13**, after a desired volume of the first material **506** is injected into the first mold cavity **503**, the injection of the first material **506** is terminated and a second material **507** is injected into the first mold cavity **503** via the second injection sub-system **505**. The second material **507** will form the body **131** of the core component **130** of the base structure **110**. Specifically, the second material **507** is injected into the first material **506** in the first mold cavity **503**. As the second material **507** is injected into the first material **506**, the second material **507** displaces the first material **506** within the first mold cavity **503** and the second material **507** becomes surrounded or encased by the first material **506**. The first and second materials **506**, **507** together form the base structure **110** of the oral care implement **100**. More specifically, the first material **506** forms the shell component **120** of the base structure **110** and the

second material **507** forms the core component **130** of the base structure, the shell component **120** surrounding the core component **130** as described above.

Furthermore, as can be seen in FIG. **13**, the plurality of decorative elements **132** are dispersed within the second material **507** as the second material **507** is injected into the first mold cavity **503**. Thus, after the first and second materials **506**, **507** are injected into the first mold cavity **503** and cooled to harden, the decorative elements **132** are embedded within the body **131** of the core component **130** formed by the second material **507**. Because the first material **506** is substantially translucent, the plurality of decorative elements **132** are visible through the first material **506** of the shell component **120** in the completed base structure **110**. As can also be seen, the first material **506** forms the shell component **120** of the base structure **110** and the head portion **112** of the base structure **110**.

In the embodiment exemplified in FIGS. **11-13**, the plurality of decorative elements **132** are particles as described herein above. Furthermore, the second material **507** may be transparent, translucent, or opaque to create a desired aesthetic effect. Although FIGS. **11-13** are described herein wherein the decorative elements **132** are particles that are dispersed within the second material **506** before the second material **506** is injected into the first mold cavity **503**, the invention is not to be so limited in all embodiments. In certain other embodiments, the decorative elements **132** may be gas bubbles or void spaces formed within the second material **507** during injection of the second material **507** into the first mold cavity **503**. Specifically, in such embodiments the second material **507** may include a foaming agent such that during injection molding the second material **507** is heated to a sufficient temperature so that the foaming agent generates gas that forms the gas bubbles/void spaces within the second material **507** as described above. Thus, the decorative elements **132** may be particles dispersed within the second material **507** prior to injecting the second material **507** into the first mold cavity **503** or gas bubbles that are formed during the injection of the second material **507** into the first mold cavity **503**.

After the first and second materials **506**, **507** are injected into the first mold **500** and allowed to cool and harden, the base structure **110** is completely formed. At this stage, the base structure **110** can be removed from the first mold **500** and tooth cleaning elements can be attached to the head portion **112** of the base structure **110** to form a finished toothbrush product. Alternatively, the base structure **110** may be used as a hairbrush, razor, or the like as discussed herein above.

In certain embodiments, the base structure **110** may be removed from the first mold cavity **503** of the first mold **500** and placed within a second mold cavity **603** of a second mold **600** wherein a third material may be injected onto the base structure **110** to form a grip for the oral care implement **100**. Referring to FIG. **14**, the base structure **110** is positioned within the second mold cavity **603** of the second mold **600**. While the base structure **110** is so positioned, a third material **606** is injected into the second mold cavity **603** to fill in the spaces of the second mold cavity **603** that are not filled by the base structure **110**. In certain embodiments, the third material **606** may be a thermoplastic elastomer or other elastomeric material to form the elastomeric overlay **160** for functioning as a grip on the base structure **110** as noted herein above. FIG. **15** illustrates the oral care implement **100** including the base structure **110** comprising the first material **506** that forms the shell component **120** and the second material **507** that forms the core component **130** and also including the third material **606** that forms the elastomeric overlay **160** coupled to the base structure **110**. At this point in the manufacturing process, the oral care implement **100** can be removed from the second mold **600** and finalized for sale by adding tooth cleaning elements, hair brush bristles, or the like to the oral care implement **100** before packaging and transport to retail locations.

While the invention has been described with respect to specific examples including presently preferred modes of carrying out the invention, those skilled in the art will appreciate that there are numerous variations and permutations of the above described systems and techniques. It is to be understood that other embodiments may be utilized and structural and functional modifications may be made without departing from the scope of the present invention. Thus, the spirit and scope of the invention should be construed broadly as set forth in the appended claims.

What is claimed is:

1. An implement comprising:

a base structure comprising a core component and a shell component, the shell component encapsulating the core component and forming an outer surface of the base structure;

the shell component formed of a substantially translucent first material;

the core component comprising a body formed of a rigid material and a plurality of decorative elements embedded within the rigid material, at least one of the plurality of decorative elements forming a portion of an outer surface of the core component, the at least one of the plurality of decorative elements of the core component being visible through the substantially translucent first material of the shell component; and

a grip component formed of a thermoplastic elastomer overmolded to the outer surface of the base structure;

wherein the plurality of decorative elements comprises discrete particles; and

wherein at least one of the plurality of decorative elements protrudes from an outer surface of the body of the core component; and

wherein the core component, the plurality of decorative elements, and the grip component are the same color or different shades of the same color.

2. The implement according to claim **1** wherein the body is opaque.

3. The implement according to claim **1** wherein the body is transparent or translucent and the plurality of decorative elements are opaque.

4. The implement according to claim **1** wherein the shell component is formed of a rigid material.

5. The implement according to claim **1** wherein the at least one of the plurality of decorative elements is located at an interface between the shell component and the core component.

6. The implement according to claim **1** wherein the at least one of the plurality of decorative elements is exposed at the outer surface of the core component.

7. The implement according to claim **1**, wherein the base structure is a handle of a toothbrush.

8. An implement comprising:

a base structure comprising a core component and a shell component surrounding the core component;

the shell component and a body of the core component being formed of a substantially transparent first rigid material; and

the core component comprising a plurality of decorative elements embedded within and dispersed throughout

the body and visible through the shell component and the body of the core component, at least one of the plurality of decorative elements forming a portion of an outer surface of the core component, the plurality of decorative elements comprising discrete particles; and

wherein the shell component is free of any decorative elements; and

wherein the base structure is a handle of a toothbrush.

9. The implement according to claim **8** wherein the shell component of the base structure also forms a head of the toothbrush.

10. The implement according to claim **9** further comprising a plurality of tooth cleaning elements extending from the head of the toothbrush.

* * * * *