June 1, 1965 C. H. ARNOLD 3,186,659

DEVICE FOR COILING AND STORING WIRE ROPE AND THE LIKE

Filed May 27, 1963 2 Sheets-Sheet 1

FIG_1

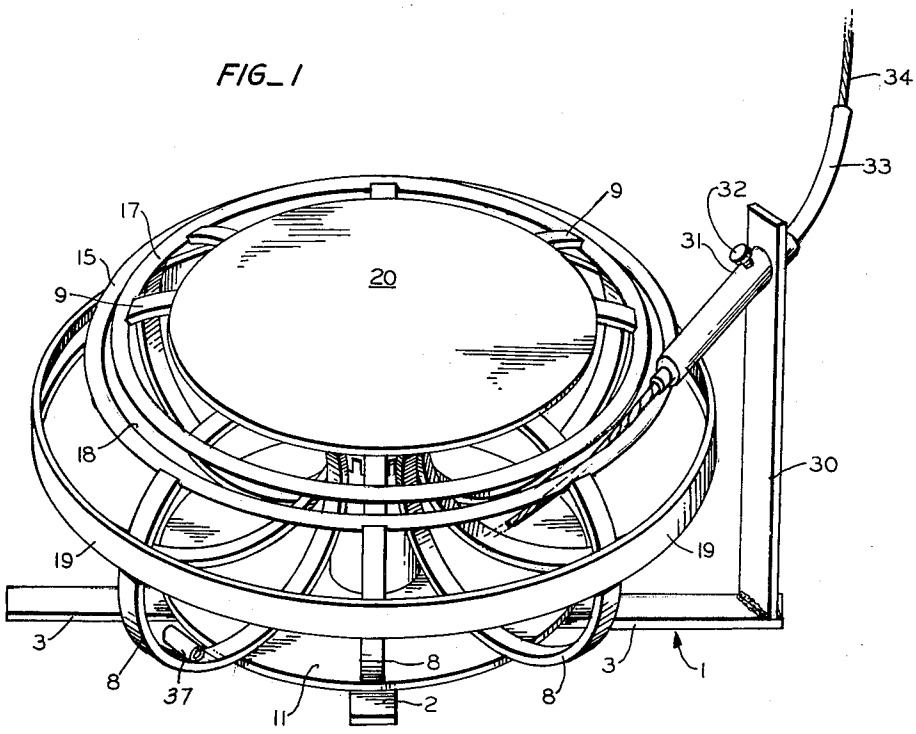

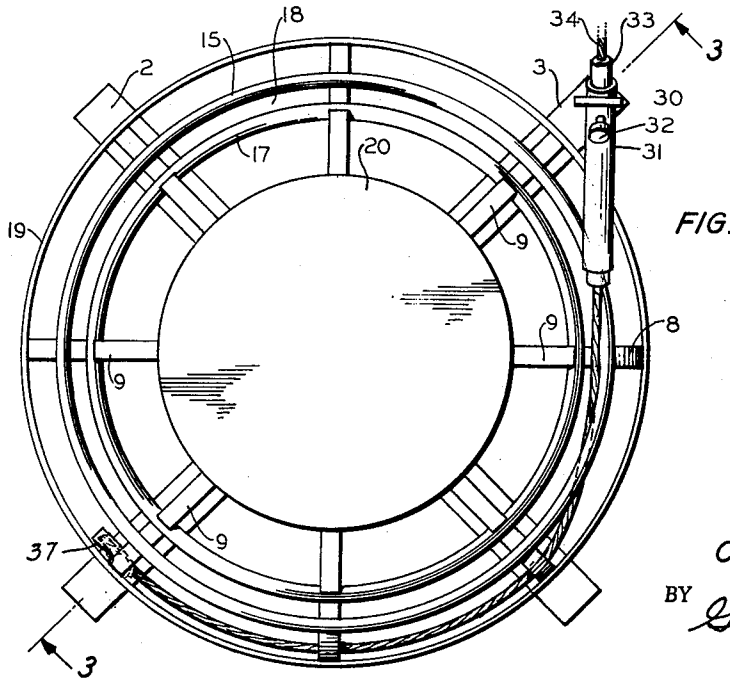

FIG_2

INVENTOR.
CARTER H. ARNOLD
BY Gordon Wood.
ATTORNEY

June 1, 1965 C. H. ARNOLD 3,186,659

DEVICE FOR COILING AND STORING WIRE ROPE AND THE LIKE

Filed May 27, 1963 2 Sheets-Sheet 2

FIG_3

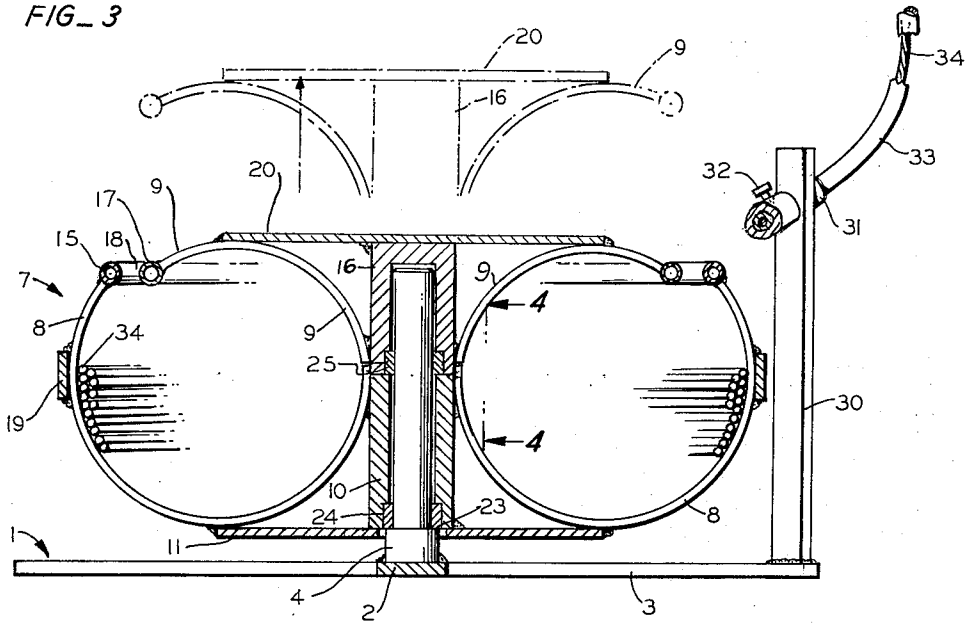

FIG_4

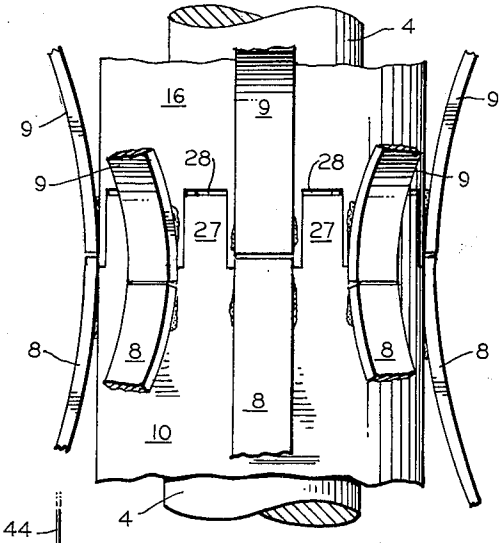

FIG_5

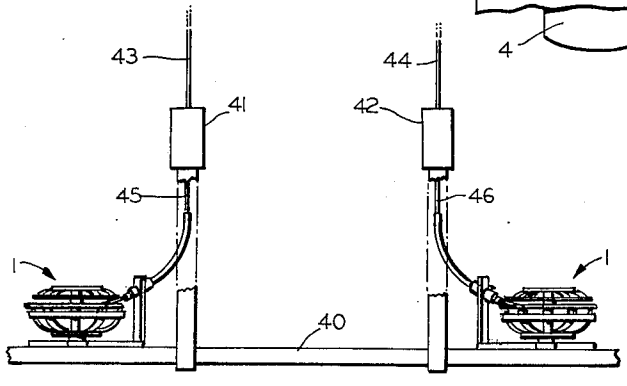

INVENTOR.
CARTER H. ARNOLD
BY Gordon Wood
ATTORNEY

United States Patent Office

3,186,659
Patented June 1, 1965

3,186,659

DEVICE FOR COILING AND STORING WIRE ROPE AND THE LIKE

Carter H. Arnold, Redwood City, Calif.
(317 Rocky Point Road, Palos Verdes Estates, Calif.)

Filed May 27, 1963, Ser. No. 283,465
4 Claims. (Cl. 242—129)

This invention relates to a device for coiling and storing an elongated flexible element such as wire rope. Although the invention will be described in detail with reference to wire rope, it will be understood that it is useable with various other elongated materials which, like wire rope, have some resistance to axial compression.

Heretofore a serious problem has existed in coiling and storing materials such as hose, flexible tubing, wire rope and the like. The customary practice has been to wrap the material on a drum, but various disadvantages exist in this procedure. One disadvantage is that the material does not tend to lie naturally on the drum with the result that the material is strained and, when removed from the drum, tends to have residual coils which may cause kinking. Another disadvantage is that it is generally necessary to provide some motor means for wrapping the material on the drum even though it may be removed by pulling on the material as is frequently done on the lines for oxyacetylene welding, garden hoses, air hoses, wire rope and the like.

The main object of the present invention is the provision of a device in which wire rope and like material may be stored and which has none of the disadvantages attending the use of reel type storage devices.

Another object of the invention is the provision of a novel reeling and storing device for wire rope and the like which is readily operated without requiring any outside power regardless of whether the rope is being stored or removed.

Still another object of the invention is the provision of a wire rope receiving receptacle for hoists of the type in which the end of the rope is not secured to the drum, but wherein the rope runs on and off the drum so that there is always the same number of coils in engagement with the drum. In hoists of this type the present invention provides means for avoiding the complications that arise in disposing of the slack end of the rope while the hoist is in operation.

Other objects and advantages will be apparent from the following specification and from the drawings.

FIG. 1 is a perspective of a preferred form of the invention.

FIG. 2 is a top plan view of the device of FIG. 1.

FIG. 3 is a vertical cross-section taken in a plane indicated by lines 3—3 of FIG. 2.

FIG. 4 is an enlarged fragmentary side elevation of the device showing the central bearing post.

FIG. 5 is a side elevation of a swing stage showing the use of the invention thereon with hoists of the type that climb the supporting rope.

In detail, and first with reference to FIG. 1 the preferred form of the invention comprises a base generally designated 1 which, by way of example, is shown in the drawings as a pair of intersecting flat bars 2, 3 which may be welded together. Extending upwardly from the base 1 at the intersection of the flat bars 2, 3 is a shaft 4 (FIG. 3) the function of which is to rotatably support the housing now to be described.

The housing generally designated 7 is generally toroidal in shape and is divided into two major portions. The lower portion comprises a plurality of flat bars 8 which, as best seen in FIG. 3, are bent to the arc of a circle extending for about 200° thus forming an outer generally circular wall. These flat bars 8 are secured as by welding at their inner ends to the lower portion 10 of a central post which is rotatably supported on shaft 4. Said lower portion 10 of the central post is also secured to a circular plate 11 which in turn is secured at its outer periphery as by welding to the lower portions of flat bars 8. Said lower portions of flat bars 8 thus form a bottom wall which cooperate with said outer generally circular wall to define an annular receptacle for coils.

The upper ends of the flat bars 8 are all connected together by means of a circular loop of pipe 15. The generally toroidal shape is completed by flat bars 9 which are curved to a circular shape extending for about 150° and secured at their inner ends as by welding to an upper post section 16 which is also rotatable on shaft 4. The outer ends of flat bars 9 are provided with a closed loop of pipe 17 to which they are welded so that pipes 17 and 15 are spaced apart to define an annular slot 18 therebetween.

It will be noted in FIG. 3 that the inner pipe 17 is horizontally offset from the outer pipe 15 so that the radius of curvature of the flat bars 9 is slightly less than the radius of curvature of the flat bars 8. If pipe 17 were spaced upwardly as well as horizontally from pipe 15 so that a perfect circle were defined by flat bars 8, 9 the device would operate satisfactorily. However, the particular structure shown is preferred in that there is less likelihood for the rope or other element to be stored to accidentally move out of the housing. This will be more apparent later on.

Secured to the upper end of the upper portion 16 of the central post is another circular plate 20 which is welded at its periphery to the flat bars 9. An outer peripheral flat bar 19 serves to tie the flat bars 8 together.

It will be apparent that a smooth annular space is defined between the flat bars 8 and 9 adapted to receive the coils of rope therein.

As seen in FIGS. 3, 4 the upper portion of the housing which includes the upper portion 16 of the central post, the circular plate 20, the flat bars 9 and the pipe 17 are all removable as a unit from the remainder of the housing by pulling said unit upwardly in a direction axially of the shaft 4 as indicated in dotted lines in FIG. 3.

In order to space the housing slightly above the base 1, the shaft 4 is provided with a shoulder 23 on which is supported a bearing sleeve 24 fixedly secured to the lower portion 10 of the central post.

The upper portion 16 of the central post is similarly provided with a bearing sleeve 25 for rotatably supporting the upper portion of the housing.

In order to permit the upper and lower portions of the housing to work together as a unit the periphery of the lower portion is provided with axailly extending extensions 27 at its upper end which are received in complementarily formed downwardly opening slots 28 in the upper portion 16 of the central post. These extensions and slots may be interposed between adjacent flat bars 8, 9 which, as shown in the drawings by way of example, are spaced apart 45°. It will be understood that the exact construction of the housing is not critical and the same may be made from expanded metal, screen, light sheet metal or any other means. However, if the device is to be portable in nature, the lightweight open construction is preferred.

It will be noted from FIG. 4 that unwelded terminal portions of flat bars 8, 9 extend past the juncture between the lower and upper portions 10, 16 of the central post. The purpose of this structure is to avoid the formation of a continuous circumferentially extending groove in which the rope might be caught while it is being removed.

Extending upwardly from one end of one of the flat bars 2, 3 which form the base 1 is a standard 30 (FIG. 1)

which is apertured adjacent its upper end to receive therethrough an integral sleeve **31** which may be provided with a tightening screw **32** as best seen in FIG. 3. In use, it is preferable to provide a length of flexible conduit **33** within which the wire rope **34** is slidably supported. In such a case the conduit may be slipped through sleeve **31** and tightened in the desired position by means of screw **32**.

As best seen in FIG. 2 the orientation of the sleeve **31** is important in that it provides a guide for the line of action along which the wire rope extends as it is fed into and discharged from the housing **7**. Referring to FIGS. 1, 2 and 3 it will be noted that the direction of the wire rope **34** is slantingly downwardly and inwardly of the toroidal space defined by the housing so that, generally, the line of action of the rope is in oblique intersecting relation to the annular storage space.

It will be apparent that as the rope **34** is fed toward the housing it will tend to lie against the outermost side of the wide portion of the housing and will tend to turn the housing in one direction. As long as the rope is fed inwardly of the housing it will continue to rotate the latter and at the same time cause the rope to lie in coils which will build up in a direction toward the center of the housing. Similarly when the rope is pulled outwardly of the housing it will cause the housing to rotate in the opposite direction and the rope will be uncoiled from a naturally coiled condition thereby obviating any tendency for the rope to kink.

It should be noted that the sleeve **31** extends to a point very closely adjacent the annular slot **18**. This is especially important when a very slender element such as small diameter wire rope is being employed in order not to allow sagging or other deflection of the rope. In other words it is important to maintain the line of action of the rope after the best direction of such line of action has been determined.

The end of the rope may be received within one end of a short length of pipe **37** which has been plugged at its opposite end. As best seen in FIGS. 1, 2 such length of pipe provides an effective socket that may be welded to one of the lower flat bars **8** of the housing. When all of the rope is removed from the housing such socket permits the rope to be freed automatically.

An important feature of the present invention is the fact that it takes advantage of the resisance of the rope to a moderate compressive force. Obviously this device would not work on an extremely flexible material such as string, but it operates satisfactorily on most flexible materials such as hose, wire rope, steel strips and like material.

The invention lends itself particularly to use with a rig such as shown in FIG. 5 wherein a swing stage **40** is supported by means of two hoists indicated schematically at **41, 42** from a pair of wire ropes **43, 44** respectively. The hoists **41, 42** are of the type shown in United States Patent No. 3,063,653 and are of the type that climb the ropes **43, 44** as distinguished from reeling the ropes on a rotatable drum. In such a case the slack ends **45, 45** which extend downwardly from the hoists **41, 42**, and which normally present a problem in that they are hanging free down to the ground and perhaps interfering wtih passage of traffic, are disposed of as seen in FIG. 5 by means of two of the coiling devices **1** supported at opposite ends of the swing stage **40**. The particular position of the coiling devices in the apparatus of the type shown in FIG. 5 is not important and they may be on out-riggers formed on the platform or underneath the platform depending on the particular application to which the hoists are put.

It will be seen that the invention provides an extremely simple and efficient method of coiling and storing wire rope and the like and at the same time maintains the condition of the rope against any hazards including kinking.

As indicated in FIG. 3 the upper portion of the housing

may be removed so that the plurality of coils which are stored in the housing may be removed as one bundle or a new coil may be inserted for subsequent attachment to a hoist or to whatever apparatus is involved in the particular application.

It will be understood that the flat bars **8** form a circular wall providing a radially inwardly directed wall defining an annular storage space. The fact that the wall is interrupted does not affect its function, and it is apparent, as noted above, that the housing may be formed of expanded metal, screen, sheet metal or any other material that may be shaped to define the storage space. The pipes **15, 17** function, of course, as margins defining the slot **18** regardless of the material employed for the housing.

It should also be understood that the above very specific description of a preferred form of the invention is not to be taken as restrictive of the invention since it will be apparent that various minor modifications in design may be resorted to without departing from the scope of the following claims.

I claim:

1. A device for coiling and storing an elongated flexible element comprising:

a housing,

a base on which said housing is supported,

means mounting said housing for rotation about a central axis relative to said base,

means on said housing forming a generally circular wall directed radially inwardly relative to said axis and defining an annular space for coils of said element,

a guide member fixedly mounted relative to said base and adapted to restrain said element at a portion of its length to movement along a line intersecting said annular space,

whereby movement of said element toward said housing automatically rotates said housing in one direction and forms coils in said space, and movement of said element away from said housing automatically rotates said housing in the opposite direction and unwinds the coils from said space,

said housing including a central portion extending along said axis and inwardly of said annular space,

and an extension on said central portion extending radially outwardly toward said wall and terminating at its outer end in a margin spaced from the adjacent margin of said wall to define an annular slot on said housing for receiving said element therethrough.

2. In combination with a length of wire rope or a like flexible element having sufficient stiffness to withstand moderate axial compression:

a housing,

a base on which said housing is supported,

means mounting said housing for rotation about a central axis relative to said base,

said housing being formed with a sidewall concentric with said axis and defining an annular space,

a central post positioned axially of said housing and a shaft on said base rotatably supporting said post,

a guide member fixedly mounted relative to said base and adapted to restrain said wire rope to movement along a line interesecting said annular space,

said sidewall being generally toroidal in shape and secured to said post,

said post comprising upper and lower portions secured respectively to upper and lower portions of said sidewall.

3. A device adapted to be used for coiling and uncoiling wire rope or a like flexible element having sufficient stiffness to withstand moderate axial compression comprising:

a receptacle including an outer circular sidewall and a bottom wall,

a base on which said receptacle is mounted,

means mounting said receptacle for rotation about a central vertical axis relative to said base,

means extending radially outwardly of said central

axis for restraining upward movement of coils of such rope out of said receptacle,

an elongated rigid guide adapted to receive said rope longitudinally therethrough and fixed relative to said base,

said guide extending along a line of action intersecting the annular space between said circular sidewall and said axis for restraining said rope to movement along said line of action,

whereby movement of such rope toward said receptacle automatically rotates the latter in one direction and forms coils in said annular space against said outer sidewall, and movement of such rope away from said ceptacle rotates said receptacle in the opposite direction and unwinds the coils from said space.

4. A device according to claim 3 wherein said receptacle includes an inner circular sidewall integral with said bottom wall and adapted to be engaged by such rope when the latter is moved away from said receptacle.

References Cited by the Examiner

UNITED STATES PATENTS

1,147,680 7/15 Crawford ---------- 242—129

FOREIGN PATENTS

336,225 3/04 France.

MERVIN STEIN, *Primary Examiner.*