A. GREENSTEIN.

DUPLICATE SALES BOOK.

APPLICATION FILED JULY 19, 1917.

1,261,514. Patented Apr. 2, 1918.

FIG. 1.

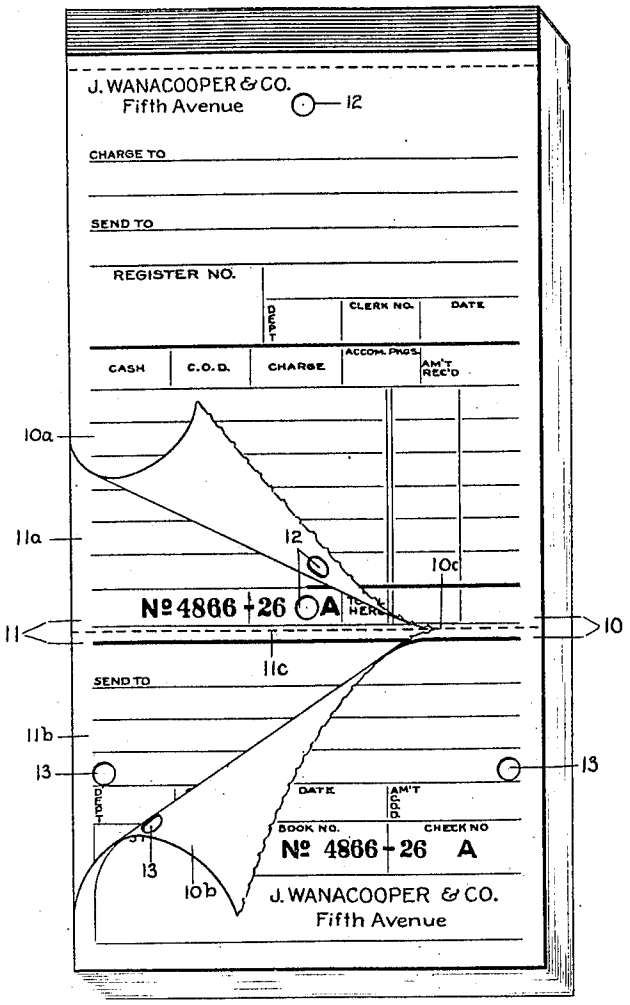

FIG. 2.

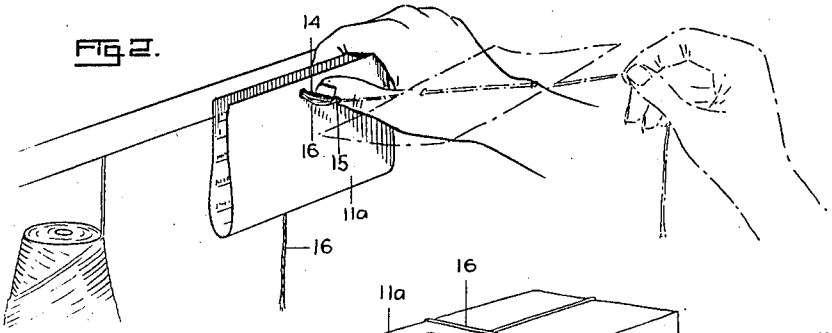

FIG. 3.

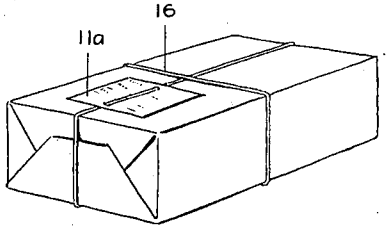

WITNESSES

Chas. A. Gilmore

Geo. P. Beeler.

INVENTOR
A. Greenstein

BY Munn & Co.

ATTORNEYS

UNITED STATES PATENT OFFICE.

ABRAHAM GREENSTEIN, OF NEW YORK, N. Y.

DUPLICATE SALES-BOOK.

1,261,514. Specification of Letters Patent. Patented Apr. 2, 1918.

Application filed July 19, 1917. Serial No. 181,504.

To all whom it may concern:

Be it known that I, ABRAHAM GREENSTEIN, a citizen of the United States, and resident of the city of New York, borough of Manhattan, in the county and State of New York, have invented a new and Improved Duplicate Sales-Book, of which the following is a full, clear, and exact description.

This invention relates to duplicate sales checks or tags of the character covered by Letters Patent of the United States issued to me on the 26th day of September, 1916, No. 1,199,692, and has particular reference to certain details of construction which adapt the sales book or the several tags for easier and more rapid manipulation and whereby the cost of production of the books is greatly reduced. For a practical embodiment of the invention and for illustrations of its adaptability reference is had to the accompanying drawings in which similar reference characters are applied to similar parts and of which—

Figure 1 is a perspective view of the sales book embodying my new improvements.

Fig. 2 is a diagram indicating in full lines the manner of threading the wrapping cord through the holes in opposite sides of the tag, and in dot and dash lines the relation of the cord to the tag after being so threaded; and

Fig. 3 is a view of the package to which my improved tag is applied during the wrapping operation.

Referring now more particularly to Fig. 1 which shows the improvement as a whole and which in a general way is somewhat similar to that described in the patent above referred to, I show a book comprising a collection of pairs of leaves, the first or uppermost leaf of each pair being indicated at 10 and the second leaf of each pair being indicated at 11. These leaves carry similar marks of identification according to the course the package is to take, and as in the previous case the first leaf is preferably of a thin and cheap quality of paper compared with the second leaf. Each leaf is divided into two parts, one longer and the other shorter, but with the longer part 10^a of the first leaf being exactly equal in size to the part 11^a of the second leaf. Also the thin part 10^b of the first leaf exactly coincides with the heavy part 11^b directly beneath it. The two parts of each leaf are connected as heretofore by a weakened line indicated at 10^c and 11^c respectively so that they may be separated after the sales person has made the proper inscription thereon writing directly upon the first sheet and making a carbon impression in the usual manner upon the second sheet.

The longer portions of the leaves are provided with holes 12 at the opposite ends and preferably at the centers of such ends. Likewise the shorter portions of the leaves are provided with holes 13 at or near the centers of their shorter ends, all the holes at the same end or portion of each leaf part being in precise registry with one another throughout the book. The purpose of the holes 12 and 13 in the heavy tough tag parts of the second leaf is to provide for the wrapping of the tag that is to accompany the package directly upon the package while the package is being wrapped. By passing the cord through the two opposite holes in the tag so that the main portion of the cord adjacent to the tag lies flat upon the outside of the tag it is insured that the tag will be securely applied so as not to become lost or torn, by a single simple wrapping operation. Since the cord lies flat across nearly all of the longer dimension of the tag it is unnecessary to entail the expense of the reinforcement of the holes in the manufacture of the book and thus by this improvement and method of wrapping the saving of thousands of dollars annually in the item of sales books alone is being effected. The saving, however, in the price of sales books is of relatively small consequence compared with the saving of time and labor in the wrapping and delivery of the goods in large department stores. The provision of the duplicate holes at opposite ends of the tag to be applied to the package makes it feasible and practical for the wrapping cord to be threaded or projected readily therethrough by means of a stationary needle projecting from beneath a shelf or desk, as indicated in Fig. 2, through which the end of the wrapping cord is supported. The operator simply doubles the tag and passes the two registering holes over the needle 14 having the eye 15 through which the loose end 16 of the cord passes. This operation is of the simplest character and requires practically no time. When the tag is thus slipped over the needle as shown in full lines, the operator or wrapper grasps

the free end of the cord between his thumb and finger and draws it directly toward him, the tag following the cord. The wrapping of the package is then completed in the usual manner with the result that the tag is securely applied thereto simply by the wrapping operation. A tag having only one hole for tying purposes must ordinarily be reinforced or made of a quality of paper that is practically prohibitive at the present time. Furthermore to tie a tag to a package, the tag having only one hole as heretofore, the tying of the tag must ordinarily be done through a separate action or operation subsequent to the wrapping of the package. For these reasons it must be appreciated that the wrapping and delivery of goods may be effected not only much more rapidly by this new system, but is much safer for all parties concerned than through previous systems.

While the thin slips 10^a and 10^b are intended for local or office use, not being for attachment to the packages, it is of great importance that the holes be formed therein as well as in the tag portions 11^a and 11^b for this reason. The sales person writes the inscription upon the first slips 10^a and 10^b, a sheet of carbon being placed between the two leaves as usual. If now the thin sheets were not perforated in registry with the tag portions the tendency or danger would be that the writer would write directly over that portion of a tag having a hole. This operation would cause at least two undesirable results, first, the pencil would probably puncture the paper, interfering with the writing, and, secondly, if an important part of the inscription such, for example, as a figure of an address were to be written in this manner upon the thin sheet the record made upon the delivery tag would be defective in not carrying that particular figure and hence the delivery would fail for want of correct address, whereas with the sheets both perforated in alinement the writer cannot write upon the first sheet any figure or letter that will not be reproduced upon the second sheet.

I claim:

1. The herein described foldable delivery tag for packages having a pair of cord holes formed in its opposite ends, the centers of the holes being in a line perpendicular to the central transverse line of the tag whereby when the tag is folded along said transverse line the two holes will register.

2. The herein described duplicate sales book comprising pairs of thin and thick leaves, the thin leaves being for office use and the thick leaves being for delivery use, the thick leaves being adapted to receive a written carbon impression from the thin leaves, and said leaves being provided in the book with registering holes of equal sizes, said holes in the thick leaves being for the application of wrapping cord.

3. In a duplicate sales book, the combination of thin and thick leaves arranged in pairs, each leaf comprising a pair of separable tags and the two tags of one leaf coinciding with the tags of the next leaf, and each tag of each leaf being provided with a plurality of oppositely arranged holes, the holes of one leaf registering with the holes of the next leaf.

ABRAHAM GREENSTEIN.

Copies of this patent may be obtained for five cents each, by addressing the "Commissioner of Patents, Washington, D. C."