3 Sheets--Sheet 1.

C. BARRETT.

Improvement in Dumping-Cars.

No. 129,515. Patented July 16, 1872.

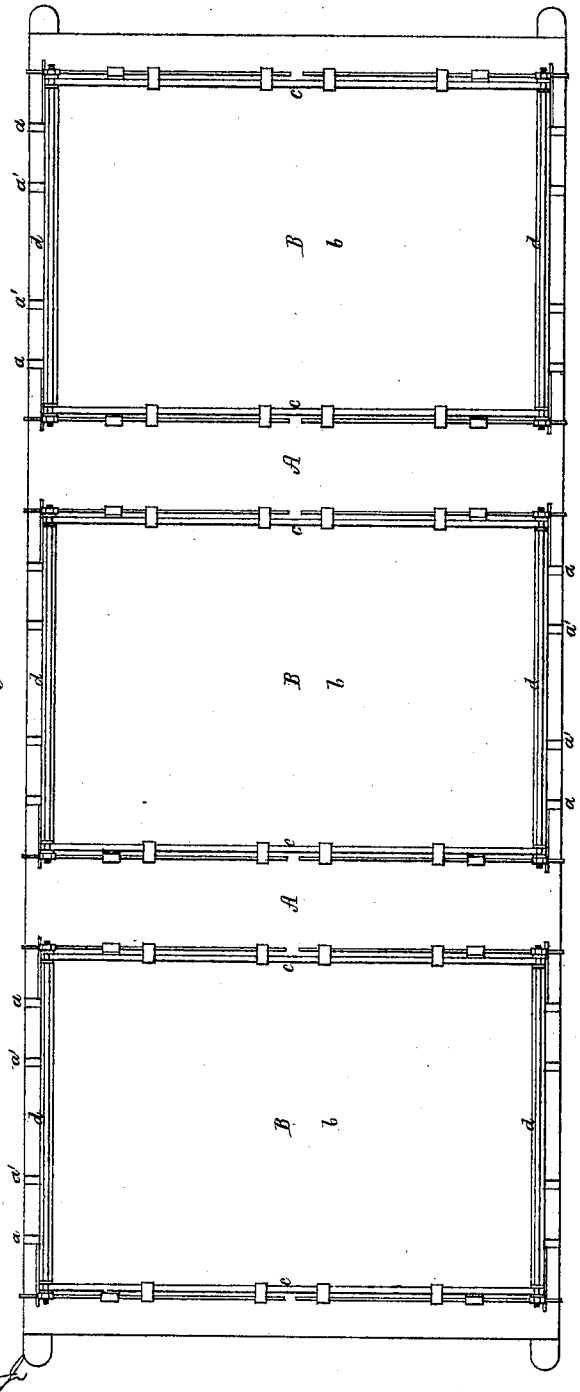

Fig. 1.

Witnesses.
Caleb Knowlton
N. E. Boardman

Charles Barrett
by his attorney
H. Curtis.

AM. PHOTO-LITHOGRAPHIC CO. N.Y. (OSBORNE'S PROCESS.)

3 Sheets--Sheet 2.

C. BARRETT.

Improvement in Dumping-Cars.

No. 129,515. Patented July 16, 1872.

Fig. 2.

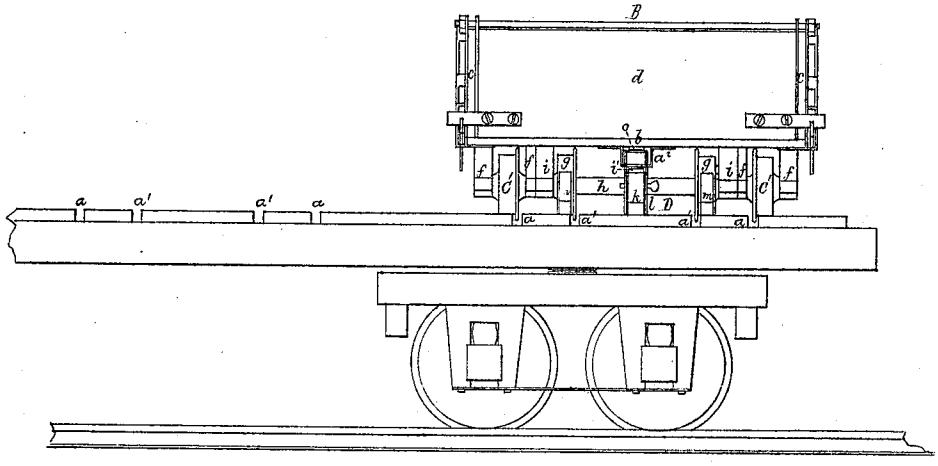

Fig. 3.

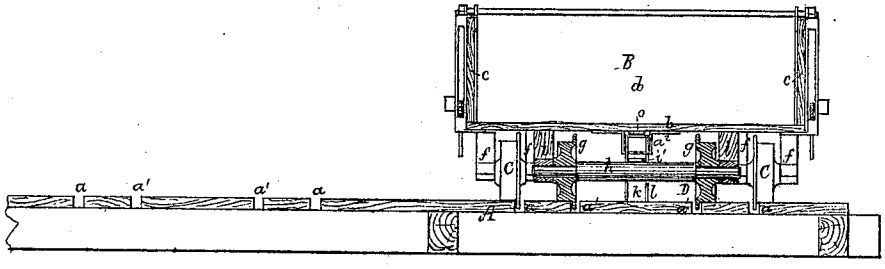

Witnesses.
Isaiah Trowbridge
W. E. Boardman

Charles Barrett.
by his attorney.
Curtis.

AM. PHOTO-LITHOGRAPHIC CO. N.Y. (OSBORNE'S PROCESS)

3 Sheets--Sheet 3.

C. BARRETT.

Improvement in Dumping-Cars.

No. 129,515. Patented July 16, 1872.

Fig. 4.

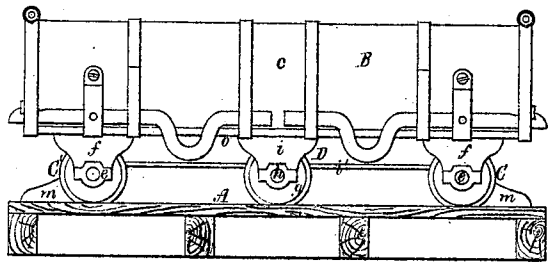

Fig. 5.

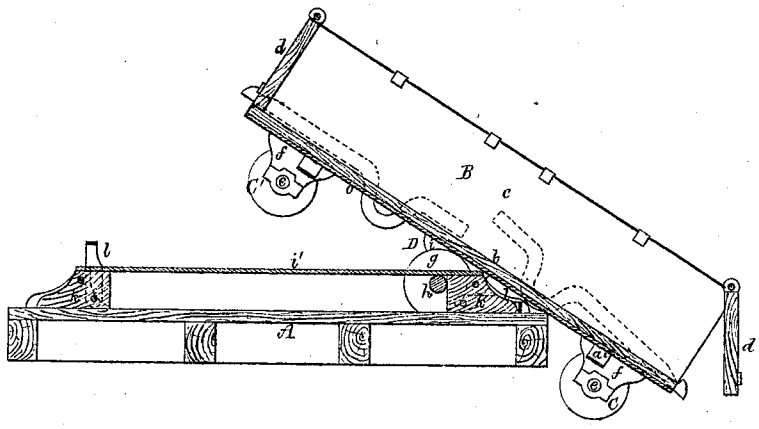

Witnesses.
Isiah Knowles
V. E. Boardman

Charles Barrett.
by his attorney.
H Curtis.

AM. PHOTO-LITHOGRAPHIC CO. N.Y. (OSBORNE'S PROCESS)

UNITED STATES PATENT OFFICE.

CHARLES BARRETT, OF BOSTON, MASSACHUSETTS.

IMPROVEMENT IN DUMPING-CARS.

Specification forming part of Letters Patent No. 129,515, dated July 16, 1872.

Specification of the invention of CHARLES BARRETT, of Boston, Suffolk county, Massachusetts, for certain Improvements in Railway Cars for the Transportation of Coal or Gravel.

This invention embraces certain improvements in the construction of railway cars for the transportation of coal or gravel; the purpose of the said improvements being mainly to enable the load to be dumped or discharged upon either side of the track, and to effect this discharge in an easy and expeditious manner. To this end my present invention consists mainly in mounting upon the top of a long platform railway car a series of smaller cars or dumping-boxes, these auxiliary cars or boxes traveling in suitable sunken channels created in the platform of the car proper, and disposed transversely thereof, in order that any one of such boxes may be advanced to either edge of the latter and discharged, as hereinafter explained; and, secondarily, these improvements consist in the employment of a series of stops or abutments to arrest the motion of the dumping-box by abutting against the two adjacent wheels of the center truck in order to maintain the box in alignment with its ways or guides while either of the end trucks are raised from out of the latter; and also in the adoption of a divided axle or an independent axle to each wheel of the end trucks, which I employ in order to permit of the use of a central raised bar or rail, which surmounts the axle of an additional or auxiliary pair of wheels placed in the center of each box, and which not only constitute a support for the same when one end truck projects beyond and clear of the side of the car proper, but the axles or journals thereof serve as a pivot, upon which the box may be tilted into an inclined position in the act of discharging its load.

The accompanying drawing represents in Figure 1 a plan, in Fig. 2 a side elevation, in Fig. 3 a longitudinal and vertical section, and in Figs. 4 and 5 transverse and vertical sections, of a railway platform-car provided with a number of dumping-boxes in accordance with my present invention, in carrying out which I proceed as follows:

A in said drawing represents the platform or floor of a railway platform-car, upon which I deposit a number of auxiliary cars or dumping-boxes, B B, &c., as shown in Fig. 1. Across the upper surface of the platform or floor A I produce a number of narrow channels, $a\ a\ a^1\ a^1$, &c., which constitute guides for the wheels of the dumping-boxes, as hereinafter explained, the depth of these channels being greater than that of the flange of the said wheels, thus permitting the tread thereof to travel upon the floor A. Each dumping-box B is composed of a platform, *b*, two rigid sides, *c c*, and two swinging tail-boards or gates, *d d*, one at each end, these tail-boards being pivoted at top and swinging outward, and being provided with suitable hooks or catches to hold them in position until the load is dumped, such hooks being actuated automatically upon the tilting of the box in such manner as to release the tail-board when the proper slope has been acquired and allow the load to be discharged below it. The wheels composing each end truck of the box B are shown at C C, each being mounted upon an independent axle, which revolves in two hangers, *f f*, depending from the under side of the platform *b* at or near each end thereof. To the center of the platform *b* I apply a truck, D, of ordinary production, composed of two wheels, *g g*, and an axle, *h*, the latter revolving in hangers *i i* depending from the said platform *b*. Immediately over the axle *h* of each dumping-box B, and longitudinally and centrally of the latter, I dispose a horizontal rail, *i'*, which nearly spans the platform or floor of the car proper at right angles to its greatest length, the ends of such rail being supported upon blocks or posts *k k* erected upon said floor. The purpose of the rail *i'* and of the blocks *k k* is to prevent accidental lifting or escape of the intermediate truck D or the box to which it is applied, and to constitute a means of confining said box to the car-floor in transit in lieu of blocking its wheels. To effect this locking I apply to the blocks *k*, at each end of the rail *i*, a swing-stop, *l*, which may be elevated into an erect position immediately outside of an ear, a^2, affixed to each end of the bottom of the dumping-box. I provide two pairs of channels or ways for the guidance of the wheels of each dumping-box, the channels for the outer and end trucks being shown at *a a* and for the inner or intermediate trucks at *a' a'*. At each side of the floor A I erect a series of stops or abutments, *m*, two for each wheel of the center truck of

the dumping-boxes, these stops being so disposed with respect to the channels *a' a'* as to intercept the said wheels when the dumping-box has reached the extreme of its movement in either direction. To the under side of the platform *b* of each dumping-box I affix a longitudinal central strap, *o*, which serves both as a brace to strengthen such bottom and as a stop to determine, in a small degree, the pitch or slope of the dumping-box as it is tilted into an inclined position; and the thickness of this strap may be varied as occasion requires should it be found desirable to change such slope. Should objections be urged against the short axles of the end trucks of the dumping-box they may be dispensed with, and the wheels C C, composing each end truck of the box B, may be connected by an axle revolving in two hangers and depending from the under side of the platform *b;* but in such case the position of the center and end trucks must be reversed with respect to gauge, the axle *h* of the center truck being lengthened so as to place the wheels *g g* on a line outside the hangers in which the axles of the end trucks revolve, as shown in Fig. 6. If this plan should be adopted the stops *m m m m* and the horizontal bar *i'*, together with the blocks *k k*, now placed longitudinally and centrally of the box B, may be dispensed with, and instead thereof the horizontal bar *i'* and blocks *k k* may be placed on the outside of the hangers *f*, in which the axles of the end trucks revolve and between them and the wheels *g*, the axle *h* of the central truck D abutting against the blocks *k k* when the dumping-box B has reached the extreme of its movement in either direction. The contents of the dumping-box are discharged by running it to one or the other side of the platform A until it partially overhangs the edge of the latter, and until its central wheels bring up against the stops *m m*, when the whole box may be tipped into an inclined position, swinging upon the central axle or journal as a pivot.

In the construction of my present improvements I assimilate somewhat closely to some of the features of a dumping-box shown in Letters Patent of the United States numbered 123,762 and issued to me on the 20th day of February, 1872, and I avail myself herein of several advantages found in such patented dumping-car.

The construction of this last-named invention did not permit the box to be tilted, and its load discharged, except at one end only. Under my present invention the contents of the dumping-box may be discharged with equal facility at either end, and consequently at either side of the railway track.

Should the dumping-box, as it approaches the edge of the car, incline to tilt upon its axle before reaching the point at which it should properly do so, injurious results might follow. To avoid this danger I propose to place upon one side of such dumping-box a ledge or bar, which shall act in conjunction with stops erected upon the car-platform, in such manner that the box is prevented from tilting into an inclined position until the proper point is reached.

Claims.

I claim as my invention—

1. A traveling dumping-box for railway cars provided with end trucks, as set forth, and an auxiliary central truck whose axles or journals serve as a pivot upon which the box may be tilted from either side of the car, in combination with rod or rods *i'* and stops *k*, substantially as and for the purposes stated.

2. In combination with the central truck, the axles of the end trucks of the dumping-box, arranged as described, and the central rail or bar *i'*, substantially as shown and set forth.

3. The combination of the end axles, the central truck, the rail or bar *i'*, and the stops *m*, substantially as and for the purposes shown and set forth.

4. The combination with a railway platform-car, of a series of dumping-boxes or auxiliary cars, arranged in relation thereto, and constructed to operate, as herein shown and described.

CHARLES BARRETT.

Witnesses:
F. CURTIS,
W. E. BOARDMAN.