(12) UK Patent Application (19) GB (11) 2557498 (13) A

(43) Date of A Publication 20.06.2018

(21) Application No: 1802774.8

(22) Date of Filing: 11.05.2015

Date Lodged: 21.02.2018

(30) Priority Data:
(31) 20140605 (32) 13.05.2014 (33) NO

(62) Divided from Application No
1620931.4 under section 15(9) of the Patents Act 1977

(51) INT CL:
F23J 15/06 (2006.01)

(56) Documents Cited:
None

(58) Field of Search:
INT CL F23J
Other: WPI, EPODOC

(71) Applicant(s):
Aker Solutions AS
P.O. Box 94, Lysaker NO-1325, Norway

(72) Inventor(s):
Kjell Olav Stinessen
Geir Inge Olsen
Tome-Arne Solhaug

(74) Agent and/or Address for Service:
HGF Limited
Document Handling - HGF - (Aberdeen), 1 City Walk, LEEDS, LS11 9DX, United Kingdom

(54) Title of the Invention: **Power plant with zero emissions**
Abstract Title: **Zero emission power plant**

(57) A method for generation of electrical power and/or steam or vapour, by combustion of carbonaceous fuels, where carbonaceous fuel is combusted in a combustion chamber at a pressure of 40 to 200 bar in the presence of oxygen enriched air or substantially pure oxygen to produce electrical power and/or to generate steam from fluids circulating in steam tubes arranged inside the combustion chamber, and a flue gas, where the flue gas is withdrawn from the combustion chamber and is cooled to a temperature that according to the plots in figure 1 result in condensation of the flue gas, or conversion of the flue gas to a supercritical fluid having a density of at least 600 kg/m^3, and where the liquid or supercritical fluid formed, is safely deposited, and a plant for carrying out the method, are described.

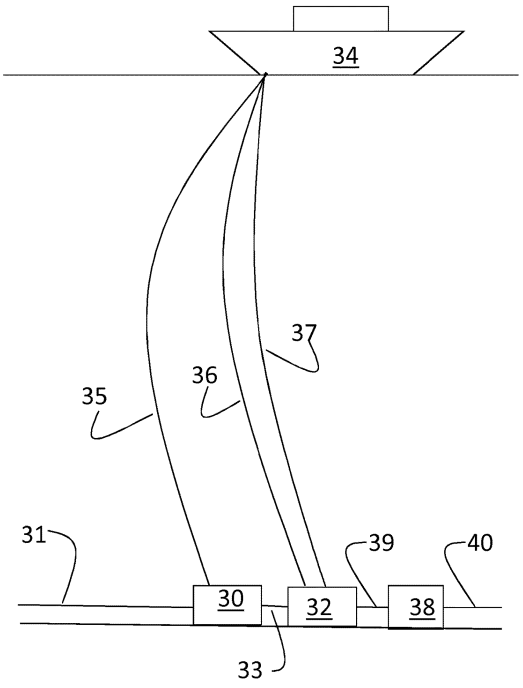

Fig. 7

GB 2557498 A

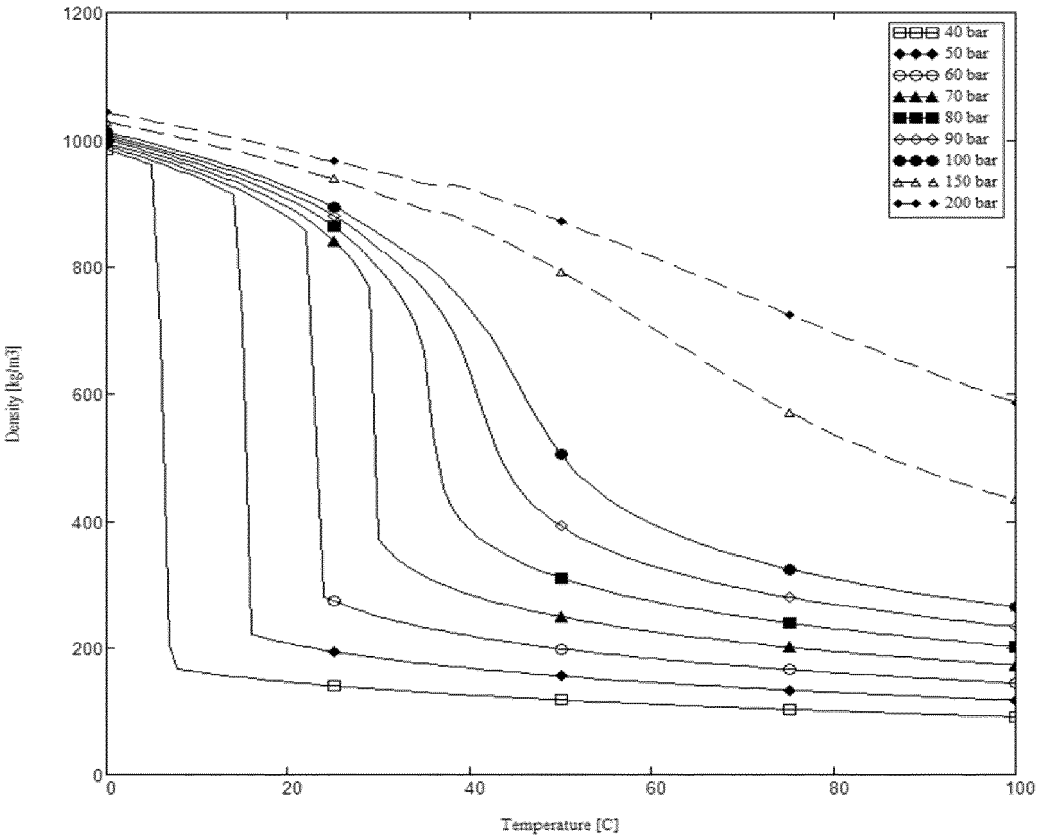
Density [kg/m3]
Temperature [C]
40 bar
50 bar
60 bar
70 bar
80 bar
90 bar
100 bar
150 bar
200 bar
0
200
400
600
800
1000
1200
0
20
40
60
80
100

Fig. 1

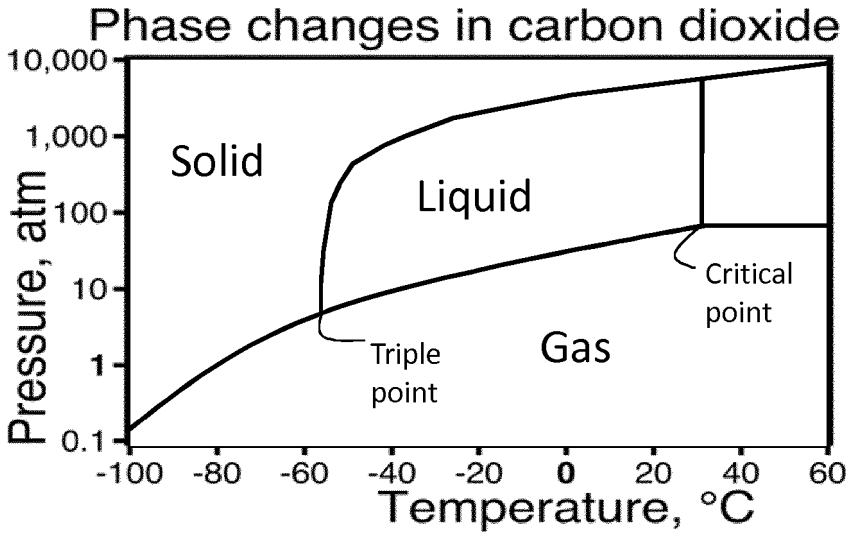
Phase changes in carbon dioxide
Pressure, atm
Temperature, °C
Solid
Liquid
Gas
Triple point
Critical point
10,000
1,000
100
10
1
0.1
-100
-80
-60
-40
-20
0
20
40
60

Fig. 2

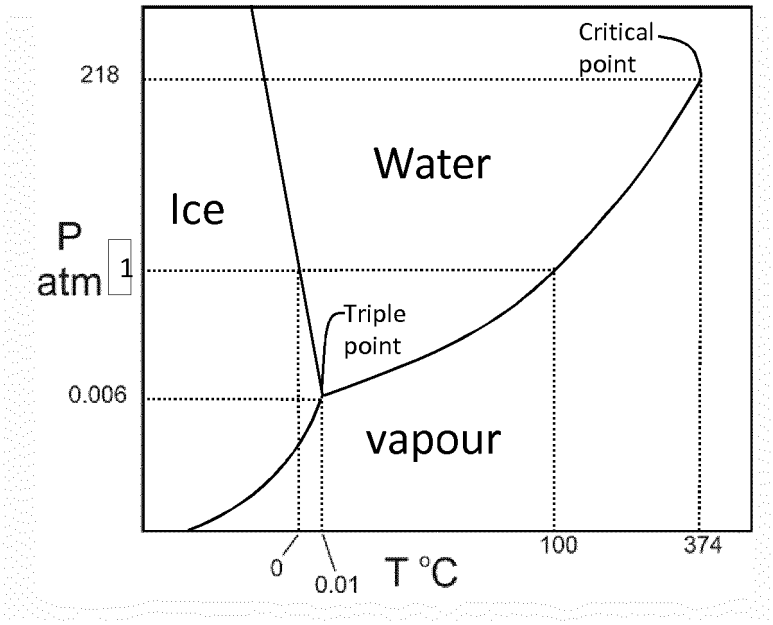
Critical
point
218
Water
Ice
P
atm
1
Triple
point
0.006
vapour
0
0.01
T °C
100
374

Fig. 3

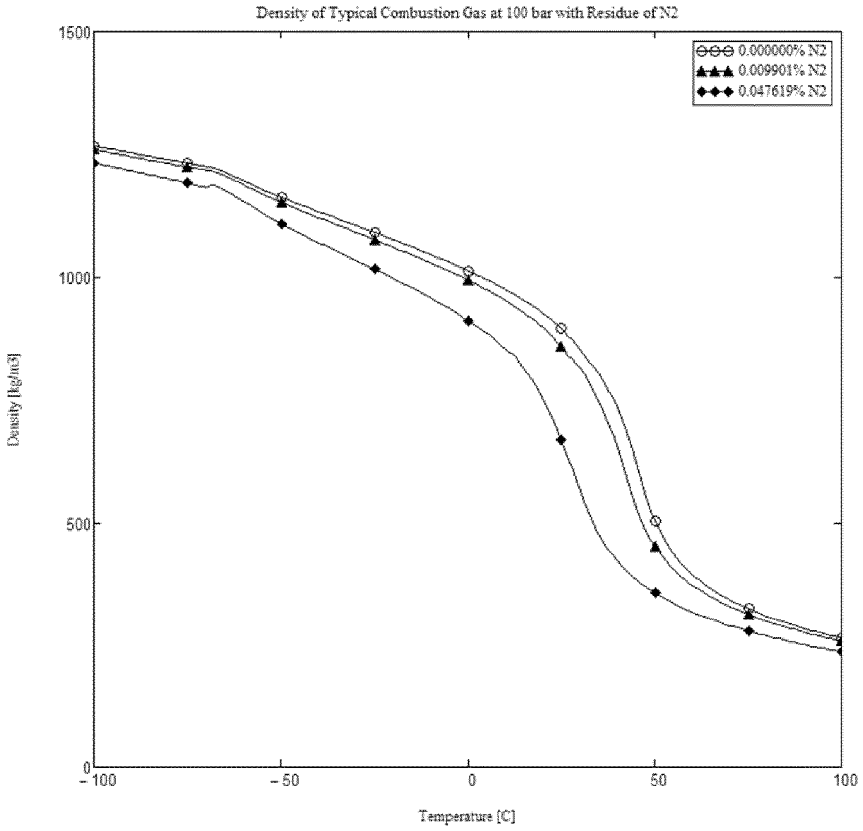
Density of Typical Combustion Gas at 100 bar with Residue of N2
0.000000% N2
0.009901% N2
0.047619% N2
Density [kg/m3]
1500
1000
500
0
-100
-50
0
50
100
Temperature [C]

Fig. 4

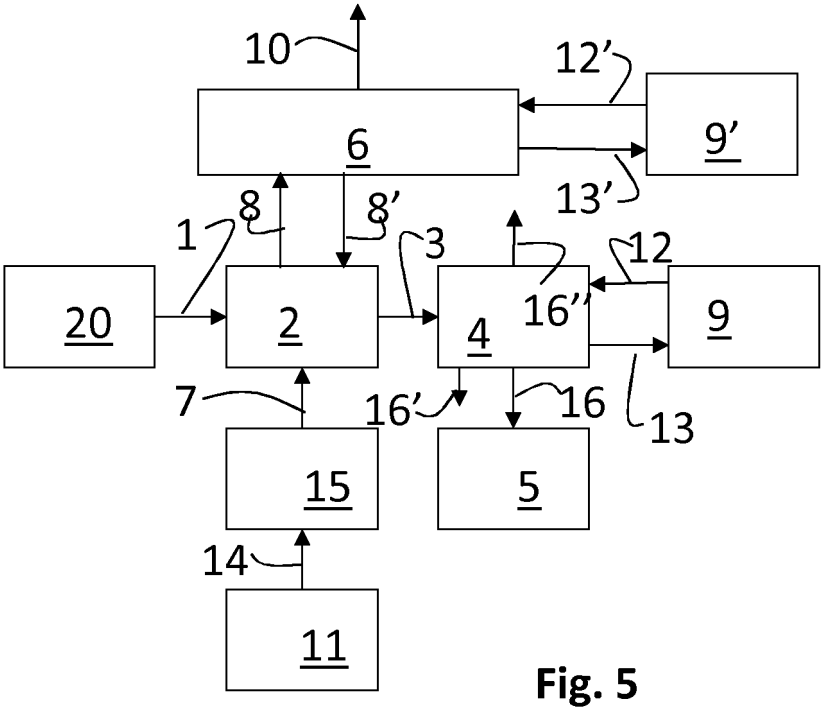
10
12'
6
9'
13'
8
8'
1
3
12
20
2
4
16''
9
7
16'
16
13
15
5
14
11

Fig. 5

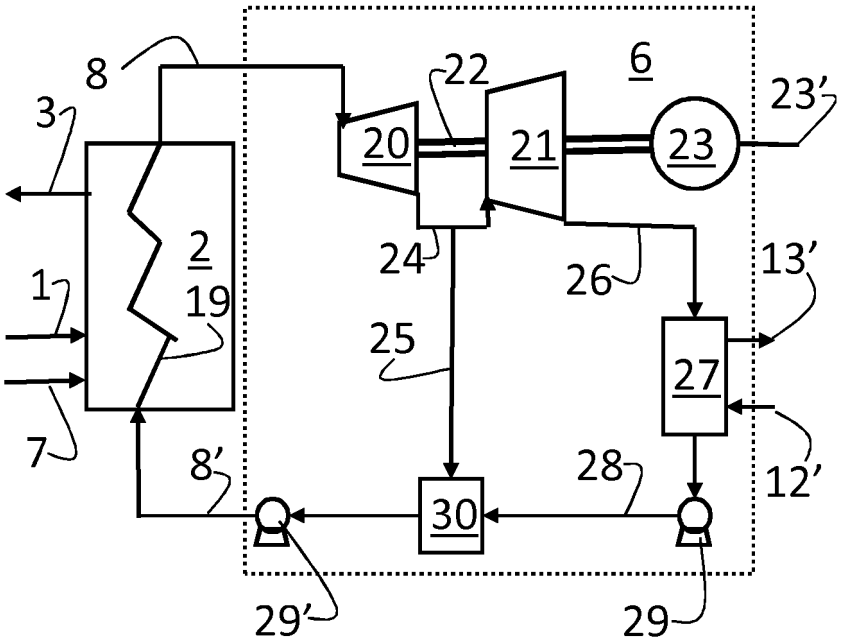
8
22
6
23'
3
20
21
23
2
24
26
13'
1
19
25
27
7
8'
28
12'
30
29'
29

Fig. 6

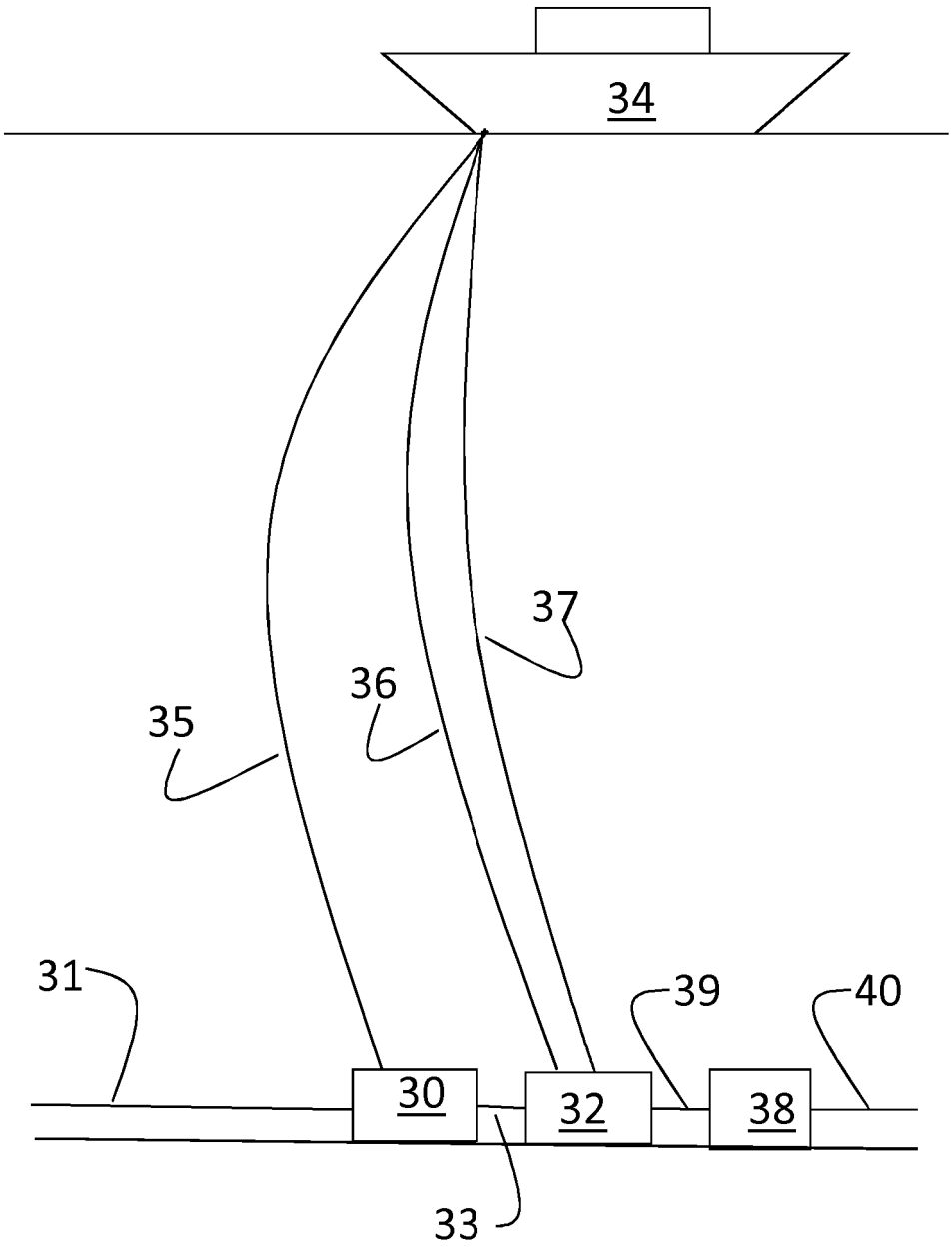

Fig. 7

Description

POWER PLANT WITH ZERO EMISSIONS

Technical Field

[0001] The present invention relates a method for generation of power plant with CO_2 capture, where electrical power and/or steam is/are produced from combustion of carbonaceous fuel, and to a plant for carrying out the method. More specifically the present invention relates to a method and plant where the carbonaceous fuel is combusted at an elevated pressure using oxygen enriched air or substantially pure oxygen as oxidant, and where CO_2 is captured by cooling the exhaust gas from the combustion at an elevated pressure to produce liquid or supercritical CO_2.

Background Art

[0002] Many of the oil and /or gas reservoirs are relatively small, but the total amount of oil and gas in such reservoirs is substantial. At remote locations, such as at offshore locations, the start-up and running cost today are too high to start production. Additionally, large volumes of natural gas, produced as associated gas is separated from the oil and is re-injected into the reservoir as pressure support as the cost for transporting the gas to the marked is too high.

[0003] Infrastructure such as pipelines, or loading facilities for loading tank vessels, including necessary pre-processing, or a LNG plant, is often a limiting factor for subsea production of oil and gas, and most specifically natural gas and gas-condensate.

[0004] If no infrastructure for transport of the natural gas is present where sub-terrain natural gas is found, and the natural gas source is too small to build a new infrastructure, the natural gas may be characterized as “stranded gas”, and any wellbores will be sealed and the site closed. Additionally, the pressure of the produced gas is reduced with time, and compression is

necessary to keep the production at a profitable level, also resulting in either added cost or abandoning the gas production.

[0005] To reduce the capital costs, large amounts of stranded gas are known but never exploited as setting up pipelines or an LNG plant to transport the gas by ships are too expensive given the price of natural gas at the worlds marked. Natural gas associated with, and produced together with oil, is in many cases, compressed and re-injected into the gas and oil field to maintain the pressure therein, and to avoid the need for expensive handling of the natural gas. Stranded gas is a substantial energy source that may be exploited e.g. by production of electrical energy, in addition to heat as steam, for local use at an oil and gas field, or for production of electrical energy for export from an oil or gas field.

[0006] In the present situation with the discussion of global heating and emission of CO_2, the authorities in most countries would be reluctant to, or even not allow construction of an offshore power plant. This is due to the CO_2 emission from such a plant, as all combustion of carbonaceous fuels results in production of CO_2 that if released into the atmosphere will contribute to the increase in CO_2 concentration in the atmosphere. However, CO_2 if captured from any source, such as from exhaust gas from combustion, is of high value if injected into an oil well, for avoiding that the pressure in the oil well drops below a level where oil production becomes low and difficult of expense to produce.

[0007] In Norway, the authorities has decided to ban the present practice with local gas turbine based power plants on offshore oil and/or gas fields, and plans are being made for electrification of some fields, i.e. building power lines to transport electricity from shore to offshore oil and gas fields to reduce the CO_2 footprint of such fields.

[0008] Offshore power production for delivery of electricity to local and remote consumers, may be an alternative to export of the natural gas. However, it

is assumed that most relevant national authorities and or international requirements will not allow such power plants without CO_2 capture.

[0009] Technology for CO_2 capture and storage (CCS) have been developed to capture CO_2 from production facilities where carbonaceous fuels are combusted to produce electric power. The presently available technology for the carbon capture part are either based on CO_2 capture from the flue gas by means or absorbents, or oxyfuel plants where purified oxygen is used for the combustion instead of air, to obtain a flue gas mainly comprising CO_2 and some water.

[0010] Plants for absorption of CO_2 from flue gas are presently too large, and too expensive both in capital cost and operating cost, even for operation onshore, and would be far too expensive to build offshore. Pilot scale oxyfuel plants using coal as fuel have been built i.a. by Vattenfall, and tests are presently done at such plants. The combustion in such oxyfuel plants is at atmospheric pressure or somewhat higher, and the flue gas has to be pre-treated for removing pollutants and particles therein before the flue gas is further treated and compressed for transport / injection into a deposition site.

[0011] US 3,736,745 relates to a supercritical thermal power system where a fuel oil is combusted using pure oxygen at high pressure. The exhaust gas is partly expanded over a gas turbine to produce electrical power. The exhaust gas is cooled, dried and further cooled to give a fluid or supercritical fluid CO_2, which is recycled into the combustion chamber to control the combustion and temperature therein. The excess CO_2 is removed from the system.

[0012] US 2009293782 relates to method and a system for generation of electrical power, where a carbonaceous fuel is combusted in a furnace in the presence of pure oxygen to generate heat. After cooling by heat exchanging to generate steam, water is removed from the exhaust gas to

leaving an exhaust gas mainly comprising CO_2. A part of the CO_2 is recycled into the combustion chamber, whereas the remaining exhaust gas is compressed and cooled to produce fluid or supercritical CO_2.

[0013] WO2013036132 relates to an integrated system for offshore industrial activities with fume injection. It is described to inject the exhaust gas (CO_2 + N_2) into a hydrocarbon reservoir to enhance the hydrocarbon recovery.

[0014] One object of the present invention is to provide a technology allowing for offshore power production of electrical power and/or heat, based on combustion of carbonaceous fuels, combined with capture of CO_2 at a lower cost than by known prior known solutions. Other objects of the invention will be clear to the skilled person by reading the present description.

Summary of invention

[0015] According to a first aspect, the present invention relates to a method for generation of electrical power and/or steam or vapour, by combustion of carbonaceous fuels, where carbonaceous fuel is combusted in a combustion chamber at a pressure of 40 to 200 bar in the presence of oxygen enriched air or substantially pure oxygen to produce electrical power and/or to generate steam from fluids circulating in steam tubes arranged inside the combustion chamber, and a flue gas, where the flue gas is withdrawn from the combustion chamber and is cooled to a temperature that according to the plots in figure 1 result in condensation of the flue gas, or conversion of the flue gas to a supercritical fluid having a density of at least 600 kg/m^3, and where the liquid or supercritical fluid formed, is safely deposited.

[0016] High pressure combustion using pure oxygen or oxygen enriched air as defined herein makes it possible to convert the flue gas from the combustion to liquid or supercritical dense phase fluid CO_2 or a

combination of H_2O and CO_2 by cooling by heat exchanging against surrounding water and/or air. Preferably, cooling water is used.

[0017] As may be seen from figure 1, at a pressure of 40 bar, the exhaust gas from the present power plant will have a density >600 kg/m^3 at a temperature of 5 °C or colder. Accordingly, in areas having a water temperature of about 3 °C or colder, it is possible to obtain a liquid or supercritical fluid exhaust gas having a density of >600 kg/m^3 at a pressure of >40 bar. At 50 bar, the temperature at which the exhaust gas will be liquid or a supercritical fluid having a density of >600 kg/m^3 is about 15 °C.

[0018] According to one embodiment, the flue gas is cooled to a temperature of 40 °C or lower, such as 30 °C or lower, such as 20 °C or lower, or 10 °C or lower. The preferred temperature is dependent on the pressure at which the combustion takes place, as is evident from the plot of figure 1 and the phase diagrams of figures 2 and 3.

[0019] According to one embodiment, the cooling is performed in two or more steps, where water present in the flue gas is condensed and separated from the remaining flue gas, and where the remaining flue gas thereafter is further cooled for condensing of CO_2 or conversion of the CO_2 to a supercritical fluid. Separation of H_2O and CO_2 may be preferred in embodiments where dry, or substantially dry CO_2 is requested.

[0020] According to one embodiment, CO_2 and water is condensed together to give a mixed fluid and/or supercritical fluid. Depending on the requirements set for the use of the CO_2, it may be allowed to combine CO_2 and water. This is the case if the CO_2 is to be deposited as a CO_2 hydrate, or if a mixture of CO_2 and water is needed or allowed for injection in a subterrain formation.

[0021] According to one embodiment, the combustion chamber is a boiler for generation of steam or vapour, and where the steam or vapour is used to produce electrical power in a steam power plant.

[0022] According to an embodiment, the combustion is an oxidation in a fuel cell to generate electrical power.

[0023] According to one embodiment, the carbonaceous fuel is natural gas and/or condensate, and where the natural gas and/or condensate is/are introduced at the production pressure, or is expanded to the pressure in the combustion chamber if the production pressure is higher than the pressure of the combustion. The natural gas and/or condensate may be introduced at the production pressure, or expanded to a preferred pressure for the combustion, to avoid the necessity of compressing the natural gas as will be the case with a normal gas power plant. Accordingly, no compression is needed, a fact that recuses the energy demand for the capture of the CO_2 by making the flue gas liquid or to a dense supercritical fluid for safe depositing.

[0024] The carbonaceous fuel may alternatively be methane hydrate.

[0025] According to one embodiment, the supercritical fluid or condensed CO_2 or CO_2 and H_2O mixture, is deposited by injection into a sub-terrain formation such as an aquifer, an abandoned oil or gas well, or into an oil well for enhanced oil recovery.

[0026] According to a second aspect, the present invention relates to a plant for generation of electrical power and capturing of CO_2, the plant comprising a source for substantially pure oxygen or oxygen enriched air to a combustion chamber for combustion of carbonaceous fuel at a pressure of 40 bar or more, where steam tubes are arranged in the combustion chamber for cooling the combustion gases in the combustion chamber by generation of steam or vapour from a fluid circulating in the steam tubes, a flue line for withdrawal of flue gas from the combustion chamber and for

introduction of the flue gas into a condenser in which the flue gas is cooled for condensing of, or forming a supercritical fluid having a density of at least 600 kg/m^3, of CO_2 and any H_2O, present in the flue gas, and a CO_2 withdrawal line for withdrawal of condensed liquid or supercritical fluid from the condenser.

[0027] The combustion chamber may be a boiler for generation of steam, or a fuel cell.

[0028] According to one embodiment, the plant comprises different modules like combustion module, boiler module, heat exchanger module, turbine module, pump module, compressor module, that all may be isolated from the remaining plant for maintenance and repair, or for exchanging one module with a spare module. Modularisation may be the key for success for such a plant, especially if located subsea or in remote locations, as changing modules prepared for being replaced, may reduce time and cost for repair by changing modules for service or repair.

[0029] According to one embodiment, redundant modules are arranged in parallel for redundancy.

Brief description of drawings

[0030]

Fig. 1 shows plots of fluid density as a function of temperature of a flue gas at different pressures,

Fig. 2 is a phase diagram for CO_2,

Fig. 3 is a phase diagram for H_2O,

Fig. 4 shows plots of fluid density as a function of temperature at 100 bar pressure for a flue gas including different amounts of nitrogen,

Fig. 5 is a flow diagram of a typical plant according to the present invention,

Fig. 6 is a principle sketch of a gas turbine power plant, and

Fig. 7 is a principle sketch of an embodiment of the present invention.

Detailed description of the invention

[0031] The present invention is based on the fact that natural gas and oil with associated gas have a pressure of typically 40 to 300 bar when coming up from a well bore. The pressure of the gas is reduced during the lifespan of a gas well, and when the pressure falls below about 70 bar the production is normally so low that it needs boosting by compression of the produced gas to keep profitable, and when the pressure falls to 20 bar, the gas well is normally closed down and production stopped.

[0032] Additionally, the invention takes advantage of the basically unlimited availability of cold water for cooling in some coastal areas and at the sea bed at many offshore gas fields. The proposed invention eliminates or significantly reduces the above challenges and disadvantages of subsea gas production and well-stream transportation by introducing pressurized combustion of the gas and use the heat to produce electric power that can be used locally, transported to other offshore locations or transmitted to shore in a power cable that can be connected to electric grid. In other cases all or some of the power can be used at receiving platform, e.g. for running compressors, or for industrial purposes at shore.

[0033] Carbonaceous fuels as used in the present description and claims is used to encompass all kind of materials comprising carbon, such as coal, natural gas, hydrocarbon condensate, oil, lignite, and methane-hydrates, in addition to wood and other biomaterials. Preferred carbonaceous fuels for use as fuels according to the present invention, are natural gas, methane hydrates, hydrocarbon condensates, or higher hydrocarbons, such as oil, or mixtures of any of the mentioned preferred carbonaceous fuels.

[0034] Natural gas produced at a combined oil and gas field or a gas field, normally comprises high amounts of methane, some ethane, butane and

propane and minor amount of C_{5+} hydrocarbons. Gas condensate is gaseous at the temperature and pressure in the sub-terrain formation, but is liquid at atmospheric pressure and ambient temperature. Gas-condensate comprises mostly C_{2-12} alkanes. The term "natural gas" is herein used to encompass hydrocarbons that are gaseous at ambient temperatures, methane hydrates, i.e. methane clathrates forming solids in subterrain formations and sediments on ocean floors, and gas-condensate, i.e. hydrocarbons that are gaseous in the subterrain reservoir but condensates to a liquid at atmospheric pressure and ambient temperature at the surface.

[0035] The term oxidant as used herein is used to encompass substantially pure oxygen and oxygen enriched air comprising 90 % or more oxygen, and where the rest of the gas mainly comprises nitrogen and/or other gases normally present in air. Preferably, the oxidant as used herein comprises 95 % or more of oxygen, such as more than 97% or more than 99 % oxygen.

[0036] Percentages as used herein with regard to gases, relates to % by volume if not specifically indicated elsewise. The term "combustion" as used herein is used to include combustion with an open flame, the oxidation finding place in a fuel cell, or any form of catalysed oxidation of the carbonaceous fuel in the presence of an oxidant as defined herein to form CO_2 or a mixture of CO_2 and H_2O dependent on the composition of the fuel. "Elevated pressure " as used herein, relates to pressures of 40 bar or more if not specifically indicated.

[0037] According to the present invention produced natural gas, or any other carbonaceous fuel, is introduced into a combustion chamber at the pressure of at least 40 bar, and substantially pure oxygen or oxygen-enriched air is introduced into the combustion chamber as oxidant. When using natural gas, oil or hydrocarbon condensate, the fuel is introduced

into the combustion chamber at the production pressure, or the fuel is expanded to a pressure of at least 40 bar, if the pressure of the produced stream is too high to be introduced directly into the combustion chamber. The skilled person will also understand that the pressure may be reduced relative to the production pressure at the well head, due to pressure drop in intervening pipelines and any process steps for preparing the fuel for the combustion chamber.

[0038] The phrase “combustion chamber” as used herein is meant to encompass any structure in which combustion of the fuel in form of natural gas, or any other carbonaceous fuel is combusted by oxidation with oxygen. The combustion chamber may thus be a steam boiler, a combustion chamber of a gas turbine, a fuel cell etc.

[0039] Combustion of a carbonaceous fuel using an oxidant that is substantially pure oxygen or oxygen enriched air results in a flue gas mainly comprising CO_2 or CO_2 and water, dependent on the composition of the fuel. Combustion of coal will result a flue gas mainly comprising CO_2, whereas all hydrocarbons will give a flue gas comprising some water. The skilled person is able with simple means to calculate the ration of CO_2 to H_2O in the flue gas based on the composition of the fuel used.

[0040] The flue gas from the combustion is after leaving the combustion chamber, cooled in a conventional way in several steps by means of heat exchangers and coolers, to reduce the temperature of the flue gas. The skilled person will understand that flue gas at a temperature that is useful in generating steam preferably is used for steam generation by heat exchanging. Flue gas at lower temperatures are cooled against water, such as sea water surrounding an offshore installation.

[0041] The fluid properties of a given compound at a given combination of temperature and pressure may be found by studying the phase diagram of the compound in question. The phase diagrams of CO_2 and H_2O are

shown in figures 2 and 3, respectively. The critical point of a compound is the combination of temperature and pressure at which the compound may exist in gas phase, liquid phase or in a supercritical phase. The critical point of CO_2 is 31.1 °C and a pressure of 72.9 bar. At a temperature higher than the critical temperature, i.e. 31.1 °C for CO_2, CO_2 will exist in a supercritical phase, a supercritical fluid, provided that the pressure is above 72.9 bar. The density of a supercritical depends on the pressure. The higher the pressure is, the higher is the density, and will approach the density of a liquid. Dense supercritical phase CO_2 having a density of higher than about 600 kg / m^3, such as higher than about 650 kg/m^3, or preferably higher than 700 kg/m^3 may be treated as a liquid for pumping etc. The skilled person knows that supercritical fluids share properties with both gases and liquids. In compressing, a supercritical fluid density will be increased with increasing pressure, and a dense critical phase having a density as indicated here, is “pumpable”, i.e. the pressure may be further increased by using a pump as for liquids.

[0042] Figure 1 is a diagram showing how CO_2 liquid forms from a mixed flue gas of CO_2 and H_2O (the composition of the flue gas used for the calculation has a content of 44.1657 % CO_2 and 55.6425 % H_2O and the rest is excess of O2 , 0.001928 %,resulting from combustion of a typical natural gas with a stoichiometric amount of oxygen). Figure 1 illustrates the combination of pressure and temperature which ascertains that a flue gas consisting of CO_2 and H_2O, in addition to a minor amount of oxygen, has a sufficiently high density to either be liquid, or in a liquid like dense supercritical phase allowing the fluid to be pumped. At pressures examined and plotted in figure 1, i.e. 40 to 200 bar, CO_2 will be a supercritical fluid if pressure and temperature are above the critical point, and will change phase from supercritical fluid to a liquid if the pressure is above the critical pressure and the temperature is lower than the critical

temperature of CO_2. Figure 1 clearly shows that the flue gas will condense at pressures down to about 40 bar and at a temperature of about 5 °C, a temperature that is achievable by heat exchanging against seawater at the sea bed in cold to temperate climates. At a pressure of 70 bar, the flue gas will condense at about 30 °C. For pressures between 70 bar and 40 bar, the flue gas will condense at temperatures between the one indicated for 40 bar and 70 bar. For pressures above 70 bar, figure 1indicates that supercritical fluid is formed at pressures above 80. A dense phase fluid having a density making the fluid "pumpable", is obtainable at temperatures from about 35 °C at 80 bar, to about 95 °C at 200 bar. Accordingly, figure 1 clearly indicates that the flue gas according to the present invention may be condensed or optionally form a dense supercritical fluid that may be pumped as a liquid. The pressure in the combustion chamber is set sufficiently high to ascertain that the flue gas from the combustion will condense or form dense phase supercritical CO_2 or CO_2 plus H_2O, as soon as the temperature is sufficiently low to form a liquid mixture of CO_2 and water when cooled at substantially the same pressure as mentioned above. The skilled person is able to calculate the pressure needed at given temperatures based on the plots in figure 1 and the phase diagrams for CO_2 and water, respectively, found in figures 2 and 3, and the composition of the flue gas. The gas used for the calculations plotted in figure 1 consists of 0.2 % oxygen, 55.6 % H_2O and 44.2 % CO_2, and corresponds to a typical flue gas from combustion of natural gas using substantially pure oxygen as oxidant.

[0043] It is clear from the density increase as the temperature is decreased, and that the flue gas used for the calculations, is liquid at a temperature of about 5 °C and a pressure of 40 bar, at about 15 °C at a pressure of 50 bar, at about 22 °C at a pressure of 60 bar, and at about 30 °C at a pressure of 70 bar. At a pressure of 80 bar or higher, the more "S" shaped

plots indicate that the flue gas is compressed to a dense phase supercritical fluid. At 80 bar, the supercritical fluid phase has a density of about 600 kg/m^3, which makes the supercritical fluid pumpable. The corresponding temperatures for resulting in a supercritical fluid having a density of 600 kg/m^3 at 90, 100, 150 and 200 bar, are about 42 °C, 47 °C, 75 °C and 98 °C, respectively. Accordingly, at a pressure of 40 bar or more, a flue gas from combustion of natural gas with pure oxygen will be in liquid state or will be a supercritical fluid having a density of higher than 700 kg/m^3 at a temperature of about 5 °C. Further detail on the density as a function of pressure and temperature for the flue gas, and the conditions for obtaining the flue gas as a liquid or a pumpable dense phase supercritical fluid are easy understandable for the skilled person studying figure 1 and the phase diagrams in figure 2 and 3. It is assumed that even by using oxygen enriched air, CO_2 and water will condensate and form a liquid, or form a pumpable dense supercritical fluid at the temperatures obtainable by using seawater as cooling medium.

[0044] The use of a oxidant having a too high content of contaminants, such as primarily nitrogen, will shift the phase diagram for the mixture and result in a demand for more cooling of the flue gas to obtain a flue gas being liquid or a liquid like dense phase. Figure 4 illustrates the density of the flue gas as a function of temperature at a pressure of 100 bar using pure oxygen, 99% oxygen and 95% oxygen as oxidant. The figure shows that a density of higher than about 600 kg/m^3 is obtained at about 47 °C by using pure oxygen, at about 40 °C by using 99 % oxygen, and at about 30 °C by using 95% oxygen. A high content of contaminants, normally nitrogen, in the oxygen demands cooling to a lower temperature compared to pure oxygen for a given pressure. Pressure and temperature are to some extent interchangeable, but from a practical point of view when naturally existing wellhead pressure shall be used for combustion followed by cooling the

flue gas with low temperature seawater to achieve liquid CO_2, the oxidant preferably comprises 95 % or more, and most preferably substantially pure oxygen comprising 99 % or more oxygen.

[0045] Cooling of the flue gas requires substantial cooling capacity, a capacity that is present at deep offshore locations, in some coastal areas, and in some larger lakes where the water temperature at the sea bottom all year through is about 4 °C or colder. In deep ocean locations, such as below 500 meters, the temperature of the sea may be about 0 °C, or even as low as -2 °C.

[0046] The critical point of CO_2 is 31.1 °C and a critical pressure of about 73 bar, as illustrated in figure 2. The access to substantially unlimited cooling capacity as cold sea water makes it possible to cool the flue gas to a temperature lower than the critical temperature of CO_2, 31.1 °C. To ascertain that the temperature is lower than the critical temperature, the flue gas is preferably cooled to a temperature lower than 20 °C, such as e.g. lower than 15 °C, such as about 10 °C. At a temperature lower than 20 °C and a pressure of about 55 bar, or above, the CO_2 present in the flue gas will condense and be present as a liquid, together with water present in the natural gas and water formed by combustion of the natural gas.

[0047] The phase diagram for H_2O shows that the critical point for water is at 374 °C and 218 bar (~atm), whereas the triple point is at 0.01 °C at 0.006 bar. The water will thus condensate at far higher temperatures than CO_2 at the pressures in question. This fact may be used to separate H_2O and CO_2 by stepwise cooling where condensed water is separated from gaseous CO_2 by means of a water separator between each step. Normally, a two-step cooling with a water separator between the cooling steps will be sufficient to remove most of the water from the flue gas if needed.

[0048] The liquefied CO_2 or CO_2/H_2O mixture captured this way may be deposited in different ways. Provided that the captured CO_2 fulfils the requirements for injection into a reservoir, the CO_2 may be injected for pressure support / Enhanced Oil Recovery (EOR). Alternatively, the CO_2 or CO_2 / H_2O mixture may be injected into a depleted oil and/or gas well, or into stable geological formations or an aquifer, that ensures permanent safe deposit of the CO_2.

[0049] At temperatures below 20 °C, and a pressure of more than 20 bar, i.e. at a water depth of 200 meters or more, CO_2 or a mixture of CO_2 and H_2O in combination with produced water and/or surrounding water will spontaneously form CO_2 hydrate (clatherate). The CO_2 hydrate is an ice-like solid that will remain as a stable solid as long as it is kept below said temperature and at 200 meters water depth or deeper. If needed, the kinetics of hydrate formation may be accelerated by the use of a hydrate formation reactor, a mixer ensuring good distribution and contact between CO_2 and the surrounding water, and the walls and surfaces of the reactor for promotion of hydrate formation, and/or by use of a catalytically active coating on the mentioned walls and surfaces, or by adding a chemical catalyst.

[0050] As shown above, the combination of combustion at an elevated pressure using substantially pure oxygen or oxygen enriched air as defined above as oxidant to produce electrical power and / or heat, cooling the pressurized flue gas resulting from the combustion to below the temperature causing the CO_2 to condense, and safely depositing the thus captured CO_2, makes it possible to produce power without emitting CO_2 into the atmosphere.

[0051] It should also be underscored that although the conditions for condensation of CO_2 are favourable subsea, the same can be achieved at power plants above sea, i.e. at surface, either on fixed or floating

platforms, ships and vessels or on land by operating at the pressure found in the mentioned subsea depths. By providing the power plant / combustion chamber in the area of the wells from which the gas is produced, unprocessed or partly processed gas can be routed to the combustion chamber at high pressure and the flue gas can be cooled either by seawater from the ocean or freshwater from a lake pumped to heat exchangers at surface. Alternatively, ambient air can be used for cooling by heat exchanging e.g. in cooling towers or other types of heat exchangers. The air temperature might form a limitation with regard to achieving sufficient cooling capacity by air-cooling, especially in hot climate areas. This can be solved by higher combustion and hence higher condensation pressure, e.g. 70 bar or more (ref. Figure 1).

[0052] Further, it should be noted that the process of high pressure combustion with oxygen or oxygen enriched air, can also be done by using low pressure sales quality gas from a process plant by compressing the gas to necessary high pressure, e.g. to 40 bar or higher, for achieving CO_2 condensation to liquid by using the ambient water-temperature or the ambient air for cooling. The pressure of the combustion must then be high enough to achieve condensation given by the temperature of the available cooling medium water or air. The skilled person is able to calculate the required pressure by the physical properties of the constituents of the flue gas as illustrated by the phase diagrams in figures 2 and 3. In this case the process of condensation does not have the inherently favourable conditions of combustion of gas from wells with high pressure and within the reach of available cold deep sea water. Still the process of generation of electric power and rather expensive compression of the gas before combustion and less efficient cooling by air or water at higher temperature than seawater from deep water depth (200 m or more) can be attractive due to the simple process of CO_2 condensation to liquid followed by

permanent deposition by pumping it into suitable geological formations or aquifers or as stable CO_2 hydrate.

[0053] Compression of the fuel gas can also be achieved by supply of liquid oxygen to the combustion chamber or burner because the liquid oxygen with a density of 1141 kg/m^3 will expand when evaporated by heating it. The density of oxygen gas at 25 °C and 1.013 bar is 1.429 kg/ m^3. This means that the pressure of a combustion chamber with some limited volume can be controlled to being at a desired pressure level by adjustment of the flow of carbonaceous fuel and of the expansion of the supplied oxygen necessary for the combustion. The combustion pressure will be a result of the supply of carbonaceous fuel at 1 bar and of the expansion of oxygen in the confined combustion chamber. If the required pressure not can be achieved by adjustment of the volume of the combustion chamber and flow of fuel with its necessary supply of liquid oxygen alone, compression of the carbonaceous fuel will also be necessary. Some control valves will normally be needed to control the pressure and the process in general, but such valve are not included in this patent description, because they are not necessary to understand the invention.

[0054] In addition to CO_2 and H_2O formed by combustion of the carbonaceous fuel, the flue gas can also contain water vapour from water that flows together with the carbonaceous fuel, which can be water vapour and free water, e.g. produced water from gas and oil wells. In well streams of hydrocarbons, there will normally be some content of particles, so called fines, and in coal, there will be ashes. If there is some content of nitrogen in the oxygen, this can form nitrous gases. In the case of injection of liquid water and CO_2, all mentioned contaminants might follow the liquid and thereby be permanently disposed. If the method of CO_2-hydrate formation is used, the particles may be trapped in the hydrate disposed at seabed.

Injection of CO_2-hydrate before it solidifies, i.e. in a kind of slurry, can also be used, and particles and other contaminants will follow the slurry to the receiver (i.e. geological formation or aquifer).

[0055] A generic process of subsea power generation is illustrated in Figure 5. It is important to note that the combustion or burning will be performed at a high pressure, typically between 40 and 250 bar to make it possible to directly produce liquid CO_2 or CO_2-hydrate by cooling of the flue gas towards ambient (seawater, freshwater or air) temperature without additional compression of the flue gas.

[0056] The skilled person will understand that combustion pressure has to be optimized, taking into account combustion technical issues, the design of equipment for the combustion and handling of pressurized fluids, power demand for compression of air or the oxidant as defined herein, etc. It may therefore be necessary / preferable to choke, or reduce, the pressure of natural gas having a higher pressure than the preferred combustion pressure. It is presently believed that a combustion pressure of 50 to 100 bar is practical. A pressure of 60 to 90 bar is presently more preferred, and it is assumed that the most preferred pressure of combustion is from 75 to 85 bar. As previously mentioned, a too low pressure that typically can occur at the late phase of gas production can be corrected by compressing the fuel to an optimum pressure before entering the combustion chamber.

[0057] Figure 5 is a principle sketch of an embodiment of a power plant according to the present invention. Carbonaceous fuel, such as natural gas, and an oxidant as defined above, are introduced into a combustion chamber 2 from a source 20 of the carbonaceous fuel via a fuel line 1, and from an oxidant source 11, via a pressurized oxidant line 7, respectively. Both the carbonaceous fuel and the oxidant are introduced into the combustion chamber at the pressure in the combustion chamber 2. An optional compressor or pump may be arranged between the oxidant source 11 and

the combustion chamber 2, if needed to give a sufficiently high pressure. If the oxidant is at a high pressure in the oxidant source 11, the pump or compressor 15 may be omitted.

[0058] According to the embodiment illustrated in figure 5, and in further detail in figure 6, the combustion chamber is a boiler, i.e. a combustion chamber where steam tubes 19 are arranged inside the combustion chamber to cool the combustion gases by means of a fluid circulating in the flowing in steam tubes 19. The flowing fluid may be water or any other convenient heat transfer fluid that may be vaporized and further heated in the steam tubes 19. Water / steam is the preferred fluid but other heat transfer fluids, such as organic fluids, may be used without leaving the scope of the invention.

[0059] Steam, or other vapour, generated in the steam tubes 19 is withdrawn through one or more steam line(s) 8. According to the embodiment illustrated in figures 5 and 6, the steam in steam line(s) 8 is introduced into a power-generating unit 6, illustrated as a steam power plant, for generation of electrical power that is withdrawn through a power line 10. The steam is cooled, expanded and partly liquefied by generation of electrical power in the power generation unit 6, and is further cooled to condensate the steam / vapour, before returning the liquid into the steam tubes 19 in the boiler 2.

[0060] The skilled person will understand that all or some of the steam / vapour in steam line(s) 8, may be used for other purposes than power generation, such as local heat demanding processes.

[0061] The flue gas is withdrawn from the combustion chamber 2 through a flue gas line 3, and is introduced into a condenser 4, wherein the pressurized flue gas is cooled by heat exchanging against a cooling medium, circulating in the condenser 4 so that the H_2O and CO_2 are condensed or are forming a dense supercritical fluid having a density of above 600

kg/m^3, as according to the definition above is pumpable. The skilled person will understand that the condenser 4 normally comprises several heat exchange steps for stepwise cooling of the flue gas. It can be seen from the phase diagrams for water and CO_2, see figures 3 and 4, water will condensate at higher temperature than CO_2 for a given pressure. Accordingly, water and CO_2 may be fractionated by first cooling to a temperature where substantially all water is condensed, and separate the liquid water from the gaseous CO_2, before the CO_2 is further cooled and condensed, if it is required to deliver CO_2 without water. Any separated water may be withdrawn through a not shown water extraction line, and may be released into the sea if allowed by the authorities, or be injected into a water injection well.

[0062] The cooling may be direct or indirect cooling. Direct cooling is effected by circulating surrounding water as a cooling medium through the condenser 4. Indirect cooling is effected by circulating a cooling medium between the condenser 4 and heat exchangers 9 where the cooling medium is heat exchanged against the surrounding water. The cooling medium to cool the flue gas is introduced into the condenser from a cooling medium intake line 12 and withdrawn through a cooling medium return line 13.

[0063] High-density supercritical fluid or liquid formed by cooling of the flue gas is withdrawn through a condensed flue gas line 16 for deposition in a deposit 5. Not condensed flue gas, comprising mainly nitrogen minor amounts of any inert gases may be withdrawn through a line 16' and may be released into the surrounding sea or air. Alternatively, the gas can follow the liquid and form multi-phase flow for injection, or for discharge to sea when the method of CO_2-hydrate formation is used for safe disposal.

[0064] Cooling capacity for condensing of the expanded steam for the power generation unit may be provided by means of heat exchanger(s) 9' where a cooling medium is circulated between the power generation unit 6 and

the heat exchanger(s) 9'in cooling medium lines 12' and 13'. Electrical power and/or steam is withdrawn from the power generation unit in power line 10.

[0065] The oxidant source 11 may be any convenient source for an oxidant being substantially pure oxygen or oxygen enriched air. The skilled person knows that such an oxidant may be provided by means of membrane-based systems and by means of cryogenic systems, both for separation of air gases. Electrolysis of water is an optional way for production of the oxidant to be used according to the present invention. Additionally, for smaller systems, substantially pure oxygen or oxygen-enriched air may be provided in tanks from remote facilities.

[0066] A facility for separation of air gases is conveniently arranged either at the sea bed, onboard a floater or on land. For a subsea plant according to the present invention, air for production of an oxidant as defined herein, or the oxidant as such has to be pressurized and transported in a riser or snorkel from a floater to the plant. If the facility for air gas separation is arranged at the seabed, the remaining air gases has to be transported by means of a snorkel or riser to the surface to be released into the surroundings.

[0067] Production of the present oxidant, i.e. substantially pure oxygen or oxygen enriched air, is energy demanding processes, and will require a part of the power produced in the present power plant. If electrolysis is used, the oxidant will be substantially pure oxygen. Additionally, hydrogen will be produced. The produced hydrogen may be a sales product by itself by exporting the hydrogen from the plant, may be used locally for further power production, and/or be used in a local or remote process plant for hydrogen demanding processes.

[0068] Natural gas, as produced from a subterrain gas producing well, either from a gas well or a combined gas and oil well, normally comprises water, particles, CO_2, and higher hydrocarbons in addition to the hydrocarbon

gas. Normally the natural gas is separated from the water, particles, CO_2 and higher hydrocarbons for efficient transport of the saleable gas. The natural gas to be used locally, i.e. close to the gas producing well, may be used as is. Optional separation of water (produced and condensed) and particles from the carbonaceous fuel, such as natural gas, may be arranged upstream of the combustion chamber, dependent on the composition of the gas in question. The separated water and any particles may be re-injected in an injection well, or disposed into the sea if allowed by the authorities.

[0069] Natural gas may alternatively be combusted without prior separation of water and/or particles. The presence of contaminants may require use of specially designed burner designed with selected materials to make it robust for the conditions.

[0070] By using substantially pure oxygen or oxygen enriched air with such low content of argon and nitrogen and other contaminants, the flue gas is not "diluted" with other gases than could prevent condensation of CO_2 and H_2O to liquids when cooling down the flue gas towards the level of the temperature of the ambient water or air. It is assumed that the maximum allowed content of argon and nitrogen combined is about 5 %, so that the oxidant comprises 95% or more oxygen. More preferred the oxidant comprises more than 97 % oxygen, such 99 % or more oxygen. This relates to all the embodiments described herein if nothing else is specifically stated.

[0071] Combustion of carbonaceous materials using an oxidant as described herein may result in high temperatures, temperatures that are not compatible with most materials used for construction of burners and combustion chambers. Dependent on the composition of the carbonaceous fuel used, recirculation of flue gas, i.e. CO_2 and H_2O and minor amounts of other gases, and/or addition of water into the

combustion chamber, may be necessary for controlling the temperature in the combustion therein.

[0072] If methane hydrate is introduced into a combustion chamber as a carbonaceous fuel, the water content of the hydrate that is released when burning the hydrate, inherently gives the benefit of cooling.

[0073] The electrical power generated in a power plant according to the present invention may be used locally, i.e. at an oil and/or gas-producing field, or be exported by cables to remote locations, either offshore or onshore.

[0074] Figure 6 illustrates the principles of a steam turbine power plant. Elements having the same reference numerals as figure 5 illustrates the corresponding elements. Carbonaceous fuel and oxidant are introduced into a combustion chamber 2 through lines 1 and 7, respectively. Flue gas is withdrawn from the combustion chamber 2 via flue line 3. Water is introduced into steam tubes 19 arranged in the combustion chamber, and steam generated therein is withdrawn through steam line 8 and introduced into the power generation unit 6 indicated with dotted lines in the figure. The steam is expanded over a high-pressure turbine 20, and the partly expanded gas is led through a line 24 to a low pressure turbine 21 before the expanded steam is withdrawn in an expanded steam line 26. The turbines 20 and 21 are arranged on a common axle 22 with a generator 23 for generation of electrical power that is exported via a power line 23'. Any water being condensed in line 24 is withdrawn in a condensate line 25. The expanded steam is cooled and condensed in a condenser 27 receiving cooling medium in cooling medium line 12'. Heated cooling medium is returned in the return line 13'. Condensed water is withdrawn from the condenser 27 in condensate line 28 and is introduced into a feed water heater 30, together with any condensate in line 25. Heated water from the feed water heater 30 is withdrawn via line 8' and introduced into

the combustion chamber as above described. Circulation mumps 29, 29' are arranged for circulation of the water in lines 28 and 8'.

[0075] The skilled person will understand that even though a steam turbine power plant is described above, alternative power generation units may be used according to the present invention. The core of the invention is that the combustion is carried out under elevated pressure so that the flue gas has a pressure allowing for condensation of CO_2 when cooling the flue gas below the critical temperature of CO_2, or to a temperature where the phase diagram of the gas shows that CO_2 will condense to form a liquid, alone or in combination with water present in the flue gas. Accordingly, any combustion using substantially pure oxygen or oxygen enriched air as oxidant, producing a flue gas mainly comprising CO_2 or CO_2 and H_2O, may be applicable.

[0076] An alternative combustion to a combustion chamber as described herein is a fuel cell, such as molten carbonate fuel cell, using natural gas as fuel and an oxidant as described herein, is applicable according to the invention. The skilled person will understand that heat generated in such a fuel cell may be used for generating steam for other purposes.

[0077] Figure 7 is a simplified view of an offshore power plant according to present invention. Natural gas is being produced from one or more sub-terrain and subsea gas well(s) and transferred to a subsea gas production unit 30 via one or more gas line(s) 31. The incoming gas has a pressure from about 40 bar to about 200 bar.

[0078] All, or some of the produced gas is introduced into a gas power plant 32 arranged at the seabed, via a gas line 33. Any additional natural gas may be transferred to a floater 34 via a gas export line 35 for further treatment and export from the gas field, or may be compressed subsea and exported via a not illustrated gas export line.

[0079] A facility for generation of oxygen enriched air or substantially pure oxygen is arranged either onboard the floater or at the seabed, as described above. Both cryogenic and membrane based units for generation of oxygen enriched air or substantially pure oxygen are known by the skilled person. As used here, the oxidant being substantially pure oxygen or oxygen enriched air, comprises more than 95 % oxygen, more preferably more than 97 % oxygen, and most preferably 99% oxygen or more. The skilled person will understand that the non-oxygen part of any of the gases mentioned mainly comprises nitrogen, often with trace amounts of noble gases, such as Ar. Oxygen, as air, or as an oxidant mainly comprising oxygen enriched air or substantially pure oxygen, is transferred to the power plant 32 in an airline 36, dependent on if the facility for production of the oxidant is based on the sea bed or onboard the floater 34. It is presently assumed that it is preferred to arrange the oxidant producing facility at the seabed, and have little or no processing equipment on the floater for a deep-sea installation if this kind.

[0080] The power plant 32 is according to one embodiment a steam turbine power plant, wherein steam is generated by heating of water by combustion of natural gas using the oxygen enriched air or substantially pure oxygen as oxidant. The pressure in the combustion chamber is typically 50 to 100 bar. A pressure of 60 to 90 bar is presently more preferred, and it is assumed that the most preferred pressure of combustion is from 75 to 85 bar.

[0081] The skilled person will understand that surrounding water is used for cooling and condensation of the steam in the steam turbine cycle as cold water is abundant. Electrical power and/or heat in the form of steam may be transferred to the floater 34 via a power umbilical 37, to a remote location by means of a power line 40.

[0082] The combustion in the combustion chamber of the power plant is controlled to give a substantially complete combustion, i.e. a substantially stoichiometric combustion so that substantially all the introduced natural gas and oxygen is used in the combustion. Combustion leaving less than 1 %, such as below 0.5 % or even less than 0.2 % rest oxygen in the flue gas is considered to be substantially stoichiometric.

[0083] The flue gas resulting from the combustion is transferred to a flue gas unit 38 via a flue gas line 39. The flue gas unit comprises coolers in which is cooled against the seawater surrounding the power plant to cool the flue gas to a temperature of 40 °C or colder, such as 30 °C or colder, such as below 20 °C, or even below 10 °C. The flue gas comprises mainly CO_2, some H_2O, and any nitrogen introduced together with the oxygen. Additionally, the flue gas may comprise minor amounts of impurities introduced together with the natural gas.

[0084] The CO_2 and water present in the flue gas will spontaneously condense and form a liquid phase, if the combination of pressure and temperature of the flue gas is held within the limits easily derivable from figure 1, or figure 4. The skilled person will be able to calculate the combinations of pressure and temperature that will result in condensation or formation of dense phase supercritical fluid based on standard calculations and parameters found in textbooks, for pressures not shown here. Any nitrogen and not used oxygen present therein will remain in a gas phase. The liquid and gas phases are easily separated, and the liquid phase mainly comprising water and CO_2, is exported from the plant in a CO_2 export line 40 for safe and accepted deposition of the CO_2. The CO_2 may be deposited by transferring the liquid CO_2 and water into a not illustrated injection module to be introduced into a sub-terrain formation where CO_2 may be safely deposited, such as a closed gas or oil well, or an aquifer. The CO_2 may also be injected into an oil well for pressure support for enhanced oil

recovery (EOR). The gas phase may be transferred to the surface and released into the atmosphere, be released into the surrounding sea, or follow the liquid as multiphase flow.

[0085] Oxygen enriched air or substantially pure oxygen is used as oxidant in the combustion to avoid dilution of the flue gas with nitrogen as such dilution will result in a larger volume of gas to be cooled and that the condensation temperature for the CO_2/water mixture is lowered due to the lower partial pressures of water and CO_2, respectively.

[0086] Even though the embodiment of figure 7 has been described with reference to a specific embodiment where the power plant is arranged at the sea bed, the skilled person will understand that invention is directed to pressurized combustion and condensation of the resulting CO_2 and water at the elevated pressure, and not if the power plant is at the sea bed or not. According, the power plant may be arranged on the floater, if it is regarded as more practical or advantageous to bring the natural gas and cooling water onboard the floater, and return the condensed CO_2 and water from the floater to the seabed for safe deposit of the CO_2 as described above.

[0087] The skilled person will understand that a plant according to the present invention may be arranged onshore, provided that the necessary cooling capacity is available. A plant according to the present invention may be arranged in coastal areas having easy access to cooling water from the sea or a large lake. If natural gas is used as the carbonaceous fuel, either from an offshore or onshore gas well, the present plant is preferably arranged sufficiently close to the gas well to receive the gas directly at substantially the same pressure as the gas is produced, as described above.

[0088] The skilled person will also understand that all or a part of the steam generated in the combustion chamber / the boiler, may be used for other

heat requiring purposes than generation of electrical power, depending on the specifics of the installation in question.

[0089] Independent on if the power plant is arranged at the seabed, at the floater or ashore, electrical power from the power plant may be used locally, such as onboard the floater, and/or on neighbouring power demanding installations, either at the sea bed and / at the surface or onshore, dependent on the location of the present plant. Any additional electrical power may be exported to more remote locations offshore or onshore, and may be connected to the land based electrical grid.

[0090] CO_2 or CO_2 + water generated in the above-described process and plant, can be of great value for injection into an oil or gas field for pressure support, and enhanced oil recovery (EOR). By combusting natural gas as described herein, both electrical power and/or steam to be used for different purposes, including optional export of electrical power from the installation, may be obtained at the same time as the gas volume for reinjection for EOR is maintained, or even increased, depending on the composition of the fuel. Accordingly, stranded gas may have a substantial value. Likewise, associated gas, that otherwise would have been re-injected for pressure support, may be used for generation of electrical power and/or steam, at the same time as the CO_2 by the combustion may be used to replace the natural gas for re-injection, and thus increasing the value of such gas.

Clauses

1. A method for generation of electrical power and/or steam or vapour, by combustion of carbonaceous fuels, where carbonaceous fuel is combusted in a combustion chamber at a pressure of 40 to 200 bar in the presence of oxygen enriched air or substantially pure oxygen to produce electrical power and/or to generate steam from fluids circulating in steam tubes arranged inside the combustion chamber, and a flue gas, where the flue gas is withdrawn from the combustion chamber and is cooled to a temperature that according to the plots in figure 1 result in condensation of the flue gas, or conversion of the flue gas to a supercritical fluid having a density of at least 600 kg/m^3, and where the liquid or supercritical fluid formed, is safely deposited.
2. The method of clause 1, wherein the flue gas is cooled to a temperature of 40 °C or lower, such as 30 °C or lower, such as 20 °C or lower, or 10 °C or lower.
3. The method of clause 1 or 2, wherein the cooling is performed in two or more steps, where water present in the flue gas is condensed and separated from the remaining flue gas, and where the remaining flue gas thereafter is further cooled for condensing of CO_2 or conversion of the CO_2 to a supercritical fluid.
4. The method of clause 1 or 2, wherein CO_2 and water is condensed together to give a mixed fluid and/or supercritical fluid.
5. The method according to any of the preceding clauses, wherein the combustion chamber is a boiler for generation of steam or vapour, and where the steam or vapour is used to produce electrical power in a steam power plant.
6. The method of any of the clauses 1 to 4, wherein the combustion is an oxidation in a fuel cell to generate electrical power.
7. The method of any of the preceding clauses, wherein the carbonaceous fuel is natural gas and/or gas condensate, and where the natural gas and/or gas condensate is introduced at the production pressure, or is expanded to the pressure in the combustion chamber if the production pressure is higher than the pressure of the combustion.
8. The method of any of the preceding clauses, wherein the carbonaceous fuel is methane-hydrate.

9. The method according to any of the preceding clauses, wherein the supercritical fluid or condensed CO_2 or mixture of CO_2 and H_2O, is deposited by injection into a sub-terrain formation such as an aquifer, an abandoned oil or gas well, or into an oil well for enhanced oil recovery.
10. A plant for generation of electrical power and capturing of CO_2, the plant comprising a source (11) for substantially pure oxygen or oxygen enriched air to a combustion chamber (2) for combustion of carbonaceous fuel at a pressure of 40 bar or more, where steam tubes (19) are arranged in the combustion chamber (2) for cooling the combustion gases in the combustion chamber by generation of steam or vapour from a fluid circulating in the steam tubes (19), a flue line (3) for withdrawal of flue gas from the combustion chamber (2) and for introduction of the flue gas into a condenser (4) in which the flue gas is cooled for condensing of, or forming a supercritical fluid having a density of at least 600 kg/m^3, of CO_2 and any H_2O, present in the flue gas, and a CO_2 withdrawal line (16) for withdrawal of condensed liquid or supercritical fluid from the condenser (4).
11. The plant according to clause 10, wherein the combustion chamber is boiler for generation of steam, or a fuel cell.
12. The plant according to clause 10 or 11, wherein the plant comprises different modules like combustion module, boiler module, heat exchanger module, turbine module, pump module, compressor module, that all may be isolated from the remaining plant for maintenance and repair, or for exchanging one module with a spare module.
13. The plant according to clause 12, wherein redundant modules is arranged in parallel for redundancy.

Claims

1. A method for production of electrical power and/or steam from carbonaceous fuels, comprising the steps:
   introducing a carbonaceous fuel and an oxidant comprising oxygen enriched air or substantially pure oxygen into a combustion chamber (2);
   combusting the carbonaceous fuel at a pressure between 40 and 200 bar to produce a flue gas; and
   withdrawing the flue gas from the combustion chamber (2) and cooling the flue gas to a temperature that results in condensation of the flue gas or conversion of the flue gas to a supercritical fluid having a density of at least 600 kg/m^3,
   wherein the method further comprises:
   transferring heat from the flue gas to a power generation unit (6) for generation of electrical power in a steam turbine power plant, and
   depositing the condensed or converted flue gas in a subterranean deposit (5).

2. The method of claim 1, wherein the flue gas is cooled to a temperature of 40 °C or lower, such as 30 °C or lower, such as 20 °C or lower, or 10 °C or lower.

3. The method of claim 1 or 2, wherein the cooling is performed in two or more steps, where water present in the flue gas is condensed and separated from the remaining flue gas, and where the remaining flue gas thereafter is further cooled for condensing of CO_2 or conversion of the CO_2 to a supercritical fluid.

4. The method of any of the preceding claims, wherein the cooling is performed by means of cold water from the sea or a lake.

5. The method of claim 4, wherein the method is performed in power plant arranged at the seabed and where the cooling is performed by means of the surrounding water.

6. The method of claim 4, wherein the method is performed at an offshore or off coast floater or platform.

7. The method of any of the preceding claims, wherein the carbonaceous fuel is natural gas from a subsea well, and where the natural gas is introduced at the production pressure, or is expanded to the pressure in the combustion chamber if the production pressure is higher than the pressure of the combustion.

8. The method of any of the claims 1 to 7, wherein the carbonaceous fuel is methane-hydrate.

9. The method according to any of the preceding claims, wherein the subterranean deposit (5) is an abandoned oil or gas well, or a well for enhanced oil recovery.

10. The method according to any preceding claims, wherein the step of transferring heat from the flue gas to a power generation unit is carried out via heat coils arranged in the combustion chamber (2).

Intellectual Property Office

Application No:	GB1802774.8	**Examiner:**	Mr Colin Walker
Claims searched:	1 to 10	**Date of search:**	28 March 2018

Patents Act 1977: Search Report under Section 17

Documents considered to be relevant:

Category	Relevant to claims	Identity of document and passage or figure of particular relevance
		None

Categories:

X	Document indicating lack of novelty or inventive step	A	Document indicating technological background and/or state of the art.
Y	Document indicating lack of inventive step if combined with one or more other documents of same category.	P	Document published on or after the declared priority date but before the filing date of this invention.
&	Member of the same patent family	E	Patent document published on or after, but with priority date earlier than, the filing date of this application.

Field of Search:

Search of GB, EP, WO & US patent documents classified in the following areas of the UKC^{X} :

Worldwide search of patent documents classified in the following areas of the IPC

F23J

The following online and other databases have been used in the preparation of this search report

WPI, EPODOC

International Classification:

Subclass	Subgroup	Valid From
F23J	0015/06	01/01/2006