June 18, 1929. L. G. NILSON 1,718,175

DYNAMOMETER

Filed Sept. 16, 1926 2 Sheets-Sheet 1

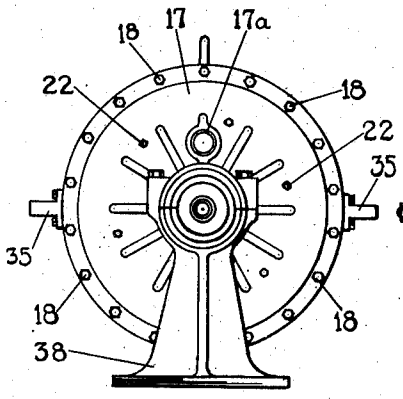

Fig. 1.

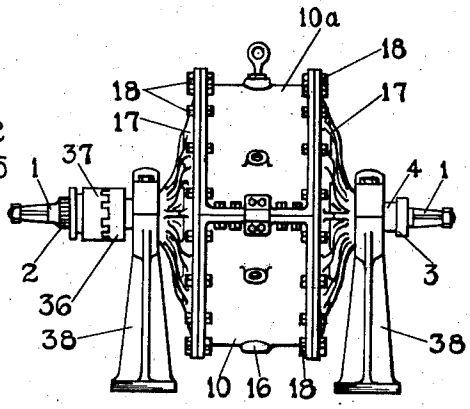

Fig. 2.

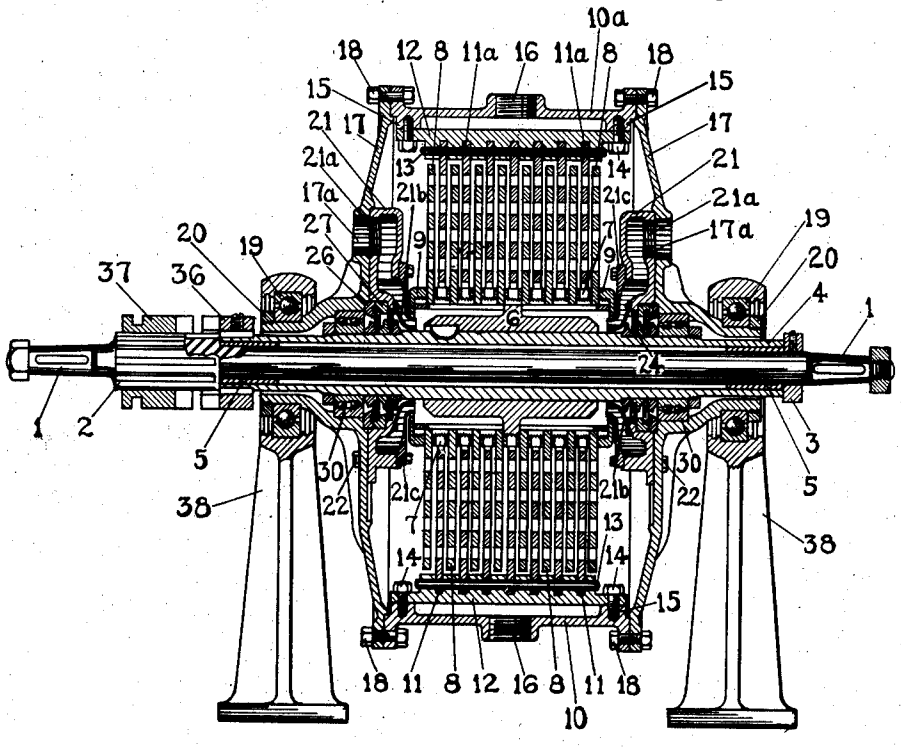

Fig. 3.

INVENTOR

Lars G. Nilson

June 18, 1929. L. G. NILSON 1,718,175

DYNAMOMETER

Filed Sept. 16, 1926 2 Sheets-Sheet 2

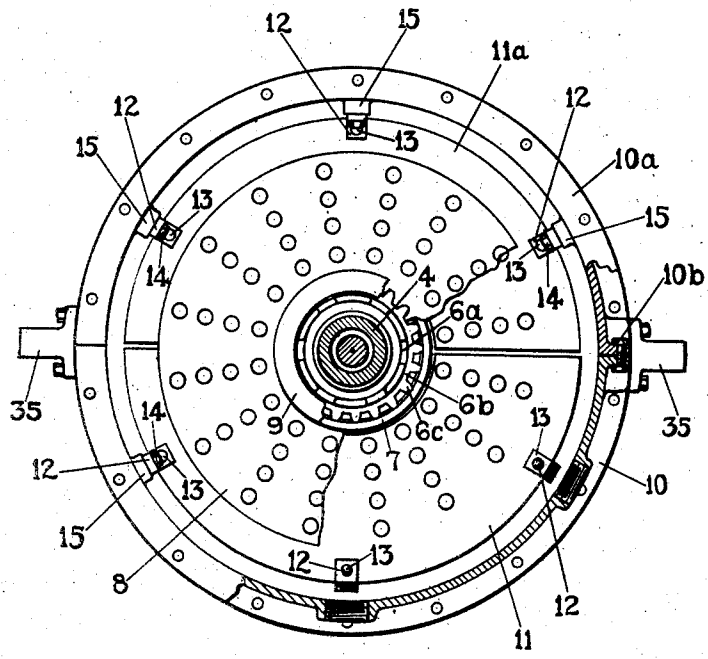

Fig. 4.

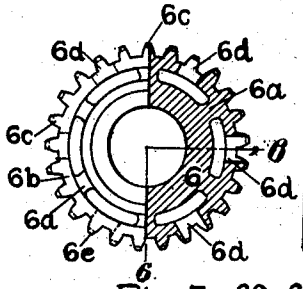

Fig. 5.

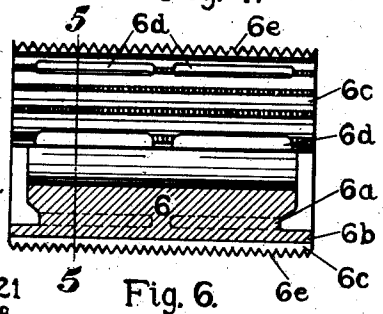

Fig. 6.

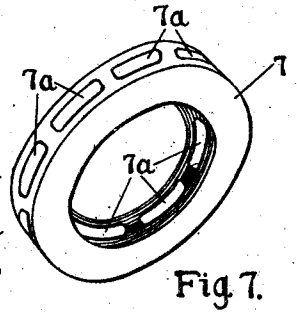

Fig. 7.

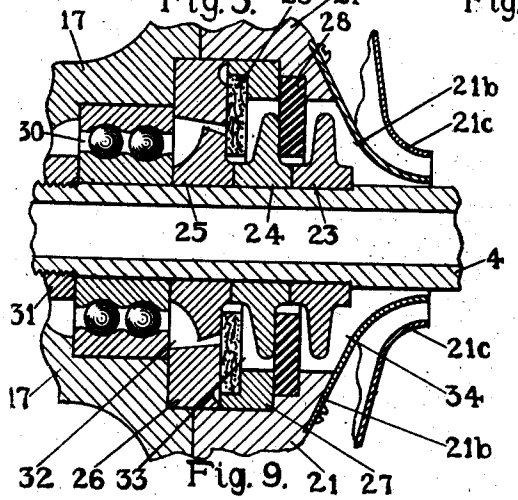

Fig. 9.

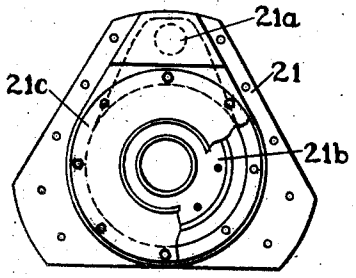

Fig. 8.

INVENTOR

Lars G. Nilson

Patented June 18, 1929. 1,718,175

UNITED STATES PATENT OFFICE.

LARS G. NILSON, OF HOBOKEN, NEW JERSEY.

DYNAMOMETER.

Application filed September 16, 1926. Serial No. 135,851.

This invention relates to improvements in rotary absorption dynamometers of the so-called "Webb" type, as described in United States Patent No. 669,568, in which the friction of revolving disks in a liquid is used as a medium for converting kinetic energy into heat. A number of dynamometers operating on this general principle are in use.

In order to fully show the advantages and importance of my improvements, which consist of certain novel parts and combinations of parts as will be pointed out with particularity in this specification, I shall refer briefly to the short-comings from the standpoint of practical use, of the conventional dynamometer or water brake of the Webb type. As usually constructed, a liquid, such as water, is taken in at one side of the revolving element close to its hub and has its outlet through selected openings located near the periphery of such element on the same side, the selection of the drainage point being based upon the amount of power to be absorbed by the dynamometer as dependent upon the depth of water in the casing.

Experience with dynamometers thus constructed shows that, as the result of centrifugal action on the entering liquid, the depth of water varies considerably from one side of the revolving element to the other. The lack of uniform circulation thus resulting cuts down very considerably the braking efficiency of the mechanism, by reason of the frictional effects on the different plates being very non-uniform. Again, the faulty circulation causes the formation of steam pockets which further reduce the effective friction surface and result in more or less violent fluctuations in the absorbed load.

The present mechanical construction of dynamometers of the type under consideration is not practical, since it does not admit at all of proper rotor balancing and there are no means of fastening together the various parts in groups for rapid final assembly. The stator plates must be assembled coincidentally with the rotor plates and inspection, repairs or replacement of either of these elements demands the extensive dismantling of the dynamometer. The very important matter of having the proper provision for keeping water out of the bearings is not adequately taken care of.

With the foregoing operating disadvantages in view, my invention provides for means to supply an abundance of water or other fluid to the axial region of the revolving element, in such manner that it is evenly distributed to the friction surfaces and afterwards collected in a region posterior to the stator friction element for final ejection. There are also provided an improved construction for a self-contained rotor, a divided casing, means to permit of group assembly of the stator plates, means for anchoring such groups to the casing, and means for preventing liquid from entering the bearings. My invention also provides, in its preferred form, for a rotating shaft of the tubular type, through which passes a central shaft. This central shaft is intended for direct coupling to the prime mover under test and also to such other type of mechanism, such as an electric dynamometer, as may be desired for starting purposes or for the measurement of small loads, in which case it can be run free of the tubular shaft. Means are provided for coupling the tubular and central shafts so as to engage the main dynamometer as desired.

The various features of novelty which characterize my invention are pointed out with particularity in the claims annexed to and forming a part of this specification. For a better understanding of the invention however, and the advantages possessed by it, reference will be had to the accompanying drawings and descriptive matter, in which I have illustrated and described some of the possible various embodiments of my invention.

In the drawings:

Fig. 1 is a vertical end view of the dynamometer.

Fig. 2 is a vertical side view of the dynamometer.

Fig. 3 is a vertical side view, in section, of the dynamometer.

Fig. 4 is a vertical end view, with pedestals and end bell removed, and certain parts broken away.

Fig. 5 is a vertical end view of the rotor drum or spider, with one-half in section on line 5—5 of Fig. 6.

Fig. 6 is a vertical side elevation in section along lines 6—6 of Fig. 5.

Fig. 7 is a perspective view of one of the rotor disk spacing nuts.

Fig. 8 is an inside view of one of the annular nozzles, in which part of the first cover plate has been broken away.

Fig. 9 is an enlarged cross-section of a water-seal device and adjoining parts.

Referring to Figs. 2 and 3, a central shaft 1 has an enlarged splined portion 2 near one end, and a collar 3 near the other end, the latter for taking care of end thrust in reference to a main tubular shaft 4. Two bearing shells 5 and 5 separate and retain the two shafts concentric with each other. A rotor spider or drum 6, made up of a hub portion provided with a plurality of outwardly extending spokes 6a, which support a rim 6^b, is fastened to the shaft 4 and is shown in detail in Figs. 5 and 6. Upon the rim 6^b are cut longitudinal spur teeth 6^c. between the spokes 6^a a plurality of openings or vents 6^d are cored through the rim 6^b for the purpose of distributing a fluid which is fed into the opening between the hub portion and the rim 6^b of the drum 6, as later described. On the points of the spur teeth 6^c a helical screw thread 6^e is cut for the purpose of receiving spacing nuts or collars 7.

A number of disks 8, preferably annular in form and perforated as shown, which have inwardly projecting teeth at their centers to engage with the teeth 6^c, are mounted upon the drum 6 and spaced from each other by means of the spacing nuts 7, shown in detail in Fig. 7, which latter are centrally threaded to engage with the screw threads 6^e and provided with radial openings 7^a. At each end of the drum 6 and screwed upon the threads 6^e is a clamping nut 9 which is provided with an inwardly projecting flange for the purpose of preventing escape of the supply liquid. The drum 6, annular disks 8, spacing nuts 7 and clamping nuts 9 combine with shaft 4 to form a rigid self-contained rotor which may be readily assembled or dismantled, and adjusted for running balance.

Castings 10 and 10^a, with end bells 17, the whole securely fastened together by means of the bolts 10^b and 18, provides a water-tight casing. The end bells 17 act also as supports for the dynamometer structure as a whole and have extended hollow journals which engage with the bearings 19, the latter being mounted upon the pedestals 38 and secured thereto by means of the lock nuts 20. Attached to the interior of the casing portions 10 and 10^a and secured thereto by means of the bolts 14 and bosses 15 are a plurality of supporting bars 12 which are notched to receive a plurality of perforated and approximately semi-circular stator plates 11, 11^a, which are secured thereto by means of the locking pins 13. These stator plates are equi-spaced and project interiorly, as shown, into the spaces between the rotor disks. Annular nozzles, arranged circularly about each of the end bells 17, provide for water supply. These nozzles, designated as 21 and shown in vertical section in Fig. 3 and in inside view in Fig. 8, consist of cored castings attached to the inner surfaces of the end bells 17, by means of the screws 22. Holes 21^a which are tapped for standard pipe thread receive water supply pipes which pass through clearance holes 17^a in the end bells 17. The orifices of the nozzles 21 are each formed of two curved annular plates 21^b and 21^c (see also Fig. 9) fastened respectively to the inside and to the bottom of the casting 21. A plurality of openings 16 are provided circularly about the castings 10 and 10^a for water egress. As will be seen, the casing portions 10, 10^a, end bells 17, supporting bars 12, semi-disks 11, 11^a and nozzles 21 combine to form a rigid self-contained stator element which may be readily assembled.

Centrally about the assembled casing portions 10 and 10^a and secured thereto by bolts are two blocks 35, as shown in Figs. 1 and 4. One of these blocks is intended to engage with a scale or other connection for the purpose of measuring the torque acting upon the stator element and the other provides for attaching weights for balance of the stator element, as in a manner well known to those versed in the use of dynamometers.

The ball-bearings 30, shown in Fig. 3 and in detail in Fig. 9, retain shaft 4 and end bells 17 in proper relation, the inner ball races being clamped to the shaft by lock nuts 31 and water seal ring 25 and the outer races being secured by the combined medium of the end bells 17 and water seal ring 26. Two oil and water seals, shown in detail in Fig. 9, which are located one at each side of the rotor between the bearings 30 and the spider 6, provide for preventing the escape of water and the damage to the bearings consequent thereto, as also to prevent the harmful splashing of oil. These seals are comprised of rings 23, 24 and 25 which are secured to the shaft 4, and rings 26 and 27 which are clamped between and held by end bells 17 and nozzle castings 21. Soft rubber rings 28, also secured at their outer edges between rings 27 and nozzle castings 21, and which freely contact with rings 24 are provided for checking the flow of water toward the bearing 30 in the event that the housing is filled with water when the dynamometer is at rest. Felt ring 29 secured between rings 26 and 27 provide barriers against oil-splashing from the bearings 30 to the rubber rings 28. Not shown on the drawings are provided means for supplying lubrication to the bearings 5 and 30 and also means for draining the annular spaces 32, 33 and 34.

While any type of clutch may be used for

the purpose of coupling the central shaft 1 to the tubular shaft 4, in Figs. 2 and 3 I have shown a positive jaw clutch of which one member 36 is keyed or otherwise secured to the tubular shaft 4 and the other member 37 is slidable on the splined portion 2 of shaft 1.

Having thus described the features of the preferred form of my invention, its operation and method of use will be clear from the following:

The engine, motor or other device, the torque of which it is desired to measure, is coupled to one end of shaft 1. The stator of the dynamometer is balanced and engaged with a weighing device through the medium of the blocks 35. Connections for the supply liquid are made (preferably through the medium of flexible hose) to the annular nozzles 21 at each side of the rotor, and one or more of the exhaust openings 16 are connected to a drainage system preferably by hose). When the torque device under test is started and shaft 1 is coupled to shaft 4, the rotor element of the dynamometer revolves. The resultant turning movement on the stator will be very slight, being due only to bearing friction and the friction caused by the disturbed air between the rotor and stator plates. When water is introduced into the interior of the drum 6, through the nozzles 21, centrifugal action will tend to uniformly diffuse it through the vents 6^d of the drum and vents 7^a of the rotor disk spacing nuts 7, to the spaces between the rotor disks 8 and the stator plates 11 and 11^a, thence to be drained by the openings 16.

The presence of the water in the interspacial regions of the dynamometer rotor and stator elements results in frictional resistance to the motion of the rotor element. The resulting turning moment acting on the stator, which is measured by a scale mechanism linking one of the casing blocks 35, is dependent upon the friction between the rotor disks and the water, the shearing action on the water acting at the edges of the rotor disk perforations, and also upon the momentum of portions of water caught in such perforated portions and thrown by centrifugal action against the stator plate elements.

The amount of power to be absorbed by the dynamometer may be controlled either by measuring or regulating the actual flow or quantity of water fed into the interior of the casing through the nozzles 21, in which case the exhaust openings 16 should be free to let the water escape with as little back pressure as possible. Or, the water exhaust may be restricted until a solid annulus of liquid is built up in the casing to the desired depth, just sufficient entrance liquid being introduced to keep the temperature within reasonable limits. More specific means and methods for controlling the power absorption are not introduced into this specification, as I intend to make these the subject of an additional patent application.

While I have more or less specifically mentioned water in speaking of the circulating medium introduced into my improved dynamometer for the purpose of converting kinetic energy into heat, it will be understood that a wide variety of liquids or fluids may be used. For example, oils, or very heavy liquids such as mercury may be used with very high efficiency.

While in accordance with the provisions of the statute I have disclosed and explained the best forms of my invention now known to me, it will be apparent to those skilled in the art that changes may be made in the modes of operation and forms of apparatus disclosed without departing from the spirit of my invention, and that certain features of the invention may sometimes be used without a corresponding use of other features.

I claim:

1. In a dynamometer, the combination with a plurality of plates and a revolving shaft with attached disks having surfaces opposed to and spaced from the surfaces of said plates, of a liquid interposed to resist the motion, and means including a vented spider mounted on and surrounding said revolving shaft for uniformly distributing said liquid.

2. In a dynamometer, the combination with a plurality of plates and a hollow revolving shaft with attached disks having surfaces opposed to and spaced from the surfaces of said plates, of a liquid interposed to resist the motion, and means including a vented spider on the said hollow revolving shaft for uniformly distributing said liquid.

3. In a dynamometer, the combination with a rotatable shaft of a casing sleeved thereon, plates keyed to said casing, a drum splined on said shaft, disks mounted on said drum and alternating with said plates, and means including vented spacing nuts for conducting a fluid from the interior of said drum to the surfaces of said disks and plates.

4. In a dynamometer, the combination with a rotatable shaft of a casing sleeved thereon, plates keyed to said casing, a drum splined on said shaft carrying disks, each of which has inwardly projecting teeth at its center, and means for conducting liquid to and from the surfaces of said disks and plates.

5. In a dynamometer, the combination with a rotatable shaft of a casing sleeved thereon, plates keyed to said casing, a drum splined to said shaft and having ports therethrough, disks mounted on said drum and alternating with said plates, and means including vented

spacing nuts for conducting a liquid through said drum to the surfaces of said disks and plates.

6. In a dynamometer, the combination with a rotor element comprising a plurality of spaced disks, of a stator element comprising a plurality of divided plate members, said divided plate members being preassembled in rigid groups and mounted in alternating space relation with the said disks.

7. In a dynamometer, the combination with a rotor element comprising a plurality of spaced disks, of a stator element comprising a plurality of spaced plate members, said plate members being divided, and means for rigidly sub-assembling said plate members to facilitate their mounting in alternating space relation with said disks.

8. In a dynamometer, the combination with a rotor element comprising a plurality of spaced disks, of a stator element comprising a plurality of divided plates, and means for rigidly supporting said divided plates in groups in definite space relation with the said disks.

9. In a dynamometer, the combination with a plurality of plates and a revolving shaft with attached disks having surfaces opposed to and spaced from the surfaces of said plates, of means for supplying a liquid to the spaces between said plates and said disks including a nozzle having an annular orifice surrounding said shaft, and means including a vented spider mounted on said revolving shaft for uniformly distributing said liquid.

10. In a dynamometer, the combination with a plurality of plates and a rotor element comprising a revolving shaft with attached disks having surfaces opposed to and spaced from the surfaces of said plates, of means including a vented spider on the said shaft for uniformly distributing a liquid to the spaces between said plates and said disks, a plurality of nozzles at least one at each end of said stator member, each nozzle having an annular discharge orifice surrounding said shaft for directing the flow of said liquid in an axial direction to the interior of said spider.

11. In a dynamometer, the combination with a stator element comprising a casing member provided with a plurality of plates and a revolving shaft with attached disks having surfaces opposed to and spaced from the surfaces of said plates, of a plurality of nozzles at least one at each end of said stator member, each of said nozzles being provided with an annular orifice surrounding said shaft for supplying a liquid in an axial direction, and a vented spider mounted on and surrounding said shaft communicating with said nozzles to receive the liquid from said orifices and to distribute said liquid uniformly between said plates and said disks.

Signed at New York in the county of New York and State of New York this 11th day of September A. D. 1926.

LARS G. NILSON.