(No Model.)

J. A. SECOR.

SAFETY APPLIANCE FOR LAMPS OR OIL STOVES.

No. 456,127. Patented July 14, 1891.

Fig. 1.

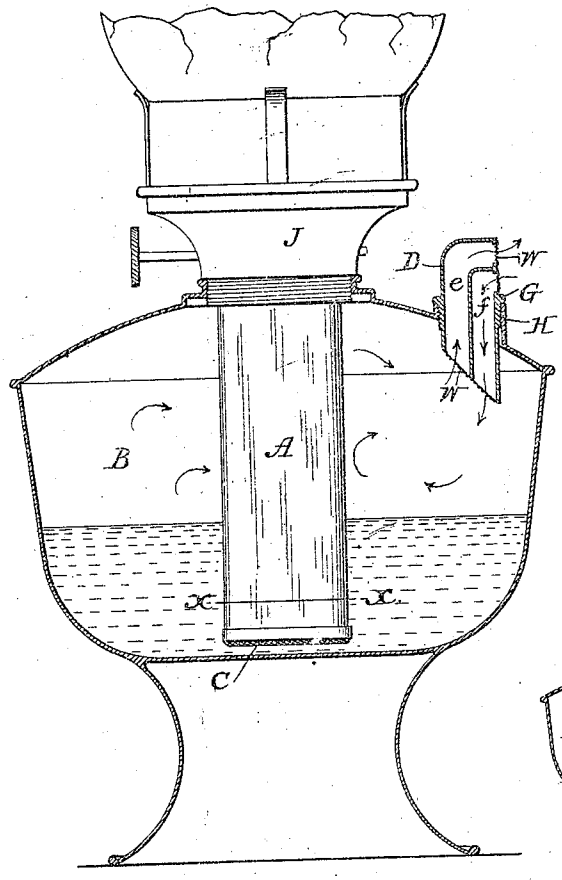

Fig. 3.

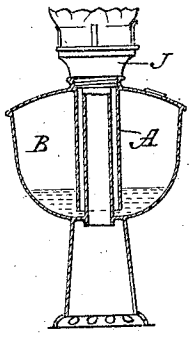

Fig. 2.

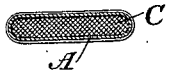

Attest:
A. N. Jeshua
E. M. Watson

Inventor:
John A. Secor
By David A. Burr
Atty.

UNITED STATES PATENT OFFICE.

JOHN A. SECOR, OF BROOKLYN, NEW YORK.

SAFETY APPLIANCE FOR LAMPS OR OIL-STOVES.

SPECIFICATION forming part of Letters Patent No. 456,127, dated July 14, 1891.

Application filed November 19, 1890. Serial No. 371,905. (No model.)

To all whom it may concern:

Be it known that I, JOHN A. SECOR, of Brooklyn, in the county of Kings and State of New York, have invented certain new and useful Improvements in Safety Appliances for Lamps or Oil-Stoves; and I do hereby declare that the following is a full and exact description thereof, reference being had to the accompanying drawings, and to the letters of reference marked thereon, making a part of this specification.

My invention is designed to prevent absolutely the explosion of oil lamps or stoves by reason of the generation therein of explosive gases.

It consists in devices, as hereinafter described and claimed, for preventing the flame of the burner from reaching the interior of the oil-fount by way of the wick-tube, and also for discharging the gas or vapor therefrom as rapidly as generated, and thereby preventing the production therein of an explosive compound.

In the accompanying drawings, Figure 1 is a central vertical section of a lamp embodying my invention, and Fig. 2 is a transverse section of the air-tight wick-tube in line *x x* of Fig. 1. Fig. 3 illustrates a modification in the formation of the wick-tube.

The first part of my invention relates to means for preventing the access of an igniting-flame to the oil-receptacle either in blowing out the lamp or from other cause. To this end I inclose the wick in an air-tight case or wick-tube A long enough to extend from the top of the lamp down within its fount or oil-receptacle B nearly to the bottom thereof, and I form or fit this long wick-tube in the top of the lamp with a gas-tight joint. This tube will meet the ordinary wick-tube in the burner and form a continuation thereof, so that the entire tube will then extend from the burning-point of the wick down to near the bottom of the oil-fount. The lower end of the wick-tube A is left open to admit an inflow of oil to the wick, but being at all times below the level of the oil in the lamp when it is in customary use, it is thereby sealed with a fluid seal, effectually preventing an inflow of gas thereto from the lamp, or an exit for an igniting-flame if such should possibly pass down the wick-tube. This open end of the tube is moreover guarded by a cap or cover C, of fine wire-gauze, which, in case the seal be broken by the emptying of the lamp, will still be effective in preventing any communication between an igniting-flame in the tube and any gas or explosive compound formed in the fount. A double guard is thus provided for the open end of the wick-tube, otherwise made perfectly gas-tight within the lamp—viz., first, a liquid seal, and, second, a safety-cap of wire-gauze, either of which will prevent or arrest the passage into or out of the tube of either an igniting flame or an explosive gas.

Where the lamp is of the type having a central-draft tube the tube may be made with double walls to form the continuous gas-tight inclosing-chamber for the wick, (see Fig. 4,) this annular tube being extended, as above described, and as shown in Fig. 3, to reach nearly to the bottom of the fount.

The second feature of my invention to be used in combination with the gas-tight sealed wick-tube is a double ventilating-tube D, adapted to be screwed into the filling-aperture of the lamp in place of the customary cap therefor. This ventilating appliance is constructed of a tube D, divided by a central longitudinal partition into two passages *e f*, and which is made fast in a threaded collar G, adapted to be screwed into the threaded seat H, encircling the filling-aperture for the lamp. Its upper end is bent so that the outer open ends of the two passages may be turned away from the burner J, and one of the passages *e* is made to open outwardly above the other *f*. The inner lower end of the double tube is beveled off in such manner as that the opening of the one passage *e* shall open into the lamp at a higher level than its twin passage *f*. This difference in height between both the inner and outer opening of the two passages will operate to induce a circulation of air through them between the outside and inside of the oil-receptacle, an inflowing current being induced through the lower passage *f*, and a corresponding outflowing current through the upper passage *e*, so that the gases generated within the lamp will be carried off as rapidly as formed through the upper passage

e. The accumulation of an explosive gas within the oil-fount is thus effectually prevented, and the lamp is kept cool by a constant circulation automatically established and maintained through the double ventilating-tube.

The ventilating-tube is preferably guarded against fire by screens W, of wire-gauze, fitted over both ends thereof.

I do not claim in itself as new the combination of wire-gauze with the wick-tube or ventilating-tube, this being a well-known safety device for lamps, burners, and oil-receptacles of various descriptions.

I claim as my invention—

1. The combination, with the fount of an oil-lamp, of a wick-tube closely fitting the wick and extending within the fount very nearly to the bottom thereof, said tube forming a continuation of the ordinary wick-tube in the burner and being gas-tight from the point where it enters the fount to its termination therein, where the oil enters the tube so as to be sealed until its liquid contents are exhausted, and a wire-gauze covering the inner end of said tube, substantially as described.

2. The combination, with the oil-fount of a lamp, of the single ventilating device adapted for insertion into its filling-aperture, constructed of the double tubes united in one piece and severally opening both outwardly and inwardly at different levels, substantially in the manner and for the purpose herein set forth.

3. The combination, with the oil-fount of a lamp, of the single ventilating device adapted for insertion into its filling-aperture, constructed of the double tubes united in one piece and severally opening both outwardly and inwardly at different levels and provided with wire-gauze, substantially in the manner and for the purpose herein set forth.

In testimony whereof I have signed my name to this specification in the presence of two subscribing witnesses.

JOHN A. SECOR.

Witnesses:
A. N. JESBERA,
E. M. WATSON.