J. P. COLEMAN.

CIRCUIT CONTROLLER.

APPLICATION FILED SEPT. 19, 1916.

1,321,809.

Patented Nov. 18, 1919.

2 SHEETS—SHEET 1.

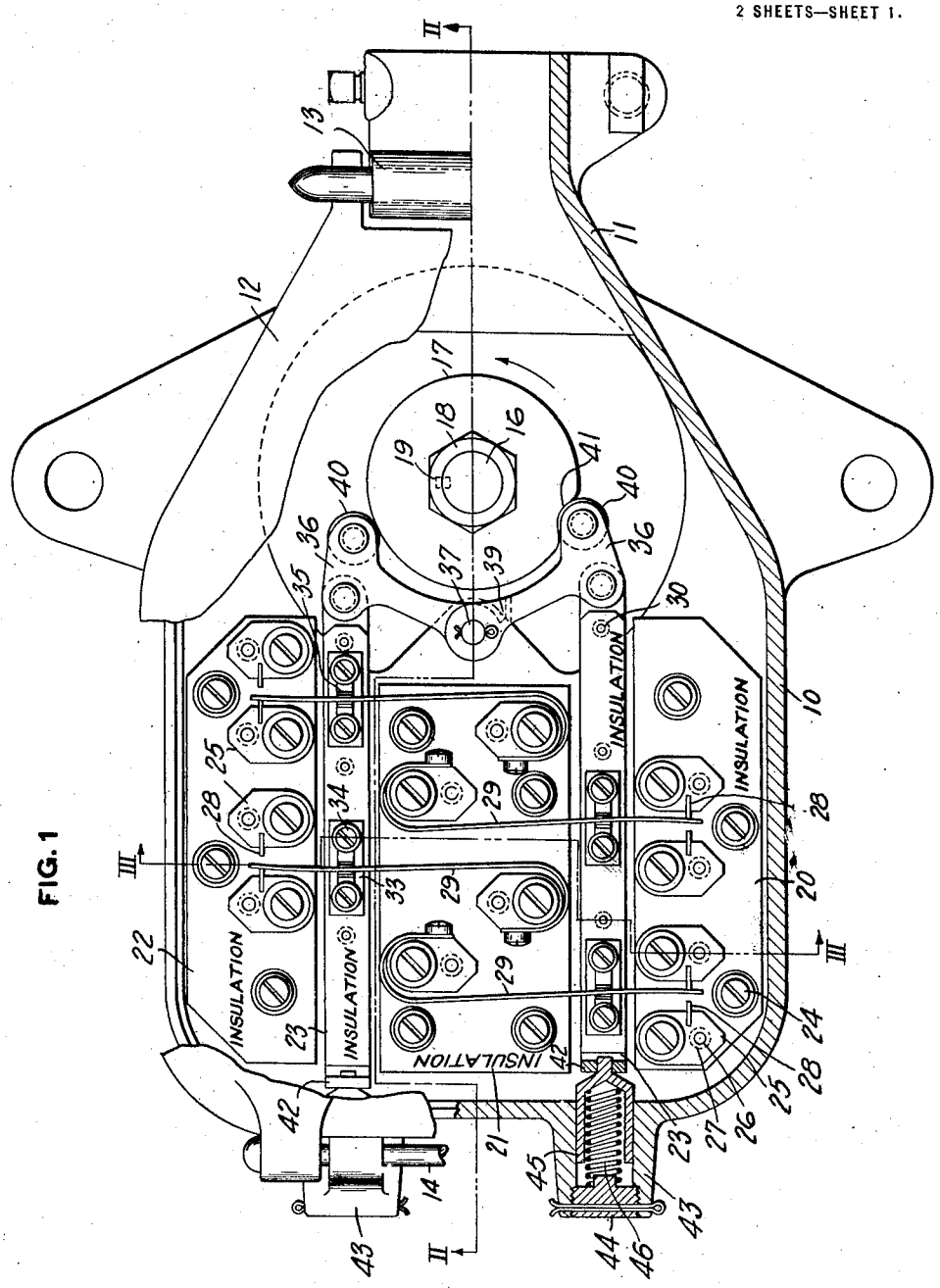

FIG. 1

WITNESSES

A. H. Wegner

Edwin L. Jones

INVENTOR

John P. Coleman

by A. L. Vencill

His Attorney

J. P. COLEMAN.

CIRCUIT CONTROLLER.

APPLICATION FILED SEPT. 19, 1916.

1,321,809.

Patented Nov. 18, 1919.

2 SHEETS—SHEET 2.

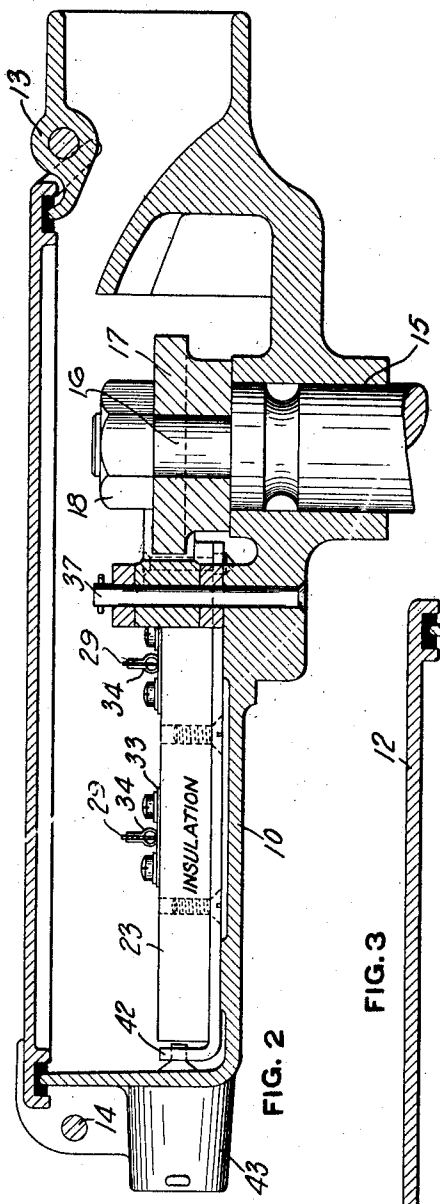

FIG. 2

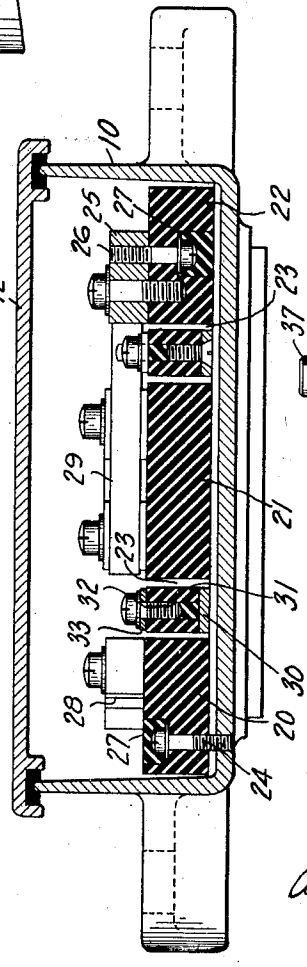

FIG. 3

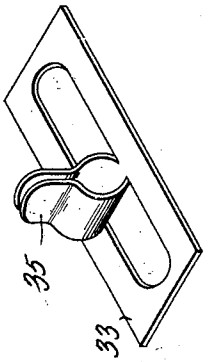

FIG. 5

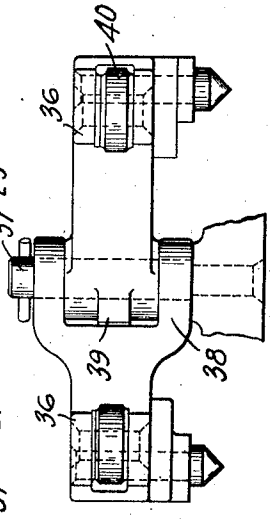

FIG. 4

WITNESSES

C. H. Wegner.

Edwin B. Jones

INVENTOR

John P. Coleman

by A. S. Pencill

His Attorney

UNITED STATES PATENT OFFICE.

JOHN P. COLEMAN, OF EDGEWOOD BOROUGH, PENNSYLVANIA, ASSIGNOR TO THE UNION SWITCH & SIGNAL COMPANY, OF SWISSVALE, PENNSYLVANIA, A CORPORATION OF PENNSYLVANIA.

CIRCUIT-CONTROLLER.

1,321,809. Specification of Letters Patent. Patented Nov. 18, 1919.

Original application filed May 18, 1915, Serial No. 28,840. Divided and this application filed September 19, 1916. Serial No. 120,958.

To all whom it may concern:

Be it known that I, JOHN P. COLEMAN, a citizen of the United States, residing at Edgewood borough, in the county of Allegheny and State of Pennsylvania, have invented certain new and useful Improvements in Circuit-Controllers, of which the following is a specification.

My invention relates to circuit controllers and contemplates the provision of a circuit closer, particularly designed for controlling a plurality of circuits, and is a divisional application of my co-pending application filed May 18, 1915, Serial No. 28,840.

The invention has for its chief characteristic the provision of a circuit controller having a plurality of movable contacts and means for simultaneously moving certain of the contacts to effect the opening and closing of a plurality of circuits.

Another characteristic of this invention resides in the provision of a device of this character having means associated with the movable contacts for insuring a positive actuation thereof and to securely hold the contacts in closed position.

A further characteristic is to provide a circuit controller comprising shiftable members upon which contacts are arranged whereby upon movement of the members, the contacts will be caused to engage terminals to control a plurality of circuits, the contacts being adjustably arranged to permit the proper engagement thereof with the terminals.

A still further characteristic is to provide a notched cam mechanism for actuating the shiftable members intermittently and at predetermined intervals to effect a shifting of certain of the contacts.

Other characteristics of the invention will appear as the specification is read in connection with the accompanying drawings, in which—

Figure 1 is a view, partly in section, showing one form of circuit controller embodying my invention, the cover of the casing being partly broken away.

Fig. 2 is a longitudinal sectional view on the line II—II of Fig. 1 and looking in the direction of the arrows.

Fig. 3 is a transverse section taken on the line III—III of Fig. 1, and looking in the direction of the arrows.

Fig. 4 is a detail view showing in side elevation the cranks and their connections shown in Fig. 1.

Fig. 5 is a view showing in perspective one of the clips shown in Fig. 1.

Similar reference characters refer to similar parts in each of the several views.

Referring to the drawings, reference character 10 designates a box, which has one end thereof tapered as at 11, the box being provided with a cover 12, which is hingedly connected to the tapered end 11 of the box as at 13, and which is adapted to be locked in closed position by means of a pin 14. The box 10 is provided on its underside with an opening 15 in which is journaled a shaft 16, the shaft extending into the box and having keyed thereto a cam 17. The cam is locked upon the shaft by means of a nut 18 and a key 19, whereby the shaft and cam may be readily removed to permit inspection of the box. The shaft 16 is, in this instance, the prime mover for actuating the circuit controller and may be attached to any suitable mechanism for imparting rotary or oscillatory movement to the cam 17. The shaft 16 and cam 17 are preferably arranged adjacent the tapered end 11 of the box, while arranged within the larger end of the box and upon the bottom wall thereof, are the terminal boards 20, 21 and 22. The terminal boards extend longitudinally of the box and are arranged in spaced relation to each other to provide longitudinally extending channels 23. The terminal boards are secured to the box by means of the countersunk screws 24, while arranged upon the upper side of the boards are the metallic blocks 25, the latter being also secured to the board by means of countersunk screws 26. All screw holes are, for the purpose of precaution against grounds, stopped up with insulating material 27. The blocks 25 are provided with binding screws or posts whereby wires may be attached thereto, the wires extending into the box at its smaller end. The blocks 25 upon each of the terminal boards 20 and 22 are arranged

in pairs, each of the pairs having their confronting sides formed with tips 28, the meeting ends of the tips being arranged in spaced relation to permit the movement of the contact fingers, as will be hereinafter described. The blocks 25 upon the terminal board 21 are arranged in substantially staggered relation and are each provided with the resilient fingers 29, which extend alternately in opposite directions and are of such a length as to have their free ends interposed between the confronting ends of their respective tips 28.

Slidably mounted within each of the channels 23, are the bars 30, each of which is provided with bars of insulating material 31, the insulating material being formed at spaced intervals with longitudinal extending slots 32, in each of which is adjustably mounted a clamp 33, I having in this instance employed the screws 34 to effect a longitudinal adjustment of the clamp. In Fig. 5, I have shown a detail perspective of one of the clamps 33, the same being formed from a single sheet of metal which is upstruck to provide the resilient lips 35.

The lips 35 of each of the clamps are adapted to receive the corresponding finger 29, the lips engaging the fingers intermediate their ends and serving to move the fingers when the bars 30 are moved longitudinally within the slots as will hereinafter be described. By adjustably mounting the clamps 33 within the slots 32, means are provided for adjusting the fingers 29 to insure the proper contacting thereof with the tips 28 as will be understood.

The inner ends of the bars are connected by means of the cranks 36, the bars being pivotally secured to the outer ends of the cranks as clearly shown in the drawings. The inner ends of the cranks 36 are pivotally connected to each other by means of the pin 37, the latter being mounted within the bottom wall of the box as is more clearly shown in Fig. 2 of the drawings. In this instance I have shown the inner ends of the cranks 36 connected by means of a knuckle 38, one portion of the knuckle being provided with lugs 39, whereby the inward angular motion of the cranks will be limited when moved by the bars 30, as will be hereinafter described. Journaled in the free ends of the cranks 36 are the rollers 40 which are adapted to engage the periphery of the cam 17. In this instance the periphery of the cam 17 is provided with an indentation 41 which is so disposed as to alternately receive the rollers 40 when the cam is oscillated or rotated.

To insure the proper actuation of the bars 30 under the action of the cam 17, the outer ends of each of the bars are provided with upturned portions 42, while the adjacent end of the box 10 is formed with cylinders 43, the outer ends of which are closed by means of the nut 44. Slidably mounted within each of the cylinders 43 is a sleeve 45 the inner end of which is closed and is rigidly connected to the adjacent upturned portion 42, while its outer end is open to receive the coil retractile spring 46. It will be evident from this construction that the spring 46 within each of the cylinders 43 exerts its tension to bias the respective bar 30 toward the cam 17. Under this action the rollers 40 will be caused to remain in contact with the periphery of the cam at all times, and when the cam is moved to cause one of the rollers to register with the indentation 41, the spring will force the respective bar to the right to cause the respective roller to remain within the indentation. Thus positive actuation of the bars to cause the shifting of the fingers is insured.

It will be manifest from the foregoing description that when the cam 17 is rotated or oscillated by means of the shaft 16, the indentation 41 will be caused to alternately receive the cam rollers 40. When this action takes place, the slide bar which has its respective roller disposed within the indentation is moved to the right by means of its respective spring whereby the respective fingers 29 carried thereby, will, by means of the clamps 33, be moved from the tips 28 upon one side of the fingers to the tips upon the opposite side, it being understood that the fingers are normally in engagement with the tips upon the left side of the fingers. When the cam 17 is further rotated to cause the previously mentioned roller to move out of the indentation 41, and to cause the remaining roller to move into the indentation, the bar mounted upon the latter roller will perform the same movement as that of the first bar, while the first bar having its respective roller moved out of its indentation will be moved rearwardly against the tension of the spring to move the respective fingers to their normal position. When the indentation 41 is so positioned as not to receive either of the rollers 40, it will be evident that both of the bars 30 will assume a retracted position so as to cause all of the fingers to engage the tips upon the left side of the fingers.

It will be evident from the preceding description that I have provided a common means for controlling a plurality of circuits and that the means and contacts are of such a character as to obtain various combinations of circuits to perform various characters of work.

It is thought from the foregoing taken in connection with the accompanying drawings that the construction and operation of this device will be apparent to those skilled in the art and that minor changes in size, shape, proportion, and minor details of con-

struction may be made without departing from the spirit and scope of the appended claims.

Having thus described my invention, what I claim is:

1. In combination, two contacts each biased to a normal position, a cam for controlling said contacts to cause operation of the contacts from an initial position wherein one contact is normal and the other reversed, through an intermediate position wherein both contacts are reversed to a final position wherein the first contact is reversed and the other contact is normal.

2. In combination, two contacts each biased to a normal position, a cam, means controlled by said cam for operating said contacts so that in one continuous movement of said cam said contacts are operated from an initial position wherein one contact is normal and the other reversed through an intermediate position wherein both contacts are reversed to a final position wherein the first contact is reversed and the second contact is normal.

3. A circuit controller comprising two bars mounted to reciprocate, means for biasing each bar in one direction, two pivotally mounted arms pivotally connected respectively with said bars, each arm having a cam-engaging member, a cam mounted to oscillate within limits for moving said bars in opposition to their bias, the periphery of said cam being circular except for an indentation, the angle of oscillation of said cam being such that the indentation moves from one cam-engaging member to the other, and contacts controlled by said bars.

4. A circuit controller comprising spring pressed bars mounted to reciprocate, circuit terminals arranged adjacent the bars, fingers adjustably connected with the bars, and means engageable with the bars for alternately reciprocating the bars to cause the said fingers to shift from certain of the terminals to the remaining terminals.

5. A circuit controller comprising two spring pressed bars mounted to reciprocate, circuit terminals arranged adjacent the bars, fingers controlled by the bars, rotary means engageable with the bars for alternately reciprocating the bars to cause the said fingers to shift from certain of the terminals to the remaining terminals.

6. A circuit controller comprising members mounted to reciprocate, a notched cam adjacent the members, pivoted means connected to the members and to each other and engageable with the cam to cause alternate movement of the members upon movement of said cam, and contacts controlled by said members.

7. A circuit controller comprising a box, terminal boards arranged within the box, and in spaced relation to each other to form channels, bars slidably mounted within each of the channels, biasing means engageable with one end of the bars, cranks connecting the opposite ends of the bars, means for limiting the inward angular movement of the cranks, and means engageable with the cranks for alternately moving the bars against the biasing means, and contacts controlled by said bars.

In testimony whereof I affix my signature in presence of two witnesses.

JOHN P. COLEMAN.

Witnesses:

A. HERMAN WEGNER,

R. UTNE.