Dec. 25, 1956 T. BENEDIKZ 2,775,344

EYEGLASS CLEANING COMPACT

Filed Aug. 7, 1953

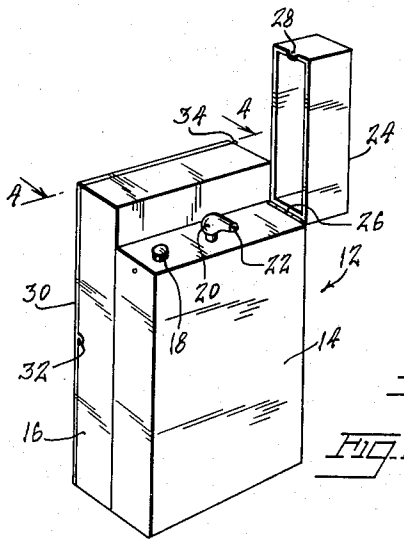

Fig. 1.

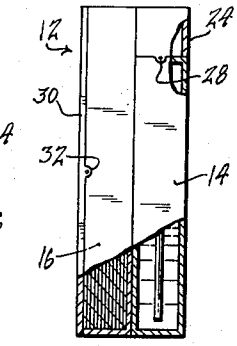

Fig. 2.

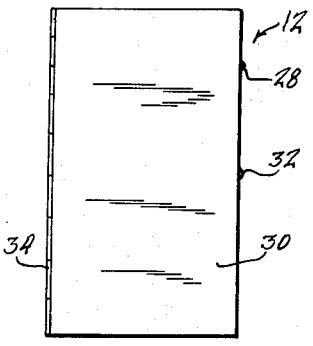

Fig. 3.

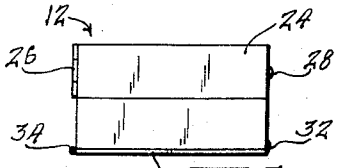

Fig. 5.

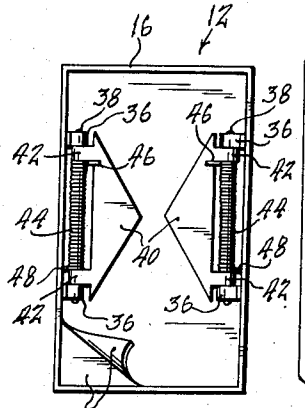

Fig. 4.

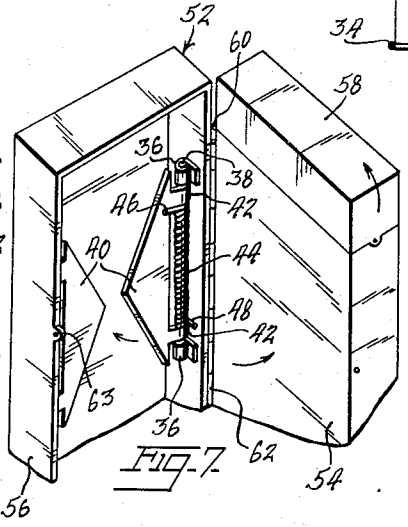

Fig. 7.

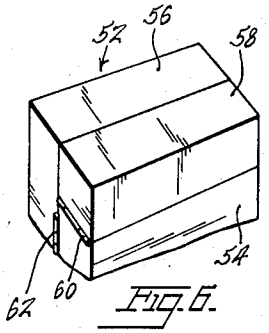

Fig. 6.

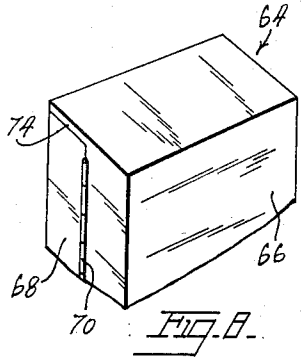

Fig. 8.

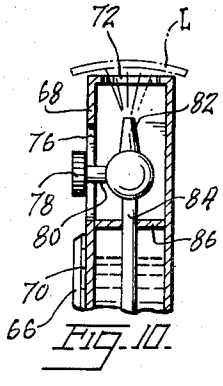

Fig. 10.

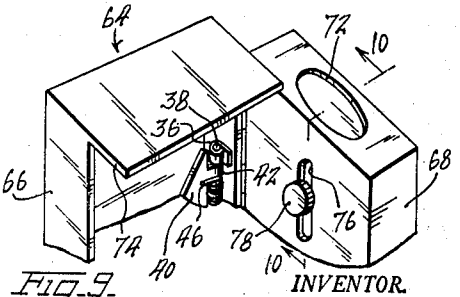

Fig. 9.

INVENTOR.
THOR BENEDIKZ
BY
ATTORNEY

United States Patent Office

2,775,344

Patented Dec. 25, 1956

2,775,344

EYEGLASS CLEANING COMPACT

Thor Benedikz, New York, N. Y.

Application August 7, 1953, Serial No. 372,888

2 Claims. (Cl. 206—38)

This invention relates to an eyeglass or spectacles cleaning compact, and, more particularly, has reference to a relatively small, unitary assembly capable of being readily carried in the pocket or in a purse, which assembly is so designed as to contain all the materials needed for cleaning and polishing the lenses of a pair of eyeglasses.

Those persons who wear eyeglasses experience considerable difficulty and inconvenience, in respect to the cleaning and polishing of the same. In many instances, such persons will carry a small cleaning rag in the eyeglass case, but this is unsatisfactory, since the piece of fabric will, on continued use over an indefinite period of time, become unsanitary, unattractive in appearance, and incapable of discharging its intended function with a desired amount of efficiency. Further, it is not possible to clean and polish eyeglasses with optimum efficiency unless a cleaning liquid is used, and this necessitates carrying a small bottle or like container on the person.

The main object of the present invention, in view of the above, is to provide, in a unitary assembly, a cleaning compact in which will be contained, in readily accessible locations, a supply of polishing tissues, a quantity of cleaning liquid, and a dispensing nozzle that will direct a jet or spray of liquid against an eyeglass lens, under the full control of a user.

Another object is to provide, in a structure as described, a highly attractive article that can be used in public without the embarrassment that would otherwise occur were one to expose a bottle of liquid, produce a soiled polishing rag, etc.

Another object of the present invention is to provide a pair of flat containers the interiors of which are wholly out of communication, which containers will be connected in side by side relation and will be of flat configuration, thus to permit the article to take up a minimum of space within a pocket or purse, the interior of one container defining a repository for a plurality of superposed, disposable, polishing tissues and the interior of the other container forming a liquid compartment which can be filled with water, or with a chemical cleaning compound.

Another object is to provide a means within the tissue container which will be particularly well adapted to confine the tissues within said container in a neat, orderly, stacked array, while at the same time providing access to the uppermost tissue for removal of the same without disturbing the remaining tissues.

Another object is to provide, in at least one form of the invention, an arrangement of the containers wherein the liquid container will be divided into a liquid compartment and a dispensing nozzle compartment, with said liquid container normally constituting a closure for the tissues container and the tissues container being in turn provided with a means that constitutes a closure for the dispensing nozzle compartment.

For further comprehension of the invention, and of the objects and advantages thereof, reference will be had to the following description and accompanying drawings, and to the appended claims in which the various novel features of the invention are more particularly set forth.

In the accompanying drawings forming a material part of this disclosure:

Fig. 1 is a perspective view of an eyeglass cleaning compact formed in accordance with the present invention, a hinged lid on the liquid container being shown in open position.

Fig. 2 is a front elevational view, taken from the left of Fig. 1, the lid being closed, portions being broken away.

Fig. 3 is a side elevational view taken from the left of Fig. 2.

Fig. 4 is a sectional view on line 4—4 of Fig. 1, showing the interior of the tissue container.

Fig. 5 is a top plan view.

Fig. 6 is an enlarged, fragmentary, rear perspective view showing a second form of the invention.

Fig. 7 is an enlarged, fragmentary, front perspective view of said second form in which the containers have been swung to an open position.

Fig. 8 is a view similar to Fig. 6, showing a third form of the invention.

Fig. 9 is a view similar to Fig. 7 of said third form.

Fig. 10 is a sectional view on line 10—10 of Fig. 9.

In the form of the invention shown in Figs. 1–5, the compact has been generally designated by the reference numeral 12, and includes flat, rectangular, upstanding containers 14, 16 for liquid and tissues, respectively, fixedly connected with their inner side walls contacting in face to face relation. The liquid cleaner container 14 is slightly reduced in height relative to the container 16 for polishing tissues, and in the downwardly offset upper end wall of said container 14, there is formed a filler opening in which is removably engaged a filler cap 18. Any suitable liquid cleaner, such as water or one of the conventional cleaning compounds used for glass, may be deposited within the container 14 through the filler opening, it being understood that the filler cap would preferably be knurled or otherwise exteriorly roughened to facilitate grasping of the same by a user, said cap further having threads engaging complementary threads provided in the opening of the liquid container.

Adjacent the filler opening, there is provided a dispensing nozzle assembly including a depressible button or lip 20 and a laterally projected nozzle 22. These would be a part of a conventional, downwardly shiftable plunger means of an atomizer device, of the type including inner and outer tubes and a ball on the end of the inner tube adapted to create a suction responsive to depression of the button or lip 20. The particular atomizer or spray device can be varied, of course, so long as a spray or jet is caused to issue from the nozzle on depression of the button. Since any of various dispensing means can be employed in association with the liquid container, it is not thought necessary to specifically illustrate and describe one such means herein.

A dependingly and peripherally flanged lid 24 is hingedly connected as at 26 to the upper end wall of the container 14, to swing about an axis extending transversely of said container between opposite extreme positions in one of which (see Fig. 2), it protectively overlies and conceals the filler cap and dispensing means, and in the other of which (Fig. 1), it exposes these parts for use. In its closed position, the lid is flush with the top wall of the tissues container, to provide a highly attractive, symmetrical article that can conveniently be carried in the pocket or in a purse.

A detent or latch means 28 is provided on the free end of the lid, cooperating with a complementary detent means on the container 14, for releasably engaging the lid in its closed position.

That side of the container 16 remote from its fixed connection to the container 14 is formed open, and is

provided with a closure 30 hinged to the body of container 16. Closure 30 is releasably locked in closed position by a detent 32, and is connected to the body of container 16 by a piano hinge 34 extending normally to the hinge of the lid 24. This permits the lid 24 and the closure 30 to be opened or closed independently of one another, during use of the device.

Within the container 16, there is provided a means for releasably engaging a plurality of superposed, disposable, polishing tissues. Said means has been shown to particular advantage in Fig. 4, and comprises, in the illustrated example of the invention, a pair of confronting, spring-biased leaves or fingers. More than one pair of fingers can be used, of course, and conversely, only one finger or leaf might be employed in a commercial embodiment of the invention.

Each finger or leaf assembly includes a pair of coaxial, spaced hinge brackets 36 affixed to the inner surface of the front or rear wall, as the case may be, of the container 16. A hinge pin 38 has its ends engaged in the brackets 36, and swingably mounted on the pin is a flat finger or leaf 40 of metal, plastic, or any other suitable material. Leaf 40 is preferably triangular and has a base on which are integrally formed, at spaced locations upon the base, hinge sleeves 42 abutting against the respective brackets in the space between the brackets. The hinge pin extends through the sleeves to swingably mount the hold-down finger 40, and coiled about the mid length portion of the pin, in the space between the sleeves 42, is a spring 44 one end 46 of which engages against the finger, and the other end 48 of which engages against the adjacent wall of the container 16. The spring is so tensioned as to exert pressure against the hold-down finger tending to bias the same in the direction of the inner side wall of the container 16. As a result, the hold-down fingers 40 cooperate with the inner side wall of the container 16 in confining a stack of superposed, rectangular, disposable tissues 50 within the container 16. The arrangement will, of course, permit the outermost tissue to be readily grasped and removed, without disturbing the remaining tissues.

In Figs. 6 and 7, there is shown a second form of the invention, in which the compact 52 includes hingedly connected liquid and tissue containers 54, 56, respectively. In this form of the invention, the closure 30 is eliminated, since the liquid container serves in its stead, in a manner to be made presently apparent.

The container 54 is provided, at its upper end, with a lid 58 hinged to the container body at 60, and otherwise formed and arranged like the lid 24 of the first form. It will be understood that said lid 58 will serve to protectively enclose a filler cap and a dispensing means, also formed and arranged like the corresponding components illustrated in Fig. 1 at 18, 20 and 22.

The container 56 is formed open at the inner side thereof, and along one edge of said inner side is connected by a piano hinge 62 to the adjacent edge of the container 54. The arrangement produces the desirable result of utilization of the container 54 as the closure for the tissue container. A detent means 63 on the container 56 cooperates with a complementary detent means on the container 54 in releasably engaging the containers in their inwardly swung position, when the device is not in use. A hold-down means such as that previously shown and described would, of course, be provided within the tissue container, and is arranged to exert pressure against the tissues in the direction of the permanently closed outer side wall of said tissue container.

In Figs. 8–10, there is shown a third form of the invention designated generally at 64 and including a tissue container 66 hingedly connected to a liquid container 68 by a piano hinge 70, this arrangement being the same as that shown in Figs. 6 and 7. Integrally provided on the upper end of the tissue container is a lid for the liquid container, said lid being adapted to cover a large opening 72 formed in the upper end of the liquid container. The lid has been designated by the reference numeral 74, and is formed as a flat plate projecting laterally from and constituting an extension of the upper end wall of the tissue container. Plate 74, when the containers are swung apart as in Fig. 9, exposes the opening 72 for disposition of the lens L of a pair of eyeglasses immediately thereabove, in the manner shown in Fig. 10.

Formed in the inner side wall of the liquid container, so as to be effectively concealed when the containers are swung to closed position, is a vertically extending slot 76 in which is positioned the shank of a manually shiftable button 78. The shank is rigid with the button and has been designated by the reference numeral 80, said shank extending inwardly to the body of a dispensing assembly of the atomizer type, including an upwardly extending dispensing nozzle 82 and a plunger 84 extending through an opening formed in a transverse partition 86 provided in the liquid container. Partition 86 is disposed adjacent the upper end wall of the liquid container, and divides the container into a liquid compartment and a dispensing nozzle compartment.

In use of the form of the invention shown in Figs. 8–10, one would first swing the containers apart. This exposes the apertured lens seat at the upper end of the dispensing nozzle compartment, simultaneously with exposure of the buttons 78 to permit shifting thereof toward the lower end of the slot. With the lens L positioned as shown in Fig. 10, the shifting of the button will cause a spray or jet of cleaning liquid to be directed against the lens through the opening 72. Thereafter, a tissue can be removed from the exposed interior of the tissue compartment to permit polishing of the eyeglasses.

The entire device can, as will be appreciated, be made of any of various materials, such as metal, plastic, or glass, and can be made in a small size so as to occupy no more space than is ordinarily required by a cigarette case in one's pocket or purse.

While I have illustrated and described the preferred embodiments of my invention, it is to be understood that I do not limit myself to the precise constructions herein disclosed and the right is reserved to all changes and modifications coming within the scope of the invention as defined in the appended claims.

Having thus described my invention, what I claim as new, and desire to secure by United States Letters Patent is:

1. An eyeglass cleaning compact comprising a rectangular-shaped container with cleaning tissues therein having top, bottom, front and rear walls and one side wall and being open at the other side, mechanism in said container for releasably holding cleaning tissues therein, a container of similar shape for holding cleaning liquid hingedly connected to said tissue holding container along one long edge thereof, said liquid container having top, bottom, front, rear and side walls, the side wall adjacent the tissue container serving as a closure for the open side of said tissue container when the containers are juxtaposed, the top wall of said liquid container having an opening therein for removably receiving an eyeglass lens to be cleaned seated on said top wall, means in said liquid container for spraying liquid through said opening onto the lens seated thereover, and an integral laterally extending plate on the top wall of the tissue container adapted to overlie the top wall of the liquid container when the containers are in juxtaposed relation.

2. An eyeglass cleaning compact comprising a rectangular-shaped container with cleaning tissues therein having top, bottom, front and rear walls and one side wall being open at the other side, mechanism in said container for releasably holding cleaning tissues therein, a container of similar shape for holding cleaning liquid hingedly connected to said tissue holding container along one long edge thereof, said liquid container having top,

bottom, front, rear and side walls, the side wall adjacent the tissue container serving as a closure for the open side of said tissue container when the containers are juxtaposed, the top wall of said liquid container having an opening therein for removably receiving an eyeglass lens to be cleaned seated on said top wall, and means in said liquid container for spraying liquid through said opening onto the lens seated thereover, the mechanism for releasably holding cleaning tissues comprising opposed spring-pressed hinged plates secured to the front and rear walls of the tissue holding container, said liquid spraying means including a compressible bulbous body with a spray nozzle directed toward said opening and a slidable button-actuated device for compressing said bulbous body.

References Cited in the file of this patent

UNITED STATES PATENTS

275,997	Chapelain	Apr. 17, 1883
1,436,617	Warren	Nov. 21, 1922
1,606,811	Schilke	Nov. 16, 1926
1,709,502	Udall	Apr. 16, 1929
2,009,180	Johnson	July 23, 1935
2,272,943	Healy	Feb. 10, 1942
2,411,310	Wilkins	Nov. 19, 1946
2,572,863	Jaap	Oct. 30, 1951
2,607,627	Gregg et al.	Aug. 19, 1952
2,672,232	Kessell	Mar. 16, 1954