(12) INTERNATIONAL APPLICATION PUBLISHED UNDER THE PATENT COOPERATION TREATY (PCT)

(19) World Intellectual Property Organization
International Bureau

(43) International Publication Date
9 June 2016 (09.06.2016)

WIPO | PCT

(10) International Publication Number
WO 2016/089999 Al

(51) International Patent Classification:
F21S 8/02 (2006.01) *F21 V29/502* (2015.01)
F21 V19/00 (2006.01) *F21Y 105/12* (201 6.01)
F21 V21/04 (2006.01) *F21Y 101/00* (201 6.01)

(21) International Application Number:
PCT/US20 15/06343 1

(22) International Filing Date:
2 December 2015 (02.12.2015)

(25) Filing Language: English

(26) Publication Language: English

(30) Priority Data:
62/086,521 2 December 2014 (02. 12.2014) US

(71) Applicant: **LIGHTING SCIENCE GROUP, CORPORATION** [US/US]; 1830 Penn Street, Melbourne, Florida 32901 (US).

(72) Inventors: **BOOMGAARDEN, Mark;** 345 Lynn Avenue, Satellite Beach, Florida 32937 (US). **LECLAIR, Richard;** Apartment IB, 675 Rosewood Court, Indian Harbour Beach, Florida 32937 (US). **JIANG, Yong;** E271, 50 Berkeley Street, Satellite Beach, Florida 32937 (US).

(74) Agent: **MALEK, Mark;** Ste. 201, 1990 West New Haven Avenue, Melbourne, Florida 32904 (US).

(81) Designated States *(unless otherwise indicated, for every kind of national protection available):* AE, AG, AL, AM, AO, AT, AU, AZ, BA, BB, BG, BH, BN, BR, BW, BY, BZ, CA, CH, CL, CN, CO, CR, CU, CZ, DE, DK, DM, DO, DZ, EC, EE, EG, ES, FI, GB, GD, GE, GH, GM, GT, HN, HR, HU, ID, IL, IN, IR, IS, JP, KE, KG, KN, KP, KR, KZ, LA, LC, LK, LR, LS, LU, LY, MA, MD, ME, MG, MK, MN, MW, MX, MY, MZ, NA, NG, NI, NO, NZ, OM, PA, PE, PG, PH, PL, PT, QA, RO, RS, RU, RW, SA, SC, SD, SE, SG, SK, SL, SM, ST, SV, SY, TH, TJ, TM, TN, TR, TT, TZ, UA, UG, US, UZ, VC, VN, ZA, ZM, ZW.

(84) Designated States *(unless otherwise indicated, for every kind of regional protection available):* ARIPO (BW, GH, GM, KE, LR, LS, MW, MZ, NA, RW, SD, SL, ST, SZ, TZ, UG, ZM, ZW), Eurasian (AM, AZ, BY, KG, KZ, RU, TJ, TM), European (AL, AT, BE, BG, CH, CY, CZ, DE, DK, EE, ES, FI, FR, GB, GR, HR, HU, IE, IS, IT, LT, LU, LV, MC, MK, MT, NL, NO, PL, PT, RO, RS, SE, SI, SK, SM, TR), OAPI (BF, BJ, CF, CG, CI, CM, GA, GN, GQ, GW, KM, ML, MR, NE, SN, TD, TG).

Declarations under Rule 4.17:

— *as to applicant's entitlement to apply for and be granted a patent (Rule 4.1 7(H))*

Published:

— *with international search report (Art. 21(3))*

(54) Title: LOW-PROFILE LIGHTING DEVICE AND ATTACHMENT MEMBERS AND KIT COMPRISING SAME

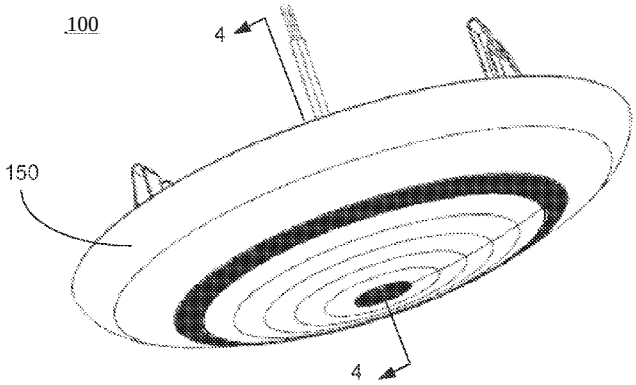

FIG. 1

(57) Abstract: A luminaire (100) comprising a housing (110) formed of thermally conductive polymer with an optic (140) carried thereby, a trim (150) carried by the optic (140), and a light source (130). The light source (130) may comprise an LED board comprising a copper layer and a plurality of light emitting diodes (LEDs) (131) disposed on the LED board (132). The luminaire (100) may also comprise control circuitry (136) operably coupled to the plurality of LEDs (131), wherein the LED board is positioned in thermal communication with the housing (110). The luminaire (100) may further comprise a mounting member configured to be attached to each of the housing (110) and an external structure. The control circuitry (136) may be configured to operate the plurality of LEDs (131) such that heat generated by the plurality of LEDs (131) is dissipated by the copper layer of the LED board.

WO 2016/089999 A1

LOW-PROFILE LIGHTING DEVICE AND ATTACHMENT MEMBERS AND KIT COMPRISING SAME

Field of the Invention

[0001] The present invention relates to systems for a low-profile lighting device and kits comprising the same.

Background of the Invention

[0002] Digital lighting technologies such as light-emitting diodes (LEDs) offer significant advantages over incandescent and fluorescent lamps. These advantages include, but are not limited to, better lighting quality, longer operating life, and lower energy consumption. LEDs also are being designed to have more desirable color temperatures than traditional lamps.

[0003] A number of design challenges and costs are associated with replacing traditional lamps with LED illumination devices. These design challenges include thermal management, installation ease, and manufacturing cost control.

[0004] Thermal management describes a system's ability to draw heat away from an LED. Lighting technology that employs LEDs suffers shortened lamp and fixture life and decreased performance when operating in high-heat environments. Moreover, when operating in a space-limited enclosure, such as a can light fixture, for example, the heat generated by an LED and its attending circuitry itself can cause damage to the LED. Passive cooling technology, such as a heat sink thermally coupled to a digital device, may be used to transfer heat from a solid material to a fluid medium such as, for example, air. One of the challenges in using a heat sink, however, is that of absorbing and dissipating heat at a sufficient rate with respect to the amount of heat being generated by the LED. If the heat sink does not have the optimal amount of capacity, the heat can gradually build up behind the LED and cause damage to the components.

[0005] Compared to incandescent and fluorescent lamps, LED-based lighting solutions have relatively high manufacturing and component costs. These costs are often compounded by a need to replace or reconfigure a light fixture that is designed to support incandescent or fluorescent lamps to instead support LEDs. Consequently, the cost of adoption of digital lighting technology, particularly in the consumer household market, is driven by design choices for retrofit LED-based lamps that impact both cost of manufacture and ease of installation.

[0006] Much of the heat generated by LEDs comes out the back of the lamp itself. Consequently, many lamp designs feature heat sinks with fins extending toward the back of a lamp. However, these designs suffer from unfavorable heat dissipation characteristics when used in a space-limited environment such as a can light fixture.

[0007] Accordingly, there is a need in the art for an LED-based lighting system that is not cost prohibitive to manufacture that effectively manages heat without a heat sink.

[0008] This background information is provided to reveal information believed by the applicant to be of possible relevance to the present invention. No admission is necessarily intended, nor should be construed, that any of the preceding information constitutes prior art against the present invention.

Summary of the Invention

[0009] In view of the foregoing, it is therefore an object of the present invention to provide an improved LED-based lamp for use in a space limited lamp enclosure, such as a can light fixture. The embodiments of the present invention are related to a heat efficient low-profile lighting device, attachment members and kit.

[0010] The present invention is a luminaire comprising a housing formed of thermally conductive polymer with an optic carried thereby, a trim carried by the optic and a light source. The light source may comprise an LED board comprising a copper layer and a plurality of light emitting diodes (LEDs) disposed on the LED. The device may also comprise control circuitry operably coupled to the plurality of LEDs, wherein the LED board is positioned in thermal communication with the housing. The device may further comprise a mounting member configured to be attached to each of the housing and an external structure. The control circuitry may be configured to operate the plurality of LEDs such that heat generated by the plurality of LEDs is dissipated by the copper layer of the LED board.

[001 1] The luminaire may further comprise a power circuit positioned in electrical communication with the light source and configured to receive electrical power from a power source. The luminaire may condition the electrical power for use by the light source and deliver the conditioned electrical power to the light source.

[0012] In some embodiments, the luminaire further includes a housing composed of polycarbonate 5VA flame rated material. Furthermore, the control circuitry may be configured to reduce the thermal energy produced by the plurality of LEDs by reducing the duty cycle of one or more of the LEDs. Additionally, the control circuitry may comprise electronic components necessary for controlling the operation of the light source, comprising a microcontroller, a memory, and connections configured to enable the operation of individual LEDs or subsets of LEDs.

[001 3] The luminaire may further comprise a plurality of pillars configured to attach the power circuit to the light source circuit board and space the power circuit apart from the light source. The plurality of pillars may be formed of a material having a low rate of thermal conductivity and may be attached to the power circuit and configured so as to be carried by the light source.

[0014] The lighting device may also contain an optic positioned in communication with the light source and configured to alter light passing through the light source by diffusing light passing therethrough and structuring the emitted light to appear uniform in brightness, color, color temperature, and CRI.

[0015] In some embodiments, the luminaire may comprise a gasket positioned between the optic and the housing. Furthermore, the trim may be configured to be carried by the housing so as to overlie the optic perimeter.

[0016] The mounting member may comprise a plate mounting member comprising a base member with a medially located aperture. The plate mounting member may be configured to be attached to the external structure and may be configured to attach to the luminaire by the positioning of at least part of the luminaire within the medially located aperture. The mounting member may also include hook mounting members attachable to the luminaire housing and configured to engage the external structure. Furthermore, the mounting member may be comprised of spring mounting members that include rotatable arms. The spring mounting members may be attachable to the luminaire housing and configured so as to engage the external structure.

[0017] Additionally, the base member may comprise one or more attachment features configured to facilitate the attachment of the plate mounting member to the external structure. The base member may also comprise one or more projection members positioned adjacent to the medially located aperture so as to attach to a structure of the luminaire that extends through the medially located aperture.

[0018] In some embodiments, the housing may comprise a distal cavity comprising one or more projections. The projection members may comprise one or more bends configured to conform, interface, and interlock with the projections of the distal cavity.

Brief Description of the Drawings

[0019] FIG. 1 is a lower perspective view of a luminaire according to an embodiment of the invention.

[0020] FIG. 2 is an upper perspective view of the luminaire of FIG. 1.

[0021] FIG. 3 is an exploded perspective exploded view of the luminaire of FIG. 1.

[0022] FIG. 4 is a cross sectional perspective sectional view of the luminaire of FIG. 1 and taken through line 4-4.

[0023] FIG. 5 is a photograph showing a perspective view of a luminaire according to an embodiment of the invention positioned for attachment to a light fixture canister.

[0024] FIG. 6 is a photograph showing a perspective cross sectional view of the luminaire of FIG. 5 after attachment to the light fixture canister.

[0025] FIG. 7 is a photograph showing a perspective view of a luminaire according to an embodiment of the invention positioned for attachment to a light fixture canister after the attachment of a mounting plate to the light fixture canister.

[0026] FIG. 8 is a photograph showing a perspective cross sectional view of the luminaire, mounting plate, and light fixture canister of FIG. 7.

[0027] FIG. 9 is a perspective cross sectional view of the luminaire as attached to the mounting plate.

[0028] FIG. 10 is a rear perspective view of a luminaire according to an embodiment of the invention after attachment to a ceiling structure.

Detailed Description of the Invention

[0029] The present invention will now be described more fully hereinafter with reference to the accompanying drawings, in which preferred embodiments of the invention are shown. This invention may, however, be embodied in many different forms and should not be construed as limited to the embodiments set forth herein. Rather, these embodiments are provided so that this disclosure will be thorough and complete, and will fully convey the scope of the invention to those skilled in the art. Those of ordinary skill in

the art realize that the following descriptions of the embodiments of the present invention are illustrative and are not intended to be limiting in any way. Other embodiments of the present invention will readily suggest themselves to such skilled persons having the benefit of this disclosure. Like numbers refer to like elements throughout.

[0030] Although the following detailed description contains many specifics for the purposes of illustration, anyone of ordinary skill in the art will appreciate that many variations and alterations to the following details are within the scope of the invention. Accordingly, the following embodiments of the invention are set forth without any loss of generality to, and without imposing limitations upon, the invention.

[0031] In this detailed description of the present invention, a person skilled in the art should note that directional terms, such as "above," "below," "upper," "lower," and other like terms are used for the convenience of the reader in reference to the drawings. Also, a person skilled in the art should notice this description may contain other terminology to convey position, orientation, and direction without departing from the principles of the present invention.

[0032] Furthermore, in this detailed description, a person skilled in the art should note that quantitative qualifying terms such as "generally," "substantially," "mostly," and other terms are used, in general, to mean that the referred to object, characteristic, or quality constitutes a majority of the subject of the reference. The meaning of any of these terms is dependent upon the context within which it is used, and the meaning may be expressly modified.

[0033] An embodiment of the invention text, as shown and described by the various figures and accompanying text, provides a low profile downlight, more generally referred to as a luminaire. The luminaire may comprise an LED light source comprising an LED board. The LED board may comprise at least one layer of copper that may be configured to dissipate thermal energy generated by the LED light source. Some embodiments of the luminaire may advantageously omit a discrete heat spreading structure, such as a heat sink. Furthermore, the LED light source may be configured to operate so as to produce light of acceptable characteristics, such as brightness, color, color temperature, and color rendering index (CRI) while maintaining a thermal equilibrium of components of the luminaire within a temperature range that will have either little or no negative effects on the operation and/or the operational longevity of the luminaire. Furthermore, the luminaire may be configured to cooperate with various attachment mechanisms to facilitate the attachment of the luminaire to typical light fixture hardware.

[0034] Referring now to FIGS 1-4, a luminaire 100 according to an embodiment of the present invention will now be discussed. The luminaire 100 may comprise a housing 110, a power circuit 120, a light source 130, an optic 140, and a trim 150. The housing 110 may be configured to carry, either directly or indirectly, the other elements comprised by the luminaire 100. In some embodiments, the housing 110 may be configured to facilitate the attachment of any of the control circuitry 136, the light source 130, the optic 140, and the trim 150 thereto.

[0035] In the present embodiment, the housing 110 may comprise a base plate 111, a first raised section 112, a second raised section 113, an interior section 114, and an aperture 115 defined by the interior section 114. The various elements of the housing 110 may be configured to facilitate the accommodation and/or attachment of other components of the luminaire 100. For example, the housing 110 may comprise a plurality of fastening apertures 116 configured to permit fastening devices to pass therethrough so as to fasten other components of the luminaire 100 to the housing 110. More specifically, the housing 110 may comprise a first plurality of apertures 116' to facilitate the attachment of the trim 150 thereto. Furthermore, the housing 110 may comprise a second plurality of apertures 116" to facilitate the attachment of a mounting member thereto. Additional details regarding the various embodiments of the mounting member will be provided hereinbelow. In the present embodiment, the fasteners may be screws. Any type of fastener as is known in the art is contemplated and included within the scope of the invention. Additionally, in the present embodiment, the housing 110 may comprise a plurality of clasps 117 configured to receive a section of the light source 130, thereby carrying the light source 130 and preventing or inhibiting motion of the light source 130 relative to the housing 110. Furthermore, alternative means and methods of attaching the other components of the luminaire 100 to the housing 110 are contemplated and included within the scope of the invention, including, but not limited to, use of adhesives and glues, welding, interference fits, magnetic coupling, and the like.

[0036] Furthermore, the second raised section 113 may be configured to receive a gasket member to facilitate the creation of a water-resistant chamber. More specifically, the second raised section 113 may comprise a recess 118 configured to receive a gasket member 170 further comprised by the luminaire 100. The gasket member 170 may be positioned so as to conform to the geometry of the second raised section 113, fitting within the recess 118 and thereby inhibiting motion of the gasket member 170 relative to the housing 110. Furthermore, the gasket member 170 may be configured to be compressed, thereby forming a seal between itself, the second raised section 113, and the member

which is adapted to compress the gasket member 170. In some embodiments, the gasket member 170, the housing 110, and the optic 140 may cooperate to establish a water resistant chamber. In such embodiments, the optic 140 may be configured so as to be positionable to compress the gasket member 170 against the second section 113.

[0037] Additionally, the housing 110 may further comprise a distal cavity 119. The distal cavity 119 may be configured to extend from the base plate 111 in a direction generally opposite the direction the first and second raised sections 112, 113 extend from the base plate 111. Furthermore, the distal cavity 119 may be dimensioned so as to permit the power circuit 120 to be positioned therewithin. Additionally, the distal cavity 119 may be configured to have one or more projections 119' extending radially outward from the distal cavity 119 to facilitate the attachment of a mounting member, as will be described in greater detail hereinbelow.

[0038] Additional details regarding the power circuit 120 and the light source 130 will now be provided. The power circuit 120 may be positioned in electrical communication with the light source 130. Furthermore, the power circuit 120 may be configured to receive electrical power from a power source, condition the electrical power for use by the light source 130, and deliver the conditioned electrical power to the light source 130. Conditioning may include AC-DC conversion, DC-DC voltage adjustment, and the like.

[0039] In some embodiments, the light source 130 may comprise one or more light-emitting devices 131 . The light-emitting devices 131 may be any type of light-emitting devices as is known in the art, including, but not limited to, incandescent devices, halogen devices, fluorescent devices, high-intensity discharge devices, and light-emitting semiconductor devices, such as light-emitting diodes (LEDs). In the present embodiment, the light source 130 comprises a plurality of LEDs 131 .

[0040] The LEDs 131 may be configured to be operated to produce light of predetermined characteristics, such as brightness, color, color temperature, CRI, or to have a selected spectral power distribution. Moreover, the plurality of LEDs 131 may comprise LEDs configured to emit light having differing characteristics from another LED of the plurality of LEDs 131 .

[0041] Furthermore, the light source 130 may comprise control circuitry 136. The control circuitry 136 may be operably coupled to the plurality of LEDs 131 so as to control the operation of each LED of the plurality of LEDs 131, or subsets of the plurality of LEDs 131, so as to vary the characteristics of light emitted thereby, resulting in the variance of characteristics of light emitted by the luminaire 100. Furthermore, the light source 130 may comprise a circuit board 132. Each of the plurality of LEDs 131 and the control

circuitry 136 may be carried by the circuit board 132, and positioned in electrical and thermal communication therewith. The circuit board 132 may be configured to enable the individual operation of each LED of the plurality of LEDs 131 by the control circuitry 136, or subsets thereof.

[0042] Furthermore, the circuit board 132 may be configured to facilitate the attachment of the light source 130 to the housing 110. More specifically, the circuit board 132 may comprise one or more cut-outs 133 along a periphery of the circuit board 132 and one or more attaching sections 134 intermediate the cut-outs 133 along the periphery of the circuit board 132. The cut-outs 133 may be configured to have sufficient dimensions and positioned along the periphery of the circuit board 132 to accommodate the positioning of the clasps 117 of the housing 110 therein. Furthermore, the attachment sections 134 may be configured to couple to the clasps 117 so as to removably attach the circuit board 132 to the clasps 117, thereby enabling the light source 130 to be carried by the housing 110.

[0043] The control circuitry 136 may be configured to control the operation of the plurality of LEDs 131 so as to achieve a thermal equilibrium as described hereinabove. In some embodiments, the control circuitry 136 may be configured to reduce the thermal energy produced by the plurality of LEDs 131 by any means or method known in the art, including reducing the duty cycle of one or more of the LEDs of the plurality of LEDs 131, or by underdriving one or more of the LEDs of the plurality of LEDs 131, e.g. providing less current to an LED than the LED is rated to conduct. Such operation may also enable the control circuitry 136 to reduce the intensity of light emitted by the luminaire 100 responsive to an input indicating the instruction of accomplishing the same.

[0044] In some embodiments, the control circuitry 136 may comprise electronic components necessary for controlling the operation of the light source 130, including, but not limited to, a microcontroller, a memory, including volatile and/or non-volatile memory, connections to the light source 130 enabling operation of each individual LED of the plurality of LEDs 131, or subsets thereof, and connections for receiving electrical power from the power circuit 120.

[0045] In some embodiments, the power circuit 120 may be carried by the light source 130. In the present embodiment, the luminaire 100 may further comprise a plurality of pillars 160. The plurality of pillars 160 may be configured to attach the power circuit 120 to the light source 130, specifically to the circuit board 132 of the light source 130. In such embodiments, the circuit board 132 may comprise a plurality of pillar apertures 135 configured to receive and permit positioning therewithin of an end of the plurality of pillars

160. Furthermore, the end of the plurality of pillars 160 that are configured to attached to the circuit board 132 may be configured to, when passed through the pillar apertures 135, deflect inward and subsequently outward so as to attach to the circuit board 132. Similarly, the power circuit 120 may comprise a power circuit board 122 comprising a plurality of pillar apertures 124 configured similarly to the plurality of pillar apertures 135 of the circuit board 132, being configured to receive and permit positioning therewithin of another end of the plurality of pillars 160. That end of the plurality of pillars 160 may similarly be configured to, when passed through the pillar apertures 124, deflect inward and subsequently outward so as to attach to the power circuit board 122. Accordingly, when the plurality of pillars 160 are attached to each of the circuit board 132 and the power circuit board 122, the power circuit 132 may be carried by the light source 130. In some embodiments, the plurality of pillars 160 may be positioned so as to space the power circuit 120 apart from the light source 130. Furthermore, the plurality of pillars 160 may be formed of a material having a low rate of thermal conductivity, thereby inhibiting the flow of heat from the power circuit 120 to the light source 130.

[0046] The optic 140 may be an optical device configured to be positioned in optical communication with the light source 130. In some embodiments, the optic 140 may be configured to alter light passing therethrough, so as to alter light emitted by the luminaire 100. In some embodiments, the optic 140 may be configured to alter the distribution of light passing therethrough, including, but not limited to, diffusing, collimating, reflecting, refracting, or focusing light. In the present embodiment, the optic 140 may be configured to diffuse light passing therethrough such that an observer of light emitted by the luminaire 100 may not be able to distinguish light as being emitted from a plurality of light-emitting devices, instead having the appearance having a generally uniform distributions in terms of at least one of brightness, color, color temperature, and CRI.

[0047] Furthermore, the optic 140 may be configured to cooperate with the housing 110 and the gasket member 170 so as to define a water-resistant chamber. More specifically, the optic 140 may be configured so as to be positionable adjacent to the second raised section 113 of the housing 110 so as to compress the gasket member 170 therebetween, establishing a water-resistant seal. Accordingly, the optic 140 may be configured to have a shape conforming to the shape of the second raised section 113. In the present embodiment, each of the optic 140 and the second raised section 113 may be generally circular. Accordingly, the gasket member 170 may be similarly circular, commonly referred to as an o-ring.

[0048] The trim 150 may be configured to be attached to and carried by the housing 110. Furthermore, the trim 150 may be configured to be carried by the housing 110 so as to overlie a perimeter of the optic 140. Additionally, the positioning of the trim 150 may shield the attachment of the optic 140 to the housing 110, as well as the seal formed between the optic 140, the gasket member 170, and the second raised section 113, from environmental factors. In some embodiments, the trim 150 may comprise a plurality of fastener receiving sections 152 configured to engage with a fastener passing through an aperture 116' of the housing 110, thereby attaching the trim 150 to the housing 110.

[0049] In the present embodiment, each of the housing 110, the optic 140, and the trim 150 may be fabricated from a variety of materials. Advantageously, each of the housing 110, the optic 140, and the trim 150 may be fabricated from a material having relatively poor thermal conductivity characteristics, such as metals, metal alloys, thermally conductive polymers, thermally conductive ceramics, and the like. In the present embodiment, each of the housing 110, the optic 140, and the trim 150 may be fabricated from a polymer, such as polycarbonate. More specifically, each may be fabricated of 5VA flame rated polycarbonate.

[0050] In some embodiments of the invention, one or more mounting members may be included with the luminaire 100. In some embodiments, a single mounting member may be comprised by a luminaire 100. In some embodiments, the invention may be a kit comprising a luminaire 100 and one or more mounting members of varying types. Various embodiments of mounting members included with the invention will now be discussed.

[0051] A first type of mounting member is a plate mounting member 200. The plate mounting member 200 may be configured to be attached to a structure of the luminaire 100 as well as to an external structure to facilitate the attachment of the luminaire 100 to the external structure. The plate mounting member 200 may comprise a base member 210 and a plurality of projection members 220 extending from the base member 210. The base member 210 may comprise an aperture 212. The aperture 212 may be configured to permit a structure of the luminaire 100 to be positioned at least partially therein and pass therethrough. In the present embodiment, the aperture 212 may be configured to permit the distal cavity 119 to pass therethrough.

[0052] Additionally, the base member 210 may comprise one or more attachment features 214 configured to facilitate attachment of the plate mounting member 200 to an external structure. In the present embodiment, the attachment features 214 comprise a plurality of openings. The openings may be configured to permit a fastener, such as a

screw, to pass therethrough so as to engage with a corresponding fastener receiving feature of the external structure. Referring now additionally to FIGS. 7-8, a plate mounting member 200 is shown attached to an external structure 700, in this embodiment, a canister light fixture, by a plurality of fasteners 702 positioned through the attachment features 214. The use of fasteners to attach the plate mounting member 200 to an external structure is exemplary only, and all other means or methods of attachment as are known in the art are contemplated and included within the scope of the invention.

[0053] The projection members 220 may be configured to cooperate with a structure of the luminaire 100 to attach to and carry the luminaire 100. Additionally, the projection members 220 may be positioned adjacent to the aperture 212 so as to attach to a structure of the luminaire 100 that extends through the aperture 212. In the present embodiment, the projection members 220 may be configured to attach to an outer surface of the distal cavity 119. More specifically, the projection members 220 may comprise one or more bends 222 configured to cause the shape of the projections members 220 to conform to the shape of the projections 119' of the distal cavity 119, as illustrated additionally in FIG. 9. When the distal cavity 119 is positioned to extend through the aperture 212, the projection members 220 may interface with the distal cavity 119 such that the bends 222 cause the projection member to catch on the projections 119' of the distal cavity 119, causing the projection members 220 to carry the luminaire 100.

[0054] Referring now back to FIGS. 1-3, an additional embodiment of mounting members according to the invention will now be discussed. Hook mounting members 300 may be configured to be attached to a structure of the luminaire 100 and removably couple to an external structure by hooking onto the external structure. The hook mount members 300 may comprise an attachment section 310, an extension section 320, and a hooked section 330. The attachment section 310 may be configured to attach the hook mounting member 300 to the luminaire 100 by attaching to a structure of the luminaire 100. In the present embodiment, the attachment section 310 may be configured to attach to the housing 110 of the luminaire 100. Furthermore, the attachment section 310 to be attached to the housing 110 by the use of fasteners positioned through a hole of the attachment section 310 and engaging with the second plurality of apertures 116", thereby attaching the attachment section 310. Any other means or method of attaching the attachment section 310 to the housing 110 as are known in the art are contemplated and included within the scope of the invention.

[0055] The extension section 320 may be configured to extend away from the attachment section 310. The extension section 320 may be configured to be attached to

the attachment section 310 at a first end and to the sloped section 330 at a second end. In some embodiments, each of or any combination of the attachment section 310, the extension section 220, and the hooked section 330 may be integrally formed as a single structure. The hooked section 330 may be configured to engage with an external hooked section 330 and the extension section 320.

[0056] Referring now to FIGS. 5-6, in embodiments of the luminaire 100 having hook mounting members 300 attached thereto is presented. In FIG. 5, the luminaire 100 is shown positioned immediately beneath an external structure 500, in the present embodiment, a canister light fixture. In FIG. 6, the luminaire 100 is shown having been positioned such that the hook mounting members 300 and engaged with the external structure 500, more specifically, the structural feature thereof such that the hook mounting members 300 and engaged with the structural feature so as to carry the luminaire 100 through the engagement. Accordingly, the external structure 500 may carry the luminaire 100 as a result of the hook mounting member 300 hooking onto the external structure 500.

[0057] Referring now back to FIGS. 1-3, an additional embodiment of mounting members according to the invention will now be discussed. Similar to the hook mounting members 300, spring mounting members 400 may be configured to be attached to a structure of the luminaire 100 and removably couple to an s by the exertion of force by a spring member 410 of the spring mounting member 400. In addition to the spring member 410, the spring mounting member 400 may comprise an attachment section 420, a spring mounting section 430, and a rotatable arm 440. The attachment section 420 may be configured to attach to the housing 110 of the luminaire 100 by the same method as the attachment of the hook mounting members 300. The spring mounting section 430 may extend away from the attachment section 420 may configured to facilitate the attachment of the spring member 410 thereto. Furthermore, the spring mounting section 430 may be configured to exert an opposing force to the spring member 410 so as to permit the rotation of the rotatable arm 440. The spring member 410 may be attached to and carried by the spring mounting section 430, and may additionally be attached to the rotatable arm 440 such that the rotatable arm 440 may be rotated with respect to the spring mounting section 430, with a resistive force being exerted upon the rotatable arm 440 by the spring member 410.

[0058] Referring now additionally to FIG. 10, an embodiment of a luminaire 100 including two spring mounting members 400 is presented. In the depiction, the rotatable arms 440 are shown engaging with an external structure 1000. The external structure

1000 may be any generally flat structure of sufficient structural strength and stability to carry the luminaire 400. In some embodiments, the external structure 1000 may be a ceiling, ceiling tile, or the like. The spring member 110 of each spring mounting member 400 may exert a force upon the rotatable arm 440 so as to cause an interactive force between the rotatable arm 440 and the external structure 1000 such that the external structure 1000 may carry the luminaire 100 thereby. Any number of spring mounting members 400 is contemplated included within the scope of the invention.

[0059] As referenced above, an embodiment of the invention may be a kit comprising a luminaire 100 as described hereinabove further comprising at least one mounting member. The kit may comprise any individual mounting member combinations thereof, or all of a plate mounting member 200, hook mounting members 300, and/or spring mounting members 400.

[0060] Some of the illustrative aspects of the present invention may be advantageous in solving the problems herein described and other problems not discussed which are discoverable by a skilled artisan.

[0061] While the above description contains much specificity, these should not be construed as limitations on the scope of any embodiment, but as exemplifications of the presented embodiments thereof. Many other ramifications and variations are possible within the teachings of the various embodiments. While the invention has been described with reference to exemplary embodiments, it will be understood by those skilled in the art that various changes may be made and equivalents may be substituted for elements thereof without departing from the scope of the invention. In addition, many modifications may be made to adapt a particular situation or material to the teachings of the invention without departing from the essential scope thereof. Therefore, it is intended that the invention not be limited to the particular embodiment disclosed as the best or only mode contemplated for carrying out this invention, but that the invention will include all embodiments falling within the description of the invention. Also, in the drawings and the description, there have been disclosed exemplary embodiments of the invention and, although specific terms may have been employed, they are unless otherwise stated used in a generic and descriptive sense only and not for purposes of limitation, the scope of the invention therefore not being so limited. Moreover, the use of the terms first, second, etc. do not denote any order or importance, but rather the terms first, second, etc. are used to distinguish one element from another. Furthermore, the use of the terms a, an, etc. do not denote a limitation of quantity, but rather denote the presence of at least one of the referenced item.

That Which is Claimed is:

1. A luminaire comprising (100):

a housing (110) formed of thermally conductive polymer;

an optic (140) carried by the housing (110);

a trim (150) carried by the optic;

a light source 130 comprising:

an LED board (132) comprising a copper layer,

a plurality of light-emitting diodes (LEDs) (131) disposed on the LED board (132) and electrically coupled to the power circuit (120), and

control circuitry (136) operably coupled to the plurality of LEDs (131),

wherein the LED board (132) is positioned in thermal communication with the housing (110); and

a mounting member configured to be attached to each of the housing (110) and an external structure being at least one of a canister light fixture and a junction box;

wherein the control circuitry (136) is configured to operate the plurality of LEDs (131) such that heat generated by the plurality of LEDs (131) is dissipated by the copper layer of the LED board (132).

2. The luminaire (100) according to Claim 1 wherein a power circuit (120) is positioned in electrical communication with the light source 130 and configured to receive electrical power from a power source, condition the electrical power for use by the light source 130, and deliver the conditioned electrical power to the light source 130.

3. The luminaire (100) according to Claim 1 wherein the housing (110) is composed of polycarbonate 5VA flame rated material.

4. The luminaire (100) according to Claim 1 wherein the control circuitry (136) is configured to reduce the thermal energy produced by the plurality of LEDs (131) by reducing the duty cycle of one or more of the LEDs (131).

5. The luminaire (100) according to Claim 1 wherein the control circuitry (136) is configured to reduce the thermal energy produced by the plurality of LEDs (131) by underdriving one or more of the LEDs.

6. The luminaire (100) according to Claim 1 wherein the control circuitry (136) comprises electronic components necessary for controlling the operation of the

light source (130) comprising a microcontroller, a memory, and connections configured to enable the operation of individual LEDs or subsets of LEDs.

7. The luminaire (100) according to Claim 1 further comprising a plurality of pillars (160) configured to attach the power circuit (120) to the light source 130 circuit board and to space the power circuit (120) apart from the light source 130.

8. The luminaire (100) according to Claim 7 wherein the plurality of pillars (160) are formed of a material having a low rate of thermal conductivity; wherein the plurality of pillars (160) are attached to the power circuit (120) and configured so as to be carried by the light source 130.

9. The luminaire (100) according to Claim 1 wherein the optic (140) is positioned to be in communication with the light source 130 and configured to alter light passing through the light source 130 by diffusing light passing therethrough and structuring the emitted light to appear uniform in brightness, color, color temperature, and CRI.

10. The luminaire (100) according to Claim 1 further comprising a gasket (170) positioned between the optic (140) and the housing (110).

11. The luminaire (100) according to Claim 1 wherein the trim (150) is configured to be carried by the housing (110) so as to overlie the optic (140) perimeter.

12. The luminaire (100) according to Claim 1 wherein the mounting member comprises a plate mounting member (200) comprising a base member 210 with a medially located aperture; wherein the plate mounting member (200) is configured to be attached to the external structure; and wherein the plate mounting member (200) is configured to be attached to the luminaire (100) by the positioning of at least part of the luminaire (100) within the medially located aperture.

13. The luminaire (100) according to Claim 12 wherein the base member 210 comprises one or more attachment features configured to facilitate the attachment of the plate mounting member (200) to the external structure.

14. The luminaire (100) according to Claim 12 wherein the base member 210 comprises one or more projection members (220) positioned adjacent to the medially

located aperture so as to attach to a structure of the luminaire (100) that extends through the medially located aperture.

15. The luminaire (100) according to Claim 14 wherein the housing (110) comprises a distal cavity (119) comprising one or more projections (119'); and wherein the projection members (220) comprise one or more bends configured to conform, interface, and interlock with the projections (119') of the distal cavity (119).

16. The luminaire (100) according to Claim 1 wherein the mounting member comprises hook mounting members (300) attachable to the luminaire housing (110) and configured to engage the external structure.

17. The luminaire (100) according to Claim 1 wherein the mounting member comprises spring mounting members (400) comprising rotatable arms (440); and wherein the spring mounting members (400) are attachable to the luminaire housing (110) and configured so as to engage the external structure.

18. A luminaire (100) comprising:

a housing (110) formed of heat resistant polycarbonate material;

an optic (140) formed of heat resistant polycarbonate material and carried by the housing (110);

a trim (150) carried by the optic (140);

a power circuit (120);

a light source (130) comprising:

an LED board (132) comprising a copper layer,

a plurality of light-emitting diodes (LEDs) (131) disposed on the LED board (132) and electrically coupled to the power circuit (120), and

control circuitry (136) operably coupled to the plurality of LEDs (131),

wherein the LED board (132) is positioned in thermal communication with the housing (110); and

a plate mounting member (200) comprising a base member 210 with a medially located aperture;

wherein the control circuitry (136) is configured to operate the plurality of LEDs (131) such that heat generated by the plurality of LEDs (131) is dissipated by the copper layer of the LED board (132) so as to maintain a thermal equilibrium in the plurality of LEDs (131);

wherein the control circuitry (136) is configured to reduce the thermal energy produced by the plurality of LEDs (131) by one of reducing the duty cycle and underdriving one or more of the LEDs;

wherein the plate mounting member (200) is configured to be attached to an external structure being one of a canister light fixture and a junction box; and

wherein the plate mounting member (200) is configured to be attached to the luminaire (100) by the positioning of at least part of the luminaire (100) within the medially located aperture.

19. A kit comprising:

a luminaire (100) comprising:

a housing (110) formed of heat resistant polycarbonate material,

an optic (140) formed of heat resistant polycarbonate material and carried by the housing (110),

a trim (150) carried by the optic (140), and

a power circuit (120),

a light source (130) comprising:

an LED board (132) comprising a copper layer,

a plurality of light-emitting diodes (LEDs) (131) disposed on the LED board (132) and electrically coupled to the power circuit (120), and

control circuitry (136) operably coupled to the plurality of LEDs (131),

wherein the LED board (132) is positioned in thermal communication with the housing (110);

a mounting member comprising at least one of:

a plate mounting member (200) comprising a base member 210 with a medially located aperture;

one or more spring mounting members (400); and

one or more hook mounting members (300).

20. The kit according to Claim 19 wherein the luminaire (100) further comprises a power circuit (120); and wherein the plurality of LEDs (131) are electrically coupled to the power circuit (120).

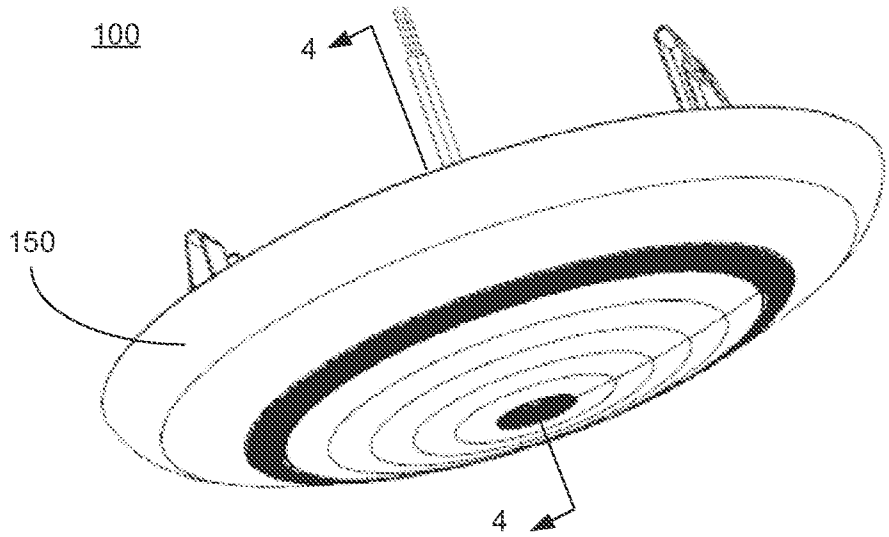

FIG. 1

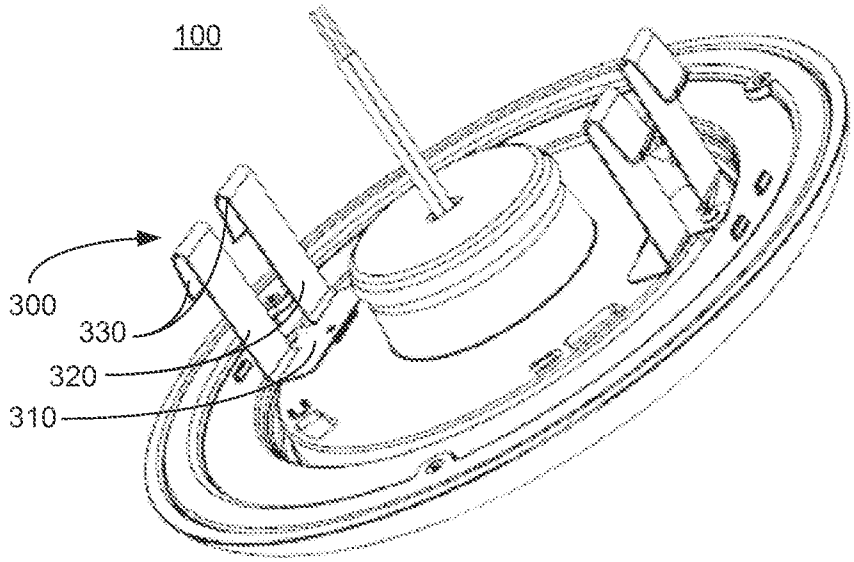

FIG. 2

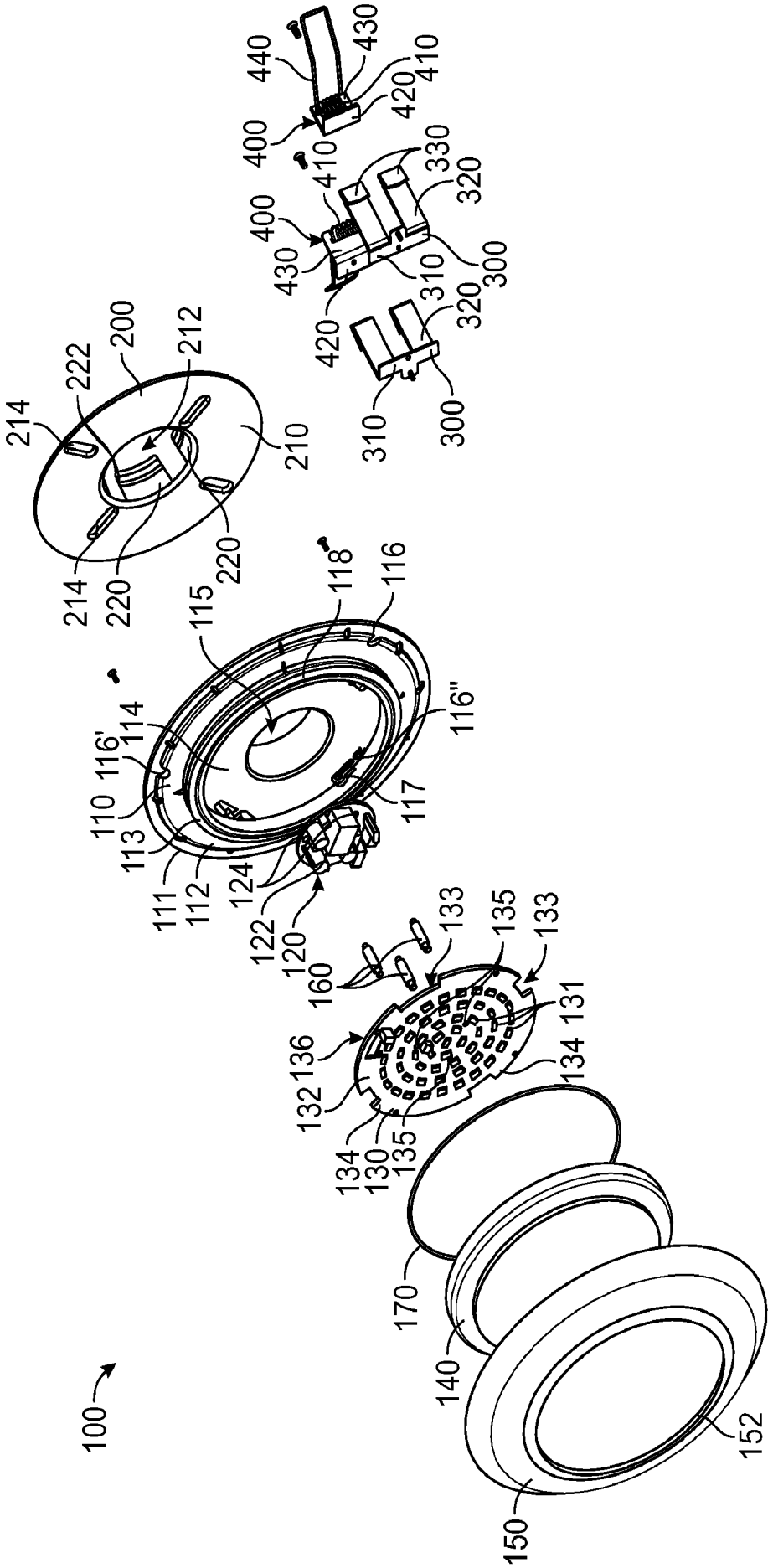
100
400
410
420
430
440
300
310
320
330
200
210
212
214
220
222
111
112
113
114
115
116
116'
116"
117
118
120
122
124
130
131
132
133
134
135
136
140
150
152
160
170

FIG. 3

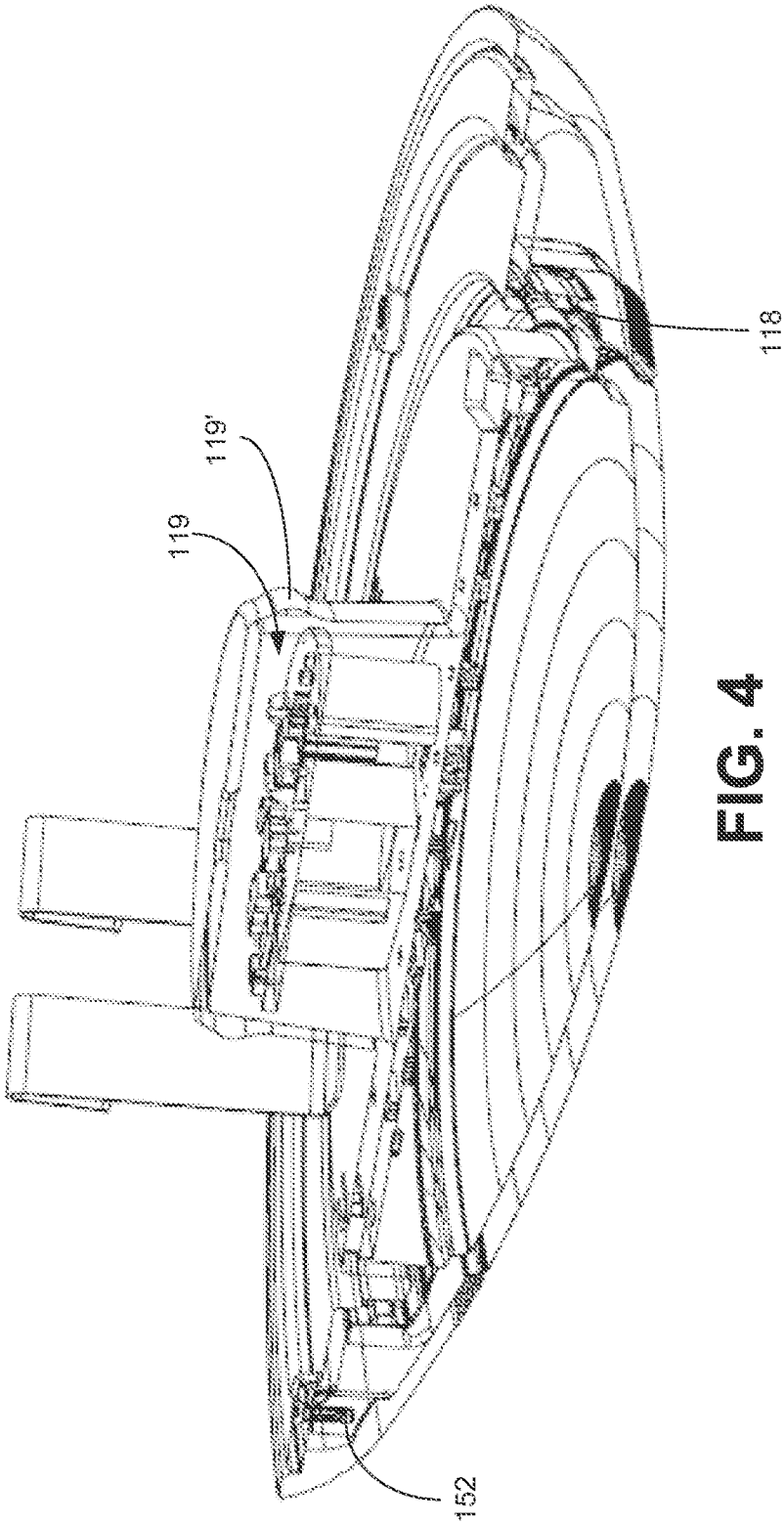

FIG. 4

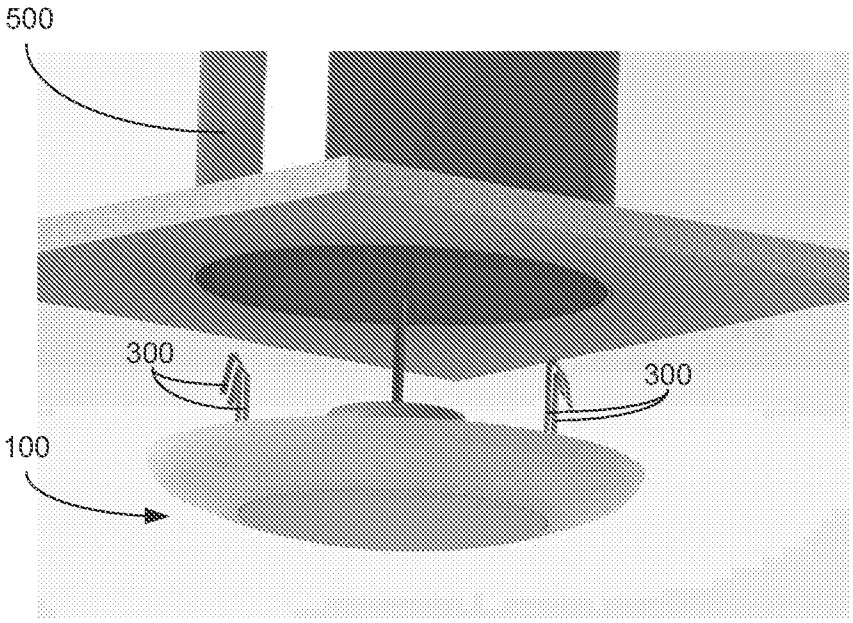

FIG. 5

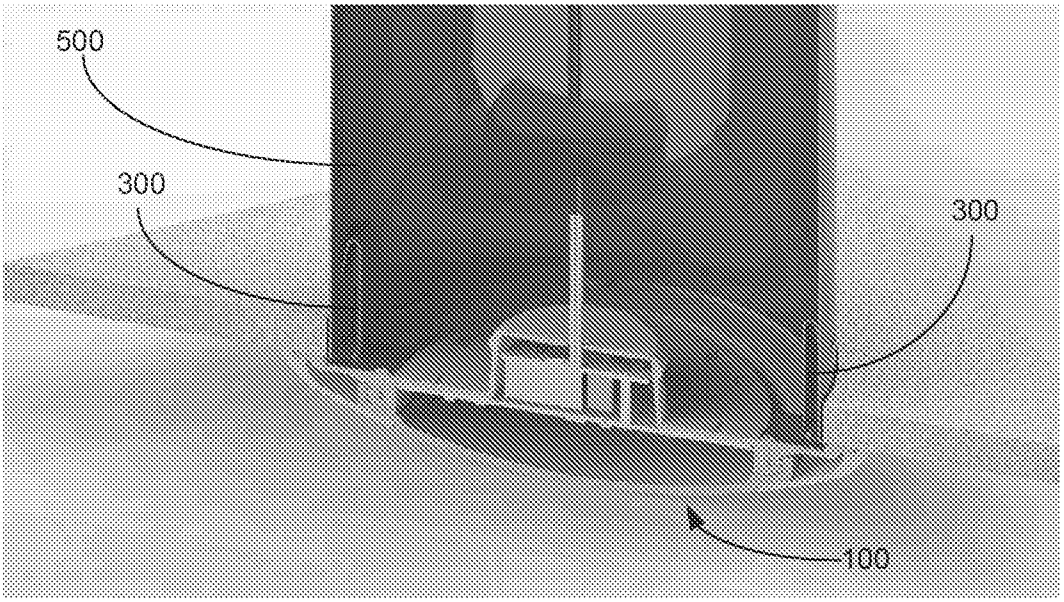

FIG. 6

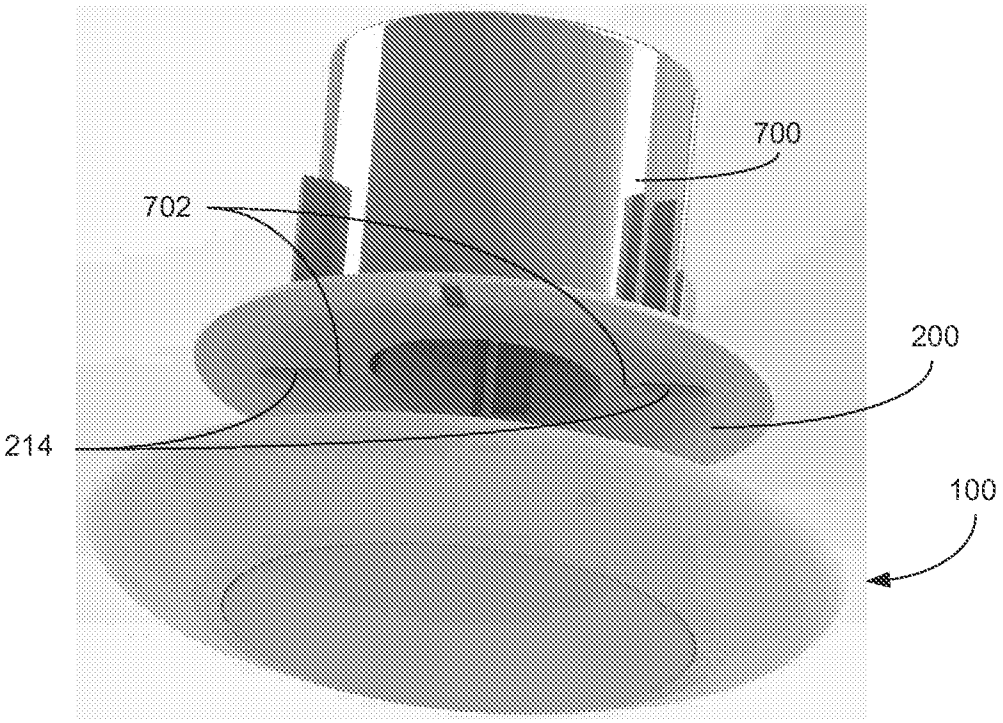

FIG. 7

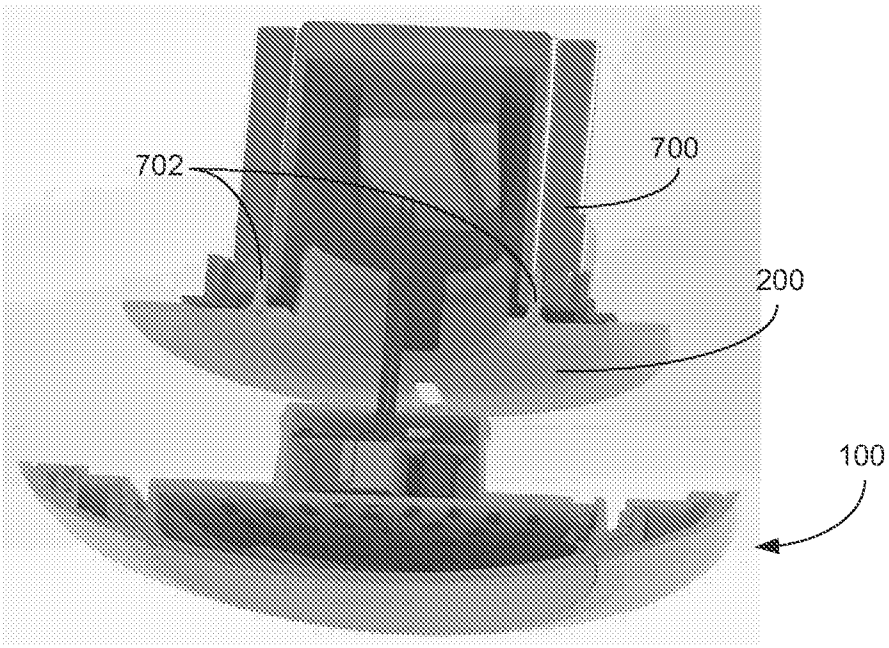

FIG. 8

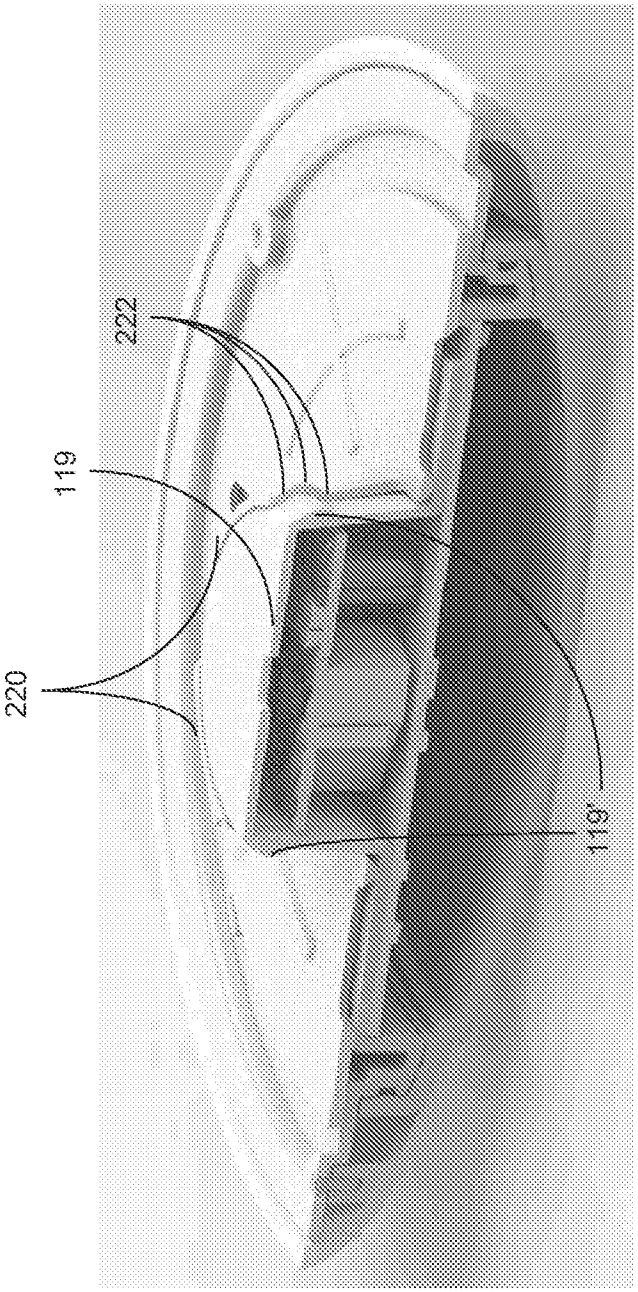

FIG. 9

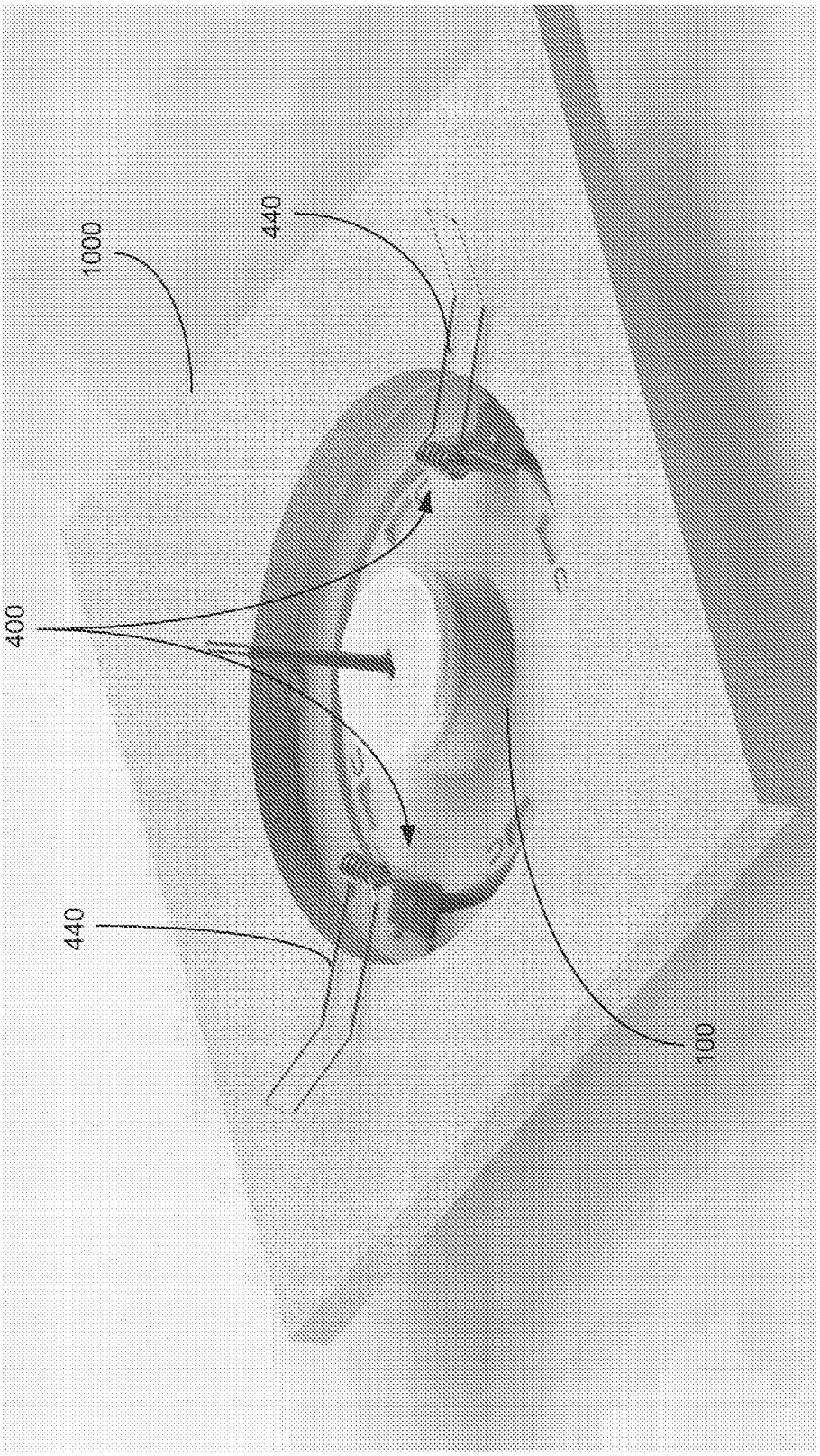

FIG. 10

INTERNATIONAL SEARCH REPORT

International application No
PCT/US2015/063431

A. CLASSIFICATION OF SUBJECT MATTER
INV. F21S8/02 F21V19/00 F21V21/04 F21V29/502
ADD. F21Y105/12 F21Y101/00

According to International Patent Classification (IPC) or to both national classification and IPC

B. FIELDS SEARCHED

Minimum documentation searched (classification system followed by classification symbols)
F21S F21V F21Y

Documentation searched other than minimum documentation to the extent that such documents are included in the fields searched

Electronic data base consulted during the international search (name of data base and, where practicable, search terms used)

EPO-Internal , WPI Data

C. DOCUMENTS CONSIDERED TO BE RELEVANT

Category*	Citation of document, with indication, where appropriate, of the relevant passages	Relevant to claim No.
Y	US 2012/262921 Al (B00MGAARDEN MARK PENLEY [US] ET AL) 18 October 2012 (2012-10-18) figures 14-18, 27 paragraphs [0045] , [0054] , [0060] - [0075] -----	1-5 , 9-14, 16, 17
Y	US 2010/053950 Al (HIGUCHI KAZUNARI [JP] ET AL) 4 March 2010 (2010-03-04) figure 1 paragraph [0024] - paragraph [0030] -----	1-5 , 9-14, 16, 17
A	EP 1 950 491 Al (PI PER LUX S R L [IT]) 30 July 2008 (2008-07-30) figure 1 paragraph [0013] - paragraph [0031] -----	18, 19

-/--

[X] Further documents are listed in the continuation of Box C.

[X] See patent family annex.

* Special categories of cited documents :

"A" document defining the general state of the art which is not considered to be of particular relevance

"E" earlier application or patent but published on or after the international filing date

"L" documentwhich may throw doubts on priority claim(s) orwhich is cited to establish the publication date of another citation or other special reason (as specified)

"O" document referring to an oral disclosure, use, exhibition or other means

"P" document published prior to the international filing date but later than the priority date claimed

"T" later document published after the international filing date or priority date and not in conflict with the application but cited to understand the principle or theory underlying the invention

"X" document of particular relevance; the claimed invention cannot be considered novel or cannot be considered to involve an inventive step when the document is taken alone

"Y" document of particular relevance; the claimed invention cannot be considered to involve an inventive step when the document is combined with one or more other such documents, such combination being obvious to a person skilled in the art

"&" document member of the same patent family

Date of the actual completion of the international search	Date of mailing of the international search report
22 February 2016	01/03/2016

Name and mailing address of the ISA/	Authorized officer
European Patent Office, P.B. 5818 Patentlaan 2 NL - 2280 HV Rijswijk Tel. (+31-70) 340-2040, Fax: (+31-70) 340-3016	Sacepe, Nicolas

1

Form PCT/ISA/210 (second sheet) (April 2005)

INTERNATIONAL SEARCH REPORT

International application No
PCT/US2015/063431

C(Continuation). DOCUMENTS CONSIDERED TO BE RELEVANT

Category*	Citation of document, with indication, where appropriate, of the relevant passages	Relevant to claim No.
A	JP 2010 198807 A (SHARP KK) 9 September 2010 (2010-09-09) figure 5 paragraphs [0061] , [0062] -----	7,8

1

Form PCT/ISA/210 (continuation of second sheet) (April 2005)

INTERNATIONAL SEARCH REPORT

Information on patent family members

International application No
PCT/US2015/063431

Patent document cited in search report	Publication date	Patent family member(s)	Publication date
US 2012262921 A1	18-10-2012	US 2012262921 A1	18-10-2012
		US 2014104847 A1	17-04-2014
		US 2015092421 A1	02-04-2015
		US 2015300622 A1	22-10-2015
US 2010053950 A1	04-03-2010	AT 529698 T	15-11-2011
		CN 101660677 A	03-03-2010
		EP 2177825 A1	21-04-2010
		JP 5077693 B2	21-11-2012
		JP 2010055938 A	11-03-2010
		US 2010053950 A1	04-03-2010
EP 1950491 A1	30-07-2008	NONE	
JP 2010198807 A	09-09-2010	NONE	