(12) UK Patent Application (19) GB (11) 2 146 705 A

(43) Application published 24 Apr 1985

(21) Application No 8325240

(22) Date of filing 21 Sep 1983

(51) INT CL⁴
F04B 43/10

(52) Domestic classification
F1R 15A
U1S 1111 F1R

(56) Documents cited
GB A 2100357
GB A 2099514
GB 1398628
GB 1245424
GB 0870710
GB 0694879
GB 0455678
GB 0395994

(58) Field of search
F1R

(71) Applicant
Arthur Guinness Son and Company (Park Royal) Limited (United Kingdom),
Park Royal Brewery, London NW10 7RR

(72) Inventors
John Barclay Hedderick
Geoffrey Ernest MacDonell
Alistair John Scott
Howard William Biddle

(74) Agent and/or Address for Service
Urquhart-Dykes & Lord,
47 Marylebone Lane, London W1M 6DL

(54) A unit for dispensing beverage

(57) A unit for dispensing beverage has one or more pressure vessels 4 each having an outlet 11 for communication to a dispensing tap 15. Each vessel 4 accommodates a flexible bag 18 containing the beverage having gas in solution. The vessels 4 are pressurised through connection 16 by an air compressor in the unit or from an existing fluid line and this pressurisation serves to ensure dissolution of the gases in the beverage and also to expel the beverage from the bags 18.

The beverage is normally sealed in the bags prior to loading into the pressure vessels and the pressure of dispensing may burst a membrane in the port 19 to permit the flow of beverage from the bag. Alternatively the coupling of the pipe 20 with the port 19 may break the membrane for dispensing.

There is a refrigeration system 9 with cooling coils 7.

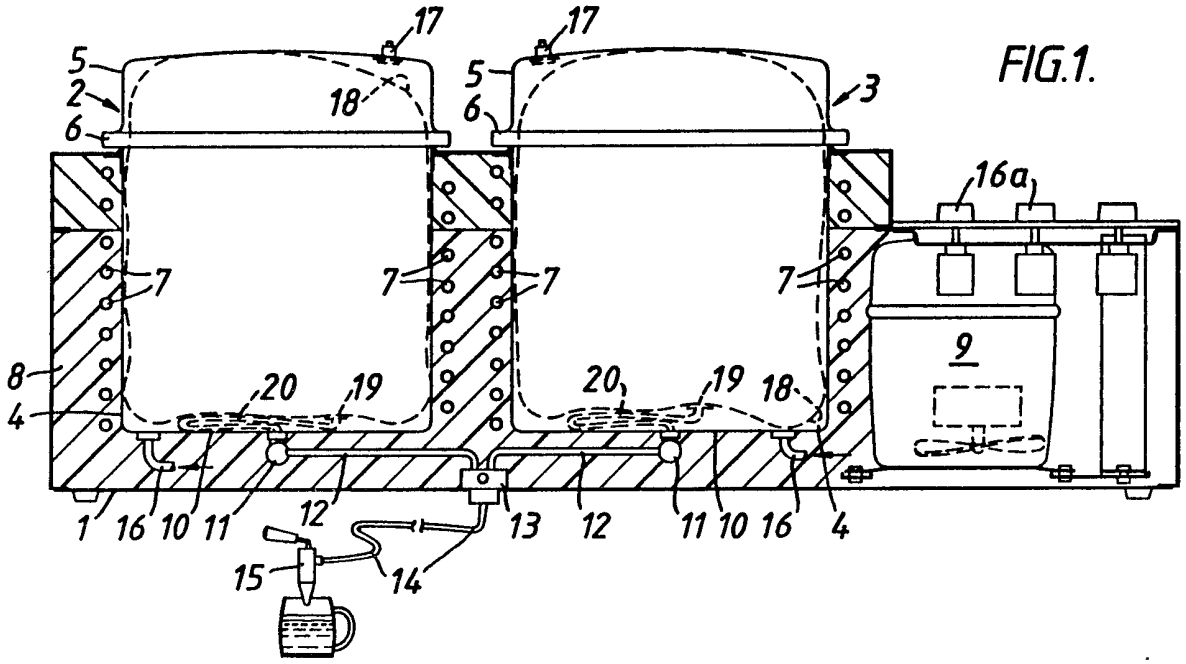

FIG.1.

GB 2 146 705 A

The drawing(s) originally filed was/were informal and the print here reproduced is taken from a later filed formal copy.

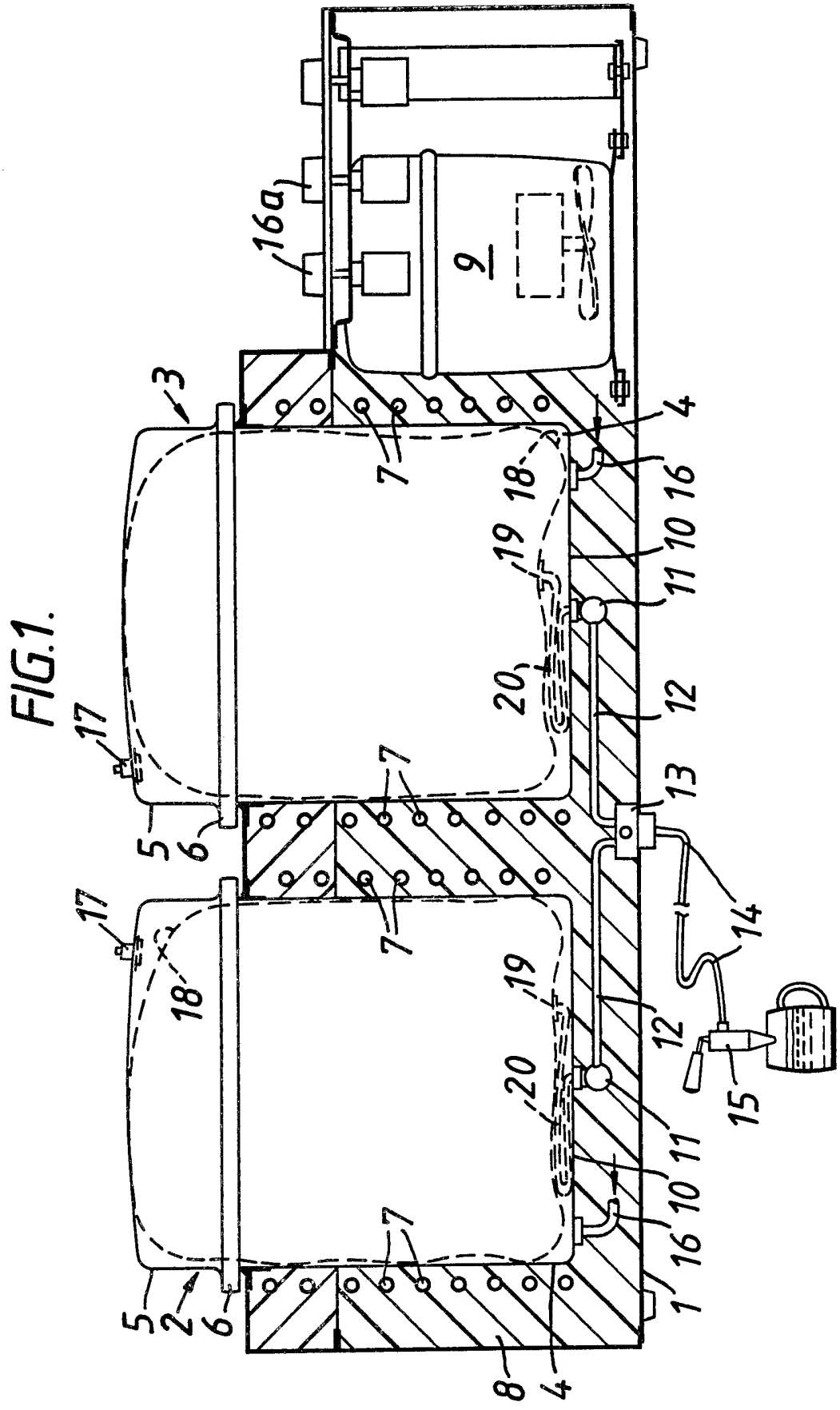

FIG.1.

2146705

FIG. 2.

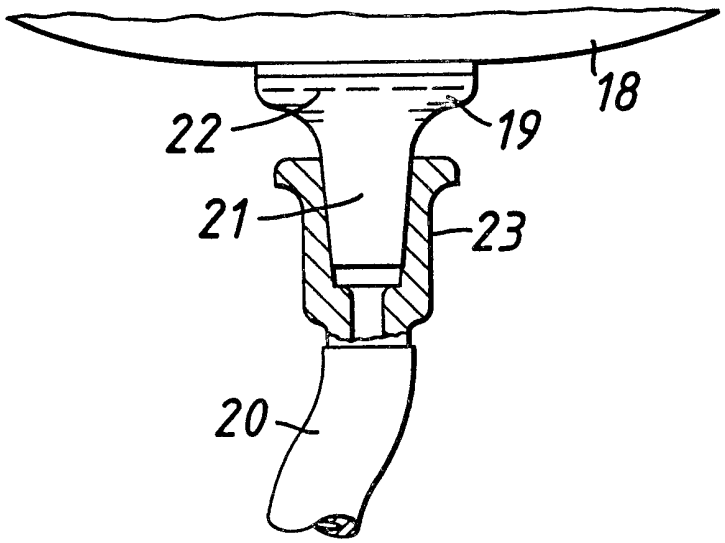

FIG. 3.

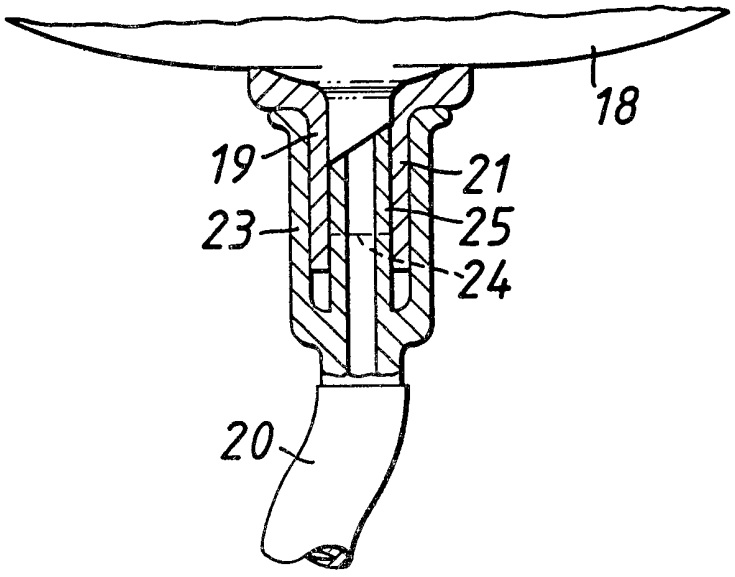

SPECIFICATION

A unit for dispensing beverage

TECHNICAL FIELD AND BACKGROUND ART

This invention relates to a unit for dispensing beverage containing gas in solution and is primarily concerned with the provision of a compact unit which is suitable for use in outlets such as bars or clubs which have relatively slow sales of the beverage.

In the brewing industry there are many occasions where a retail outlet for fermented beverages such as beer, ale, lager or stout containing gas in solution has such a low through-put of the beverage on a daily or weekly basis that a bulk dispensing system is not justified to provide the beverage in draught form. In a bulk dispensing system for fermented beverage it is well known to maintain the beverage under pressure for dispensing by an external source of the gas in solution; this gas is usually carbon dioxide or a mixture of carbon dioxide and nitrogen. The use of the latter mixed gases is preferable, particularly for stout, where the nitrogen content adds considerably to the characteristics of the beverage and also to the foam head which may be formed during dispensing of the beverage (if the gases are released from solution by subjecting the beverage to cavitation in conventional manner). For outlets having a low through-put the expense and accommodation of a cask or keg of beverage together with a conventional draughting system comprising a source of gas such as carbon dioxide and nitrogen is unlikely to be justified. In an attempt to overcome this problem it has hitherto been proposed (or example by the disclosure in our U.K. Patent No. 1,588,624) to provide beverage in a small package or container (such as a bottle or carton) in which the beverage contains a gaseous mixture of carbon dioxide and nitrogen and to excite the beverage (for example ultrasonically) to release some of the nitrogen gas and provide the beverage with characteristics similar to those which are to be expected from the beverage in draught form. While this technique is appropriate for low through-put trade outlets and off-sales and provides a beverage having substantially the same quality and characteristics as a similar beverage draughted from a bulk system, there is nevertheless a requirement for a compact unit by which beverage can be dispensed as by a draught system from a container in volumes greater than the aforementioned package system but less than the bulk system. It is an object of the invention to satisfy the above requirement in which the container progressively empties on demand, the characteristics of the beverage and its gaseous content are maintained substantially constant throughout the emptying of the container without the admission of gas to the container, and the unit is suitable for use in low through-put outlets where there may be a requirement for dispensing of, say, ten litres of the beverage daily. With such a low through-put it will be realised that the dispensing unit must be relatively simple in operation, inexpensive to manufacture and of a compact nature for mounting somewhat unobtrusively in a bar or counter.

STATEMENT OF INVENTION AND ADVANTAGES

According to the present invention there is provided a compact unit for dispensing beverage containing gas in solution which comprises a pressure vessel having an outlet for communication with a dispensing tap; a flexible bag containing the beverage and gas which is to be dispensed, said bag being housed in the vessel; means for pressurising the pressure vessel for re-establishing a desired equilibrium of the beverage prior to dispensing so that gas which has come out of solution subsequent to the filling of the bag can be re-dissolved into the beverage and for dispensing the beverage from the bag, and wherein the pressure vessel is openable to receive the bag and its contents as a whole, said bag being delivered to the vessel in a sealed condition and coupling means is provided for connecting a sealed outlet port in the bag in fluid flow communication with outlet of the pressure vessel.

Preferably the compact unit of the present invention has at least two of the pressure vessels each having an outlet for connection with the dispensing tap and a selector valve is provided for optionally opening and closing fluid flow communication between each of those outlets and the tap. Each of the pressure vessels will house one of the flexible bags containing the beverage and gas which is to be dispensed so that the unit can accommodate two or more of the bags with the outlet ports in the bags in fluid flow communication (by way of the coupling means) with the outlets of the respective pressure vessels. With two or more such pressure vessels and bags, the means for pressurising is arranged to permit each pressure vessel to be optionally pressurised for establishing the desired equilibrium in, and for the dispensing of, the beverage in the bag of that vessel.

By the present invention the or each pressure vessel (and preferably two such vessels are provided) will accommodate a bag containing the beverage and gas or gases which are to be dispensed by pressurisation within the vessel (but externally of the bag) to dispel the beverage through the dispensing tap. In the case of fermented beverage such as stout which contains both carbon dioxide and nitrogen in solution, the dispensing tap will usually incorporate an apertured plate by which the beverage is subjected to cavitation for release

of some of the nitrogen to assist in developing the characteristics for the head on the draught beverage. Consequently sealed flexible bags charged with the beverage and gases (the beverage content preferably being in the range 2.5 to 10 litres) can be transported and stored independently of the dispensing unit and loaded into the unit as required. Prior to such loading a proportion of the gas or gases in the beverage will come out of solution into a headspace; the beverage, if dispensed in this condition, will have different, less preferable, characteristics as to appearance, taste (quality) and mouthfeel as compared to the beverage when dispensed with the preferred quantity of gas dissolved in it. Bearing this in mind, the pressurisation of the pressure vessel serves two important functions; firstly to ensure that the gas or gases which may be released from the beverage prior to the bag being loaded can be re-dissolved before dispensing and secondly to provide a pressure for dispensing which maintains the gases in solution as the bag collapses whilst being emptied. It is envisaged that a bag may have to be pressurised within a pressure vessel for a few hours to achieve sufficient dissolution of the gases to ensure that the beverage is suitable for dispensing; it is for this reason it is preferred that the unit has two or more pressure vessels so that the beverage in a bag in one of the vessels can be available for dispensing while beverage in a bag in the other vessel or vessels is undergoing pressurisation to render it suitable for dispensing in sequence as the bag in the first mentioned vessel empties and that vessel has to be reloaded.

The flexible bags may be of a standard form which are well known in the liquid food or beverage trade so that they may be of a metallised platics material (such as the "Liqui-Box" multi-ply bags marketed by Corrugated Products Limited), or such non toxic flexible materials that are relatively impermeable to gases.

Although the present invention may be applied to gasified beverages of a non-fermented nature, such as carbonated soft drinks, it was particularly developed for use with fermented beverages. The invention may conveniently therefore be considered in its application to a stout in which mixed nitrogen and carbon dioxide gases are essential constituents for providing the desired characteristics of the beverage and its foam head when dispensed (where the carbon dioxide effectively provides the volume of the head and the nitrogen is believed to stabilise a small bubble size which is preferred). As previously mentioned, some of the mixed gases will come out of solution prior to the bag being loaded in the or a pressure vessel and commercially it is important that the time for the gases to redissolve (when the vessel is pressurised) is reduced to a minimum, say less than six hours for a low through-put outlet where each bag may have a beverage content in the range of 2.5 to 5 litres. Dissolution of the gases is promoted by cooling the beverage and this cooling can be achieved by storing the bags in a cool box or refrigerator prior to loading them into a pressure vessel. Preferably however the compact unit includes means for cooling the bag or bags in its respective pressure vessel so that the beverage is cooled while it is pressurised within the vessel. The preferred cooling serves two purposes, firstly to increase the rate at which the gases will be re-dissolved in the beverage and secondly to ensure that the beverage will be dispensed at an acceptable temperature for consumption—this temperature is usually in the range of 8°C to 12°C. The cooling is preferably achieved by use of a thermostatically controlled refrigeration system in the unit. Preferably the cooling of each bag is separately controlled.

Experiments indicate that for dispensing purposes and also to achieve acceptable rates of dissolution of the gases in fermented beverage, the pressure vessels will usually have to withstand pressurisation to the range of 30 to 55 p.s.i. (absolute) (2.0 to 3.7 bars) and the pressure vessels must be capable of withstanding these pressures with an acceptable safety margin. The strength requirement for the or each pressure vessel is comparable to that of a domestic pressure cooker manufactured in accordance with British Standard 1746–1977. Accordingly, the or each pressure vesssel may consist of two drawn container parts of aluminium or stainless steel appropriately anodised (to alleviate corrosion) and with a bayonet fitting between these two parts. A self-sealing ring will usually be provided between the two parts to maintain gas tightness. The outlet from the or each pressure vessel is preferably located substantially at a lowermost position in that vessel, probably in the base of the vessel (this should ensure that as much beverage can be extracted from the bag as is possible and it will also facilitate flushing and cleaning of the outlet). Each pressure vessel will also include a pressurising medium connection and preferably this is located at a low position, say through the base, of the vessel so that the vessel container part which may constitute a lid is free of pipework and easily removed for loading a bag.

Pressurisation of the or each pressure vessel can be achieved from a source within the unit, such as an electrically operated air compressor. Althernatively the pressurisation can be achieved from a source which is external to the unit such as a pressurised line of carbon dioxide or air which may be available on the premises where the unit is to be installed. The possibility of using water pressure is also envisaged. The pressure vessel or vessels will

usually have safety relief valves and an associated pressure control valve by which the or each vessel can be individually pressurised or de-pressurised. Preferably the safety valve and port through which the vessel is to be exhausted (de-pressurised) are located at positions where beverage is unlikely to enter them and where they are not likely to be obturated by the bag. The pressure vessel or vessels may be orientated in the unit in a manner which is convenient for installation of the unit in a bar or club environment so that the or each vessel may be upright and openable to provide top loading (loading from above) of the bags or horizontal and openable to provide front or side loading of the bags or inclined, say at 45°, as convenient.

Preferably the pressurisation of the or each vessel is variable from high pressure (to expedite the rate of dissolution of the gas into the beverage prior to dispensing) and low pressure (for dispensing purposes). The conversion from high to low pressure can be automatic under time control if required.

The sealed outlet ports of the bags preferably comprise membranes which are intended to be broken or cut to permit dispensing of the beverage through those ports. In a preferred arrangement the membranes are of predetermined strength so that they burst under the pressure differential which is deveoped across them when the dispensing tap is initially opened and the bags are externally pressurised. In a further arrangement the membrane may be cut off immediately prior to the bag being connected in fluid flow communication with the outlet of the vessel. In a still further arrangement the membrane may be pierced by the coupling means during sealed connection of the bag to its respectively associated vessel outlet. The coupling means preferably comprises a tubular socket component which receives a tubular spigot component to provide a sealed fluid connection, one of these components being on the bag and the other being in fluid flow communication with the vessel outlet. Preferably the component which is in fluid flow communication with the vessel outlet is connected to that outlet through a flexible tube which facilitates the coupling of the socket and spigot components prior to the bag being fully loaded into the vessel. If required the insertion of the tubular spigot component into the socket component can cause the membrane to be pierced as aforementioned. In this latter arrangement it is preferred that the membrane is carried by the tubular spigot on the bag and that the socket component carries a tubular needle which is protected by the wall of the socket and which pierces the membrane during engagement of the spigot with the socket.

DRAWINGS

One embodiment of a unit for dispensing beverage containing gas in solution and constructed in accordance with the present invention will now be described, by way of example only, with reference to the accompanying illustrative drawing in which:-

Figure 1 diagrammatically illustrates a side elevation of the unit in part section, and

Figures 2 and *3* respectively illustrate alternative coupling means for effecting a fluid flow connection between sealed outlet ports in bags and outlet ports of presure vessels within which those bags are accommodated.

DESCRIPTION WITH REFERENCE TO DRAWINGS

The unit for dispensing beverage containing gas in solution as illustrated is intended to be of a compact structure so that it is readily portable, as a whole, to a site such as as a bar or club where the beverage is to be retailed; the unit is intended to be capable of installation and operation by unskilled personnel and to be used in conditions where a low throughput of the beverage is required, say of the order of 5 to 10 litres daily.

The unit illustrated is particularly suitable for use with fermented beverages and was developed for dispensing draught stout containing carbon dioxide and nitrogen gases in solution to the extent that at 15°C and atmospheric pressure, one volume of the stout contains carbon dioxide which is present in the range 0.8 to 1.8 volumes and contains nitrogen which is present in the range 0.015 to 0.035 volumes.

The unit has a casing within which are housed two generally cylindrical pressure vessels 2 and 3. The vessels 2 and 3 are upstanding and constructed similarly to conventional domestic pressure cookers in accordance with British Standard 1746–1977 to comprise a body part 4 and a lid 5 which is secured to the body part through a bayonet fitting between co-operating flanges 6 of the two parts. The body parts 4 are encircled by refrigeration cooling coils 7 and insulated within the casing 1 by appropriate foam plastics material 8. The cooling coils form part of a refrigeration system 9 by which the temperatures of the two pressure vessels are individually thermostatically controlled. The refrigeration sytem 9 is capable of maintaining the two pressure vessels within a temperature range of 8°C to 12°C.

In the flat base 10 of each pressure vessel is located an outlet 11; the outlets 11 communicate through passages 12 with a selector valve 13. The valve 13 permits either one of the two passages 12 to communicate with a conduit 14 to a dispensing tap 15 whilst the other passage 12 is closed to such communication. The tap 15 can be mounted on the casing 1 or remote from the casing, say in the manner of a conventional bar fitting. The tap may be of a conventional form comprising an

apertured plate through which the stout is to be dispensed and subjected to cavitation (which causes release of the mixed gases to assist in the development of a head on the stout).

Located in the base 10 of each pressure vessel is a pressure medium port/connection 16 by which gas under pressure can be admitted into either or both pressure vessels and also either or both pressure vessels can be exhausted. The pressurised gas supply may conveniently be taken from an existing carbon dioxide or air pressure line in the premises where the unit is installed; alternatively the unit may incorporate an air compressor (not shown).

Pressure control valves 16*a* are provided for individually pressurising or exhausting the respective pressure vessels. If required, a pressure regulator can be provided for optionally pressurising the respective vessels to, say either 35 p.s.i. absolute (2.3 bars) or 55 p.s.i. absolute (3.7 bars). A safety pressure relief valve 17 is provided in the lid of each pressure vessel.

The stout which is to be dispensed is delivered to the unit in flexible bags 18 each of which accommodates five litres of the beverage together with the appropriate gaseous content. With the lids 5 removed, the bags 18 are loaded into the body parts 4 of the pressure vessels to be closely accommodated within these vessels as indicated in Fig. 1. However, prior to loading the bags and closing the lids of the pressure vessels through the bayonet fittings 6, it is necessary to effect a fluid flow connection between sealed outlet ports 19 in the bottoms of the bags with the outlets 11 of the respective pressure vessels. The bags 18 may be of a conventional metallised plastics structure in which the outlet port 19 is sealed by a plastics membrane. This membrane in the port 19 has to be broken to permit dispensing of the beverage. The port 19 is intended to be connected in fluid flow communication with the outlet 11 by way of a flexible pipe 20. The pipe 20 communicates at one end to the vessel outlet 11 while its other end is intended to be connected to the outlet port 19 by means of the coupling shown in Fig. 2 or Fig. 3. To facilitate its coupling to the port 19, the pipe 20 may be extended from the body part 4 of its respective pressure vessel.

In the coupling arrangement shown in Fig. 2 the outlet port 19 on the flexible bag comprises a tubular spigot 21 communication between which and the beverage in the bag is sealed by a membrane 22. The pipe 20 carries a tubular socket 23 which receives the spigot 21 in sealed manner (if required an O-ring or similar seal can be provided between these co-operating components). With the socket and spigot thus connected the bag 18 is loaded into the vessel part 4 ensuring that the pipe 20 is not kinked and that the outlet port 19 is lowermost. For dispensing purposes the pressure vessels will be pressurised by the admission of carbon dioxide through the connection 16 and the characteristics of the membrane 22 are selected so that the membrane will burst under the pressure differential which develops when the tap 15 is initially opened for dispensing (and the bag 18 is subjected to the dispensing pressure) and stout is thereby admitted into the pipe 20.

In the alternative coupling arrangement shown in Fig. 3 the bag 18 again carries a tubular spigot 21 which, in this instance, is closed by a wall or membrane part indicated at 24 towards the free end of the spigot. The spigot 21 is again received within a tubular socket 23 carried by the pipe 20 but in this instance the socket 23 houses a tubular needle 25 which pierces the membrane 24 as the connection is made between the spigot 21 and socket 23. Again this latter connection is intended to provide sealed communication between the beverage in the bag 18 and the pipe 20. By ensuring that the needle 25 is housed within the socket 23 it will be seen from Fig. 3 that the needle is protected to an extent that it is unlikely to inadvertently pierce the wall of the bag 18.

When the pressure vessels 2 and 3 have had their respective bags 18 loaded and the lids 5 are fitted and sealed, cooling of the beverage can commence by the refrigeration system 9. In addition, the pressure vessels are pressurised through the connections 16. Prior to the bags being loaded into the pressure vessels, some of the mixed gases originally in solution in the beverage will have come out of solution and be located in a headspace in the bag. To provide the beverage with the desirable characteristics for consumption it is necessary that the emergent gases are redissolved in the beverage. This dissolution is achieved by subjecting the bags to pressure and cooling for a predetermined period, say five hours, before dispensing. When the beverage has re-attained its equilibrium in the bags 18, the selector valve 13 is adjusted to an appropriate one of the pressure vessels and dispensing effected through the tap 15 in conventional manner. Preferably the dispensing pressure within the pressure vessels is approximately 35 p.s.i. absolute (2.3 bars) while a greater pressure within the pressure vessels is preferred to expedite dissolution of the released gases; accordingly the pressure may be regulated to, say, 55 p.s.i. absolute (3.7 bars) while the beverage in the pressure vessels is attaining its desired equilibrium condition for dispensing and subsequently the pressure can be reduced for dispensing. It may be that between three and six hours pressurisation at 55 p.s.i. absolute is recommended for achieving a required degree of dissolution and if required a timer can be

incorporated to control this stage of the pressurisation following which pressurisation may be reduced automatically to the preferred dispensing pressure.

During dispensing the bag 18 will collapse as the beverage is withdrawn from it. When one of the bags is emptied its pressure vessel is exhausted by appropriate adjustment of the pressure control valve 16*a* and thereafter a new charged bag can be loaded in that vessel. During this period beverage can be withdrawn from the second pressure vessel while the beverage in the new bag attains its equilibrium condition ready to be dispensed in sequence.

Although the flexible material of the bags 18 will have a considerable toughness, there is always the possibility that a bag will leak or tear while in its pressure vessel. In this event it is merely necessary to remove the damaged bag, close and then pressurise the pressure vessel so that the beverage which lies in the bottom of the vessel is expelled through the tap 15 by way of the outlet 11—thereby avoiding the inconvenience of having to ladle the beverage from the body part 4 of the vessel.

CLAIMS

1. A compact unit for dispensing beverage containing gas in solution which comprises a pressure vessel having an outlet for communication with a dispensing tap; a flexible bag containing the beverage and gas which is to be dispensed, said bag being housed in the vessel; means for pressurising the pressure vessel for re-establishing a desired equilibrium of the beverage prior to dispensing so that gas which has come out of solution subsequent to the filling of the bag can be redissolved into the beverage and for dispensing the beverage from the bag, and wherein the pressure vessel is openable to receive the bag and its contents as a whole, said bag being delivered to the vessel in a sealed condition and coupling means is provided for connecting a sealed outlet port in the bag in fluid flow communication with the outlet of the pressure vessel.

2. A unit as claimed in claim 1 and comprising at least two said pressure vessels each having an outlet for communication with the dispensing tap; a selector valve for optionally opening and closing fluid flow communication between each outlet and the tap; at least two said flexible bags containing the beverage and gas which is to be dispensed, said bags being housed one in each vessel with the outlet ports in the bags being in fluid flow communication by said coupling means with the outlets of the respective pressure vessels, and wherein the means for pressurising permits each pressure vessel to be optionally presssurised for establishing the desired equilibrium in, and for the dispensing of, the beverage in the bag of that vessel.

3. A unit as claimed in either claim 1 or claim 2 in which the or each outlet is located substantially at a lowermost position in its pressure vessel.

4. A unit as claimed in any one of the preceding claims in which the or each pressure vessel is provided with a pressure relief valve which is located substantially at an uppermost position in its vessel.

5. A unit as claimed in any one of the preceding claims which comprises a compressor for pressurising the or each pressure vessel.

6. A unit as claimed in any one of claims 1 to 4 in which the means for pressurising the or each pressure vessel comprises a a means for coupling the unit to an external source of fluid under pressure such as a pressurised carbon dioxide, air or water line.

7. A unit as claimed in any one of the preceding claims in which the or each pressure vessel is openable to provide top loading (loading from above) of the bag or bags.

8. A unit as claimed in any one of claims 1 to 6 in which the or each vessel is openable to provide front (horizontal) loading of the bag or bags.

9. A unit as claimed in any one of the preceding claims in which the pressurisation of the vessel or vessels is adjustable from high pressure to expedite the rate of dissolution of the gas into the beverage prior to dispensing and low pressure for dispensing.

10. A unit as claimed in claim 9 in which the pressurisation of the vessel or vessels from high pressure to low pressure is effected automatically under time control.

11. A unit as claimed in any one of the preceding claims in which the sealed outlet port of the bag or bags comprises a membrane which is broken to permit dispensing of the beverage from that bag.

12. A unit as claimed in claim 11 in which the membrane is burst by the pressure of dispensing the beverage from the bag.

13. A unit as claimed in claim 11 in which the membrane is pierced by the coupling means during connection of the bag to the vessel outlet.

14. A unit as claimed in any one of the preceding claims in which the coupling means comprises a tubular socket component which receives a tubular spigot component to provide a sealed fluid connection, one of said components being on the bag and the other being in fluid flow communication with the vessel outlet.

15. A unit as claimed in claim 14 in which the said other component is connected to the outlet of its associated pressure vessel through a flexible tube which facilitates the coupling of the socket and spigot components prior to the bag being fully loaded into the pressure vessel.

16. A unit as claimed in either claim 14 or claim 15 when appendant to claim 13 in which the insertion of the tubular spigot component into the socket component causes the membrane to be pierced.

17. A unit as claimed in claim 16 in which the membrane is carried by the tubular spigot on the bag and the socket component carries a tubular needle which is protected by the wall of the socket and which pierces the membrane during the coupling of the socket and spigot components.

18. A unit as claimed in any one of the preceding claims and comprising means for cooling the bag or bags in their respective pressure vessels.

19. A unit as claimed in claim 18 in which the cooling means comprises a thermostatically controlled refrigeration system.

20. A unit as claimed in claim 19 in which the cooling of each bag is individually controlled.

21. A unit as claimed in either claim 19 or claim 20 in which the refrigeration system comprises cooling coils around the exterior of the pressure vessels.

22. A unit as claimed in any one of claims 18 to 21 in which cooling of the bags is to 8°C ro 12°C.

23. A unit as claimed in any one of the preceding claims in which the gas in the bag or bags comprises at least one gas selected from carbon dioxide and nitrogen.

24. A unit as claimed in any one of the preceding claims in which the beverage is fermented and comprises a stout, ale, lager or beer.

25. A unit as claimed in claim 24 when appendant to claim 23 in which one volume of beverage at 15°C and atmospheric pressure contains carbon dioxide which is present in the range 0.8 to 1.8 volumes and nitrogen which is present in the range 0.015 to 0.035 volumes.

26. A unit as claimed in any one of the preceding claims in which the or each bag has a beverage content in the range 2.5 to 10 litres.

27. A compact unit for dispensing beverage containing gas in solution substantially as herein described with reference to the accompanying illustrative drawings

Printed in the United Kingdom for
Her Majesty's Stationery Office, Dd 8818935, 1985, 4235.
Published at The Patent Office, 25 Southampton Buildings,
London, WC2A 1AY, from which copies may be obtained.