Sept. 25, 1934. A. BOUWERS 1,974,703

CYLINDRICAL X-RAY TUBE

Filed Oct. 10, 1931

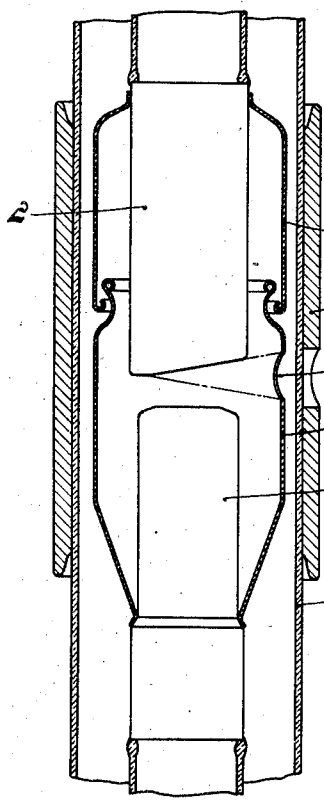

Fig. 1.

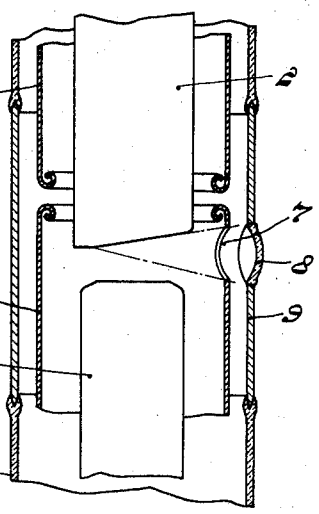

Fig. 2.

Inventor;
Albert Bouwers
by Lee B. Kemon
his Atty

Patented Sept. 25, 1934 1,974,703

UNITED STATES PATENT OFFICE

1,974,703

CYLINDRICAL X-RAY TUBE

Albert Bouwers, Eindhoven, Netherlands, assignor to N. V. Philips Gloeilampenfabrieken, Eindhoven, Netherlands

Application October 10, 1931, Serial No. 568,147
In Germany October 13, 1930

4 Claims. (Cl. 250—35)

This invention relates to an X-ray tube in which either the cathode or the anode, or both the electrodes, are provided with a metal screen or screens surrounding the electrode proper and the discharge gap between the electrodes.

A metallic cylinder, which in the form of a coating of the wall or an integral portion of the tube wall surrounds a portion of the electrodes, constitutes a plate common to two series connected condensers. The other plates of these condensers are constituted by the electrodes of the tube.

In accordance with the invention, the screen or screens are so shaped that the series connected condensers have substantially equal capacities. Preferably, the two electrodes are each provided with a screen, both screens being so proportioned as to have the same external diameter. This permits the tube to be constructed symmetrically to the highest degree.

Preferably, the two parts having the same capacity are brought as near as possible to the wall and to each other.

Owing to this arrangement, the potential of a metal coating embracing the tube or of a metal middle part of the tube wall is, when alternating voltages are used, automatically so adjusted that this coating or the metal middle part has the same potential differences relative to the electrode terminals of the tube.

By the arrangement described, a capacity connection is formed between the anode and the cathode across the metal coating or the metal part respectively, which connection is constituted to a certain extent by the electrostatic capacities between the anode and cathode and the surrounding sleeve forming two condensers connected in series, which, owing to the substantially equal capacities, distribute the voltage evenly so that each of the halves of the tube have to withstand the same potential difference.

In addition, owing to the presence of the screen surrounding the discharge path, the wall is prevented from receiving an electrostatic charge on its surface which would interfere with the potential distribution.

In order that the invention may be clearly understood and readily carried into effect, I have illustrated in the accompanying drawing two embodiments of the invention by way of example.

In the drawing:

Figure 1 is a sectional view of an X-ray tube embodying the invention;

Fig. 2 is a similar view of a modification.

Referring to Figure 1, the glass wall of the cylindrical X-ray tube is designated by 1, the anode by 2 and the cathode by 3. The cathode 3 has connected to it a screen 4 surrounding the discharge path and part of the anode. Similarly, the anode carries a screen 5, the cylindrical surface of which is in alignment with the outer surface of the screen 4. An envelope 6 of metal surrounds the middle part of the glass wall 1. Thus two condensers of substantially equal capacity and connected in series are formed. The electrodes of one of these condensers consist of the anode screen 5 and the metal coating 6 (ray protecting envelope) surrounding the glass tube, the glass wall of the tube forming part of the dielectric. The second condenser is formed by the metal coating 6 and the screen 4 with the intermediary gap. The screen 4 has an aperture 7 for the exit of the X-rays, which aperture may be, in some cases, closed by a thin plate to prevent the wall from becoming charged up and thus the potential distribution from being interfered with by electric particles emerging from the discharge space.

As shown in Fig. 2, the waist section of the tube may be constituted by a metal cylinder 9 sealed to the glass, said cylinder constituting in such case the coating common to the two series-connected condensers or forming part thereof. The cylinder 9 is provided with a portion 8, for example with a glass window sealed to said cylinder, which is pervious to X-rays.

What I claim is:—

1. An X-ray tube comprising an evacuated envelope and two electrode members disposed therein, said members being insulated from each other and spaced apart longitudinally to form a discharge gap, a conductive sleeve applied to the wall of the envelope and insulated from both electrode members, and a metal screen connected to one of the electrode members and surrounding the discharge gap, said conductive sleeve opposing said screen and that electrode member which is insulated from the screen so as to form with said screen and said electrode member respectively two series connected condensers of substantially equal capacities.

2. An X-ray tube comprising an evacuated envelope and two electrode members disposed therein, said members being insulated from each other and spaced apart longitudinally to form a discharge gap, and a conductive sleeve applied to said envelope and insulated from both electrode members, a metal screen secured to each of the electrode members, one of said screens surrounding the discharge gap, said conductive sleeve oppos-

ing said screens to form therewith two condensers of equal capacities.

3. An X-ray tube comprising an evacuated envelope and two electrode members mounted therein, said members being insulated from each other and spaced apart longitudinally to form a discharge gap, each electrode member being provided with a metal screen, one of said screens surrounding the discharge gap, said envelope comprising a metal portion extending along the said screens and being closely spaced therefrom to form with said screens two series connected condensers having substantially equal capacities.

4. An X-ray tube comprising an evacuated envelope of substantially cylindrical form, an anode and a cathode mounted therein, said anode comprising a rod-shaped portion and a metal jacket secured thereto, and a metal jacket connected to the cathode extending longitudinally over a part of the rod-shaped portion of the anode, both jackets being co-axially disposed in the envelope and having equal cylindrical areas, said jackets being closely spaced to the wall of the envelope.

ALBERT BOUWERS.