Dec. 24, 1935. L. H. MOULTHROP 2,025,214

ELECTRICAL OUTLET FIXTURE

Filed Feb. 12, 1935

Fig. 1.

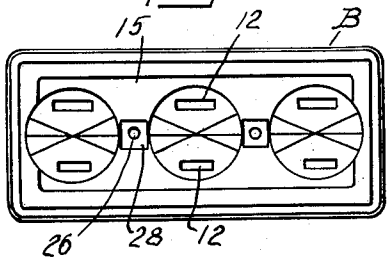

Fig. 2.

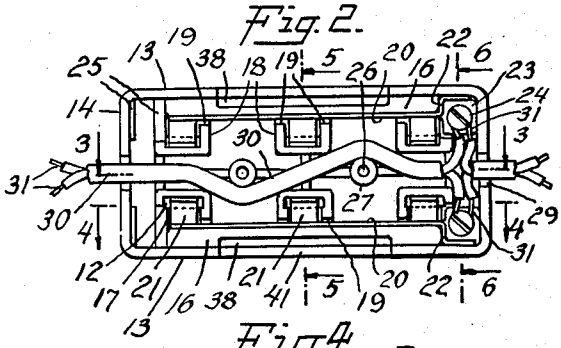

Fig. 3.

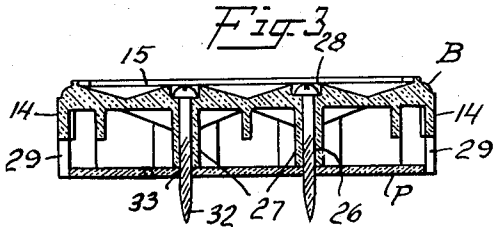

Fig. 4.

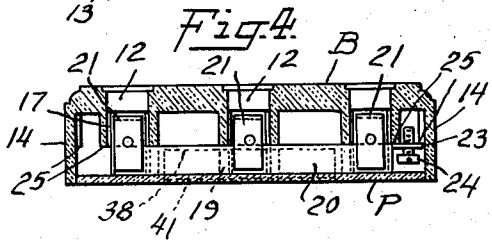

Fig. 5.

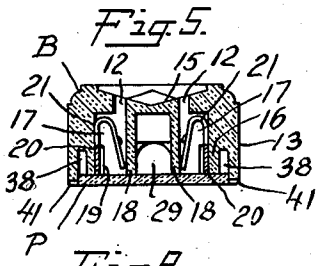

Fig. 6.

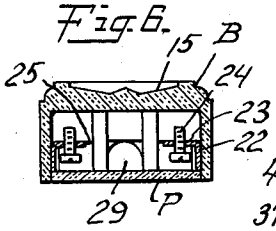

Fig. 7.

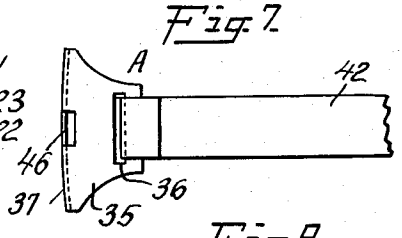

Fig. 8.

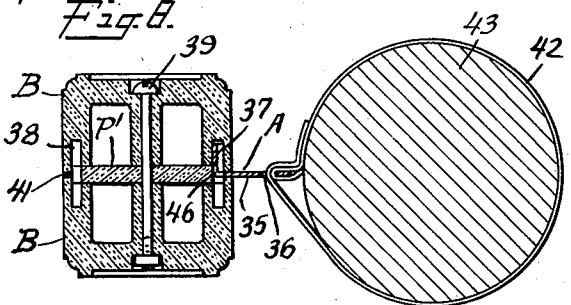

Fig. 9.

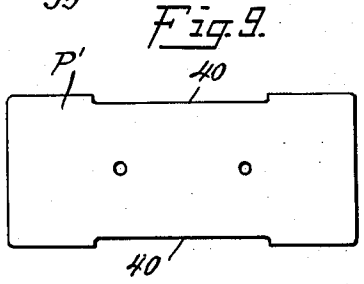

Fig. 10.

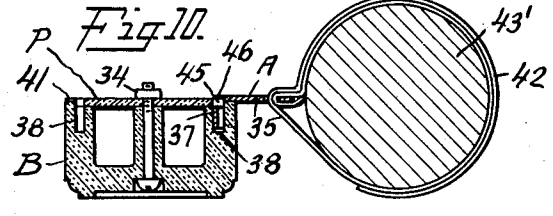

Fig. 11.

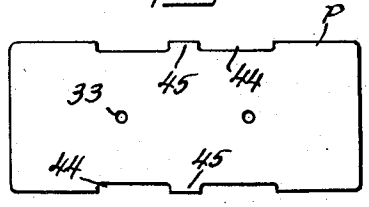

INVENTOR

Lambert H. Moulthrop

BY

Pennie, Davis, Marvin & Edmonds

HIS ATTORNEYS

Patented Dec. 24, 1935

2,025,214

UNITED STATES PATENT OFFICE

2,025,214

ELECTRICAL OUTLET FIXTURE

Lembert H. Moulthrop, South Norwalk, Conn., assignor to Raylite Trading Company, Inc., New York, N. Y., a corporation of New York

Application February 12, 1935, Serial No. 6,170

4 Claims. (Cl. 173—334)

This invention relates to electrical outlet fixtures and more particularly concerns outlet fixtures of the type adapted to receive the current conducting blades of attachment plugs connected to lights or other electrical appliances.

Electric current for extension lights or other portable electrical appliances used in buildings is usually conducted from a suitable source to an outlet box or equivalent fixture permanently installed in the baseboard, wall or floor of a room. It is frequently desirable to provide outlet fixtures which may be readily secured to a surface support, such as a baseboard, wall or floor, without cutting an opening in the supporting surface, such fixtures being wired to previously installed outlet boxes or other sources of current by means of an exposed insulated cord. It is also desirable in some cases to provide portable outlet fixtures which may be used on tables or floors or in other temporary locations, such portable fixtures being wired to a permanent wall or floor outlet box by a suitable flexible cord and attachment plug.

The present invention has for its object the provision of an improved electrical outlet fixture of the type adapted for either surface mounting or portable use. Another object of the invention comprises the provision of an outlet fixture and simplified attachment means cooperating therewith for securing the fixture to a Christmas tree or other temporary support.

The improved outlet fixture of my invention comprises generally a casing or body portion provided with one or more pairs of spaced openings for the reception of the contact blades of attachment plugs, the construction and arrangement of the body portion being such that a current conducting cord or cable may pass therethrough from end to end thereof without interruption and without increasing the size of the body portion beyond that required to accommodate the plug contact blades inserted in the body and the terminal clips within the body which engage these blades. A closure member is provided for the rear face of the fixture, and in accordance with one aspect of the invention, I provide a simple form of attachment means cooperating with the body portion and closure member and serving to secure the fixture to a support such as a Christmas tree, on or adjacent which electric lights or other electrical devices are to be used. I prefer to construct the improved outlet fixture and attaching means in such a manner that the number of electrical outlets provided may be varied.

In describing the invention, reference will be made to the accompanying drawing in which an embodiment thereof has been shown. In the drawing;

Figure 1 is a plan view of an outlet fixture embodying the invention;

Figure 2 is a rear plan view of the outlet fixture with the closure member removed;

Figures 3 and 4 are sectional views, taken respectively along the lines 3—3 and 4—4 of Figure 2 and viewed in the direction of the arrows;

Figures 5 and 6 are sectional views, taken respectively along the lines 5—5 and 6—6 of Figure 2 and viewed in the direction of the arrows;

Figure 7 is a plan view of the outlet fixture attachment means of my invention;

Figure 8 is a sectional view showing one form of my improved outlet fixture secured to a support;

Figure 9 is a plan view of the closure member of the outlet fixture shown in Figure 8;

Figure 10 is a sectional view showing another form of outlet fixture embodying the invention attached to a support; and

Figure 11 is a plan view of the closure member of the outlet fixture shown in Figure 10.

The embodiment of my improved outlet fixture shown in the drawing, comprises generally a substantially hollow casing or body portion B preferably formed of molded insulating material, and a back closure member or plate P therefor, preferably formed of fibre board or other suitable insulating material. The body portion B is provided on its front face plate 15 with a plurality of pairs of slots or openings 12 for the reception of the usual contact blades of attachment plugs. Any desired number of pairs of plug blade slots may be provided and in the disclosed embodiment, three pairs of slots are used.

As best shown in Figures 2 to 6, the body portion B is hollow, having connected side walls 13 and end walls 14 extending rearwardly from the front face plate 15 through which the plug blade slots 12 are formed. The rearward face of the body portion B is open to give access to the interior thereof whereby the electrical connections may be made. The side walls 13 are provided with inwardly extending enlargements 16, the longitudinal ends of which terminate short of the end walls 14, as shown in Figure 2, and the rearward edges of which terminate short of the rear edges of the side walls 13, as shown in Figure 5.

A rearwardly extending insulated recess or pocket 17 is provided within the body portion B in communication with each of the plug blade

slots 12, each recess being formed by an insulating wall 18 extending from the front face plate 15 to a point flush with the rearward edges of the side wall enlargements 16, as shown in Figure 5. The recesses 17 are considerably wider than the slots 12, and the slots are flush with the inside walls of the recesses, as shown in Figures 2 and 5. Oppositely disposed aligned openings or slots 19 are provided in the walls 18 of the recesses 17 along the outer sides thereof, as shown in Figure 2, and these openings extend to the rearward edges of the recess walls 18.

A bus bar or conducting strip 20 extends through the aligned openings 19 on each side of the body portion B and carries a plurality of U-shaped spring terminal clips 21, each of which extends into one of the recesses 17, as shown in Figures 2, 4 and 5. In this manner, a spring terminal clip 21 is disposed behind each slot 12 for engagement with an attachment plug contact blade inserted through the slot. One end of each of the bus bars 20 is off-set, as shown at 22, about one end of the adjacent side wall enlargement 16, and is provided with a horizontal extension 23 carrying a screw or binding post 24, as shown in Figures 2, 4 and 6. The extension 23 is supported by suitable shoulders or abutments 25, as shown in Figures 4 and 6.

Two spaced central bolt or screw holes 26 are provided through the body portion B and the rearwardly extending posts 27 thereof, as clearly shown in Figure 3, whereby bolts, screws or other fastening devices may be passed through but insulated from the interior of the body portion. The holes 26 are preferably countersunk, as shown at 28, in the front plates 15 of the body. Each end wall of the body B is provided with a central cord opening 29 extending to the rearward edge, as shown. The insulating rear plate or closure member P is formed to fit within the side and end walls 13 and 14 of the body portion B and to rest against the rearward edges of the side wall enlargements, the recess walls 18 and posts 27, as shown in Figures 3 and 5.

The described outlet fixture may be used as a surface-mounted or portable device, as desired. With the closure member P removed, the current supplying cord or cable 30 is passed through the opening 29 at the end of the body portion B remote from the bus bar binding posts 24 and is bent laterally to pass around opposite sides of the two central posts 27. The two wires 31 of the cord 30 are bared and respectively secured beneath the opposite binding posts 24 and if it is desired that the cord 30 extend beyond the fixture to other fixtures or appliances, the wires 31 are not severed but continue into the cord 30 and pass out through the end wall opening 29 adjacent the binding posts 24. The closure member P is then fitted in place and if the device is to be mounted on a surface, suitable screws 32 are passed through the holes 26 and through aligned holes 33 in the closure member P, and into the baseboard, floor wall or other surface carrying the device. The closure member P holds the bus bars 20 and the terminal clips 21 in place within the body portion. If a portable outlet fixture is desired, the closure member P may be connected directly to the body portion B by suitable means such as bolts and nuts, as indicated at 34 in Figure 10.

In accordance with one aspect of my invention, improved means are provided for attaching the outlet fixture to a support such as a column or post, or the trunk or branch of a Christmas tree. It is frequently desired to provide a Christmas tree or other decorative object with a plurality of miniature electric lamps which are customarily connected in series circuits. Frequently, a plurality of such series lamp circuits are required, and a multiple outlet fixture attached to the tree or other object at a central point permits the convenient and symmetrical arrangement of the series lamp circuits on the decorative object.

My improved attachment means comprises generally an element detachably secured to the outlet fixture body by the closure plate or other closure member thereof, together with means on the element for attaching it to a tree trunk, branch or other support. As shown in Figures 7 and 8, the element A engaging the outlet fixture comprises a plane part 35 having a slot 36 therethrough adjacent the outer end thereof, and carrying a curved flange 37 at right angles to the part 36 along the inner end thereof. A narrow slot 38 is provided in each side wall enlargement 16 of the outlet fixture body B, each of these slots being of a length and depth sufficient to accommodate the angular flange 37 of the attachment element A. The element A is preferably formed of resilient metal and the curvature of the flange 37 is so related to the width of the slot 38 that a firm engagement is secured, one side of the slot being engaged by one surface of the flange at the ends thereof and the central portion of the opposite side of the flange engaging the other side of the slot.

The attachment element A may be locked within one of the slots 38 in various ways. As shown in Figure 8, two of the outlet fixture bodies B may be secured together with a closure member P' of double thickness therebetween, suitable bolts and nuts being employed to fasten the bodies together, as shown at 39. As shown in Figure 9, the sides of the closure member P' are recessed or cut back at 40 by an amount sufficient to clear the slots 38 in the body portions, thus permitting the flange 37 of the attachment element A to enter one of the slots 38. The rearward edges of the side walls 13 of the bodies B are provided with similar recesses 41 which cooperate to provide a space between the parts through which the plane part 35 of the attachment element may pass. When the body portions B are connected together, the flanged attachment element A is securely locked therebetween with the flange 37 in one of the slots 38.

Various means may be provided for fastening the attachment element A to the desired support. In the disclosed embodiment, a strap 42 of light and readily bendable metal is used for this purpose and is fixed adjacent one end in the slot 36 in the element A. The strap 42 is passed completely around the Christmas tree trunk or branch or any other similar support represented at 43, and is then threaded through the slot 36 and bent down sharply against the plane portion 35 of the element A, as shown in Figures 8 and 10. With this arrangement, the attachment element may without change be secured to tree trunks or other supports of various peripheral dimensions, and if a smaller support 43' is provided, the end of the strap 42 is merely wrapped around the support, as shown in Figure 10.

If it is desired to employ one outlet body section B only, a closure member P of the type shown in Figure 11 is employed. This closure member has side edge cut-out portions or recesses 44 with central lugs 45 therein. An opening 46 is formed in the attachment element A centrally of the

flange 37 and at the point of juncture between the flange 37 and the plane part 35, as shown in Figures 7, 8 and 10. After the flange 37 has been inserted in the body slot 38, the closure member P is secured in place by the fastening means 34 and the lug 45 enters the opening 46 and bears on the flange 37 at the bottom of this opening, thereby locking the attachment element in place.

The outlet fixture of the invention is very compact due particularly to the fact that the cord 30 passes between the terminal clips 21 so that the body of the fixture need not be appreciably deeper or wider than the dimensions imposed by the size and spacing of the contact blades of an attachment plug. The central posts 27 surrounding the openings 26 through the fixture body cooperate with the walls 18 of the terminal clip recesses 17 to frictionally engage the cord 30 and thus relieve the binding posts 24 of any strain imposed on the cord. The attachment means is simple and sturdy and the manner in which it is secured to the outlet fixture permits the use of one or two outlet bodies, as desired.

I claim:

1. In an electrical outlet fixture, in combination, a body portion comprising a front face plate having attachment plug blade openings therethrough, walls extending rearwardly from said face plate, said body portion having an access opening between the rearward edges of said walls and a rearwardly opening slot in the rearward edge of at least one of said walls, an element having a flange extending into said slot and a part extending outwardly from said body portion at an angle to said flange over the rearward edge of the wall carrying said slot, means detachably connected to said body portion over said access opening in locking engagement with said element and means for connecting the outwardly extending part of said element to a support.

2. In an electrical outlet fixture, in combination, a body portion comprising a front face plate having attachment plug blade openings therethrough, walls extending rearwardly from said face plate, said body portion having an access opening between the rearward edges of said walls, an attachment element including a flange extending within said body portion and a part extending at an angle to said flange outwardly from said body portion over the rearward edge of one of said walls, said attachment element having an opening therein, a rear closure plate removably connected to said body portion over said access opening and an extension on said closure plate entering said opening in said attachment element and locking said attachment element to said body portion.

3. In an electrical outlet fixture, in combination, a body portion comprising a front face plate having attachment plug blade openings therethrough, walls extending rearwardly from said face plate, said body portion having an access opening between the rearward edges of said walls, an attachment element having a part extending within said body portion, means for securing said attachment element to a support, a rear closure plate removably connected to said body portion over said access opening and means on said closure plate for locking said attachment element part within said body portion.

4. In an electrical outlet fixture, in combination, a body portion comprising a front face plate having attachment plug blade openings therethrough, walls extending rearwardly from said face plate, said body portion having an access opening between the rearward edges of said wall and a rearwardly opening slot in the rearward edge of at least one of said walls, an attachment element including a flange extending into said slot and a part extending at an angle to said flange outwardly from said body portion over the rearward edge of the wall carrying said slot, said attachment element having an opening therein adjacent said slot, a rear closure plate removably connected to said body portion over said access opening and a lug on said closure plate entering said opening in said attachment element and locking said flange in said slot.

LEMBERT H. MOULTHROP.