US 20030192836A1

(19) United States

(12) Patent Application Publication

(10) Pub. No.: US 2003/0192836 A1

(43) Pub. Date: Oct. 16, 2003

Ulrich

(54) ATTIC-MOUNTED STORAGE COMPARTMENT AND METHOD THEREFOR

(76) Inventor: **William J. Ulrich**, Boulder City, NV (US)

Correspondence Address:
WEISS & MOY PC
4204 NORTH BROWN AVENUE
SCOTTSDALE, AZ 85251 (US)

(21) Appl. No.: 10/118,694

(22) Filed: Apr. 10, 2002

Publication Classification

(51) Int. Cl.[7] A47F 7/00

(52) U.S. Cl. 211/20; 211/117

(57) ABSTRACT

An attic mounted storage compartment, comprising a housing having an opening at a lower portion thereof. The compartment is adapted to be mounted between two neighboring ceiling joists, so that storage items may be raised therethrough for positioning within the housing. The compartment includes a lift apparatus, which is used to lift storage items into the housing. The lift apparatus may be manually operated or motor driven. Two preferred types of storage items useable with the compartment are bicycles and storage boxes sized to conform to the general shape and size of the housing.

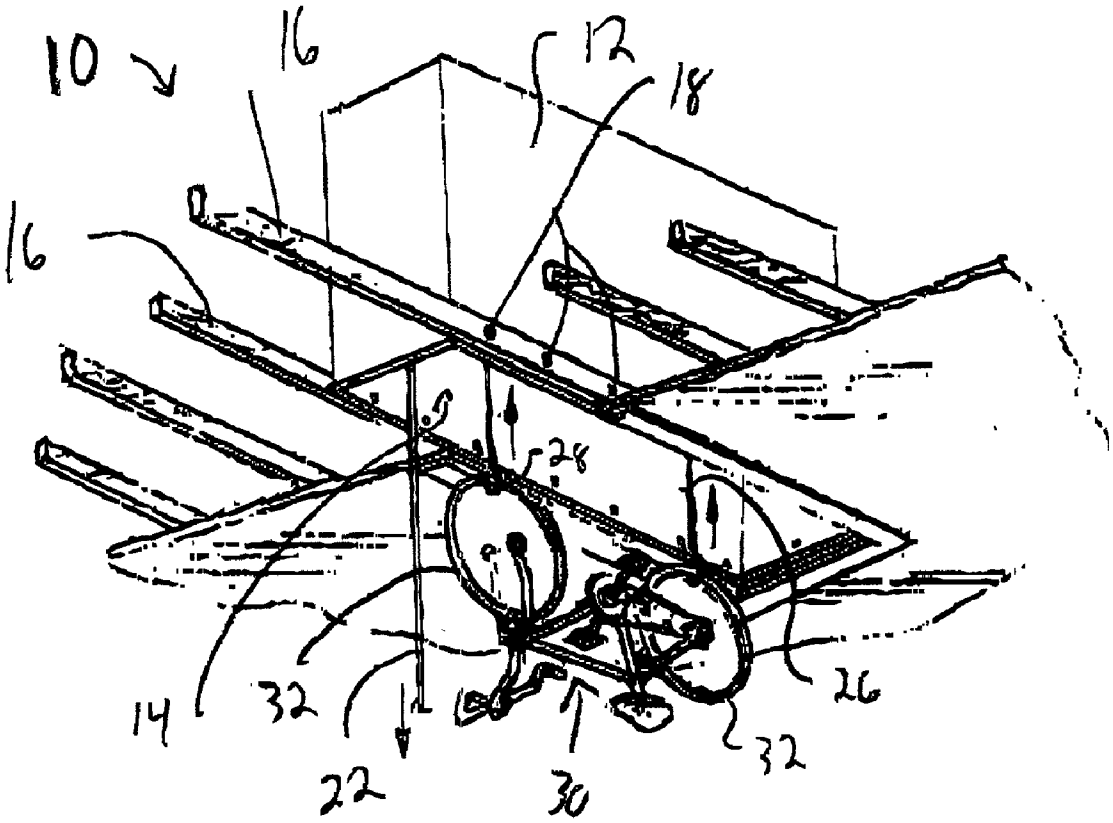

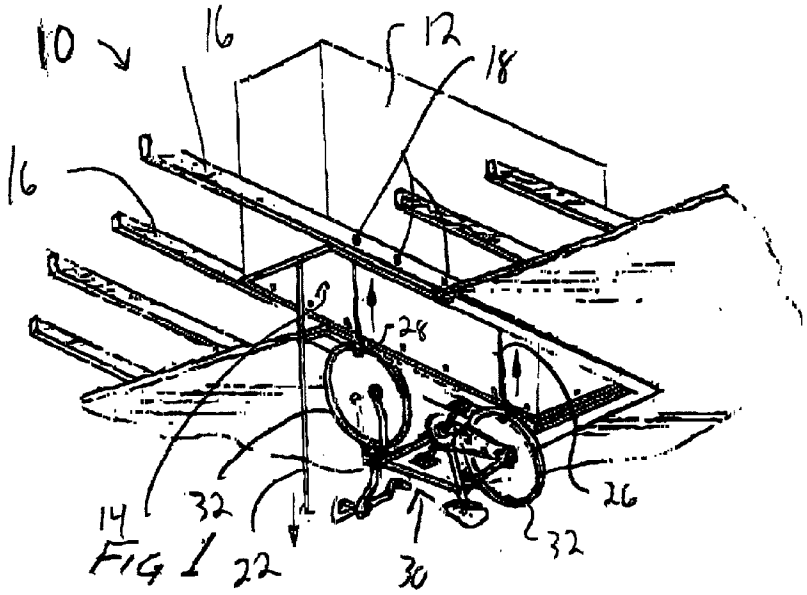

FIG 1

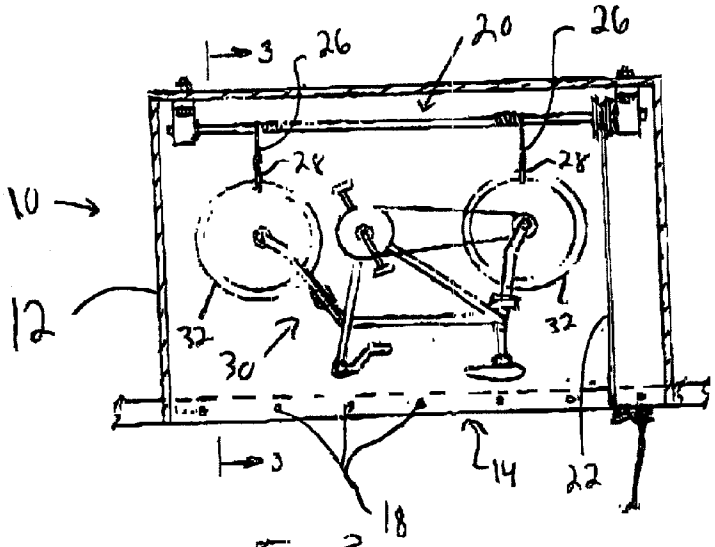

FIG 2

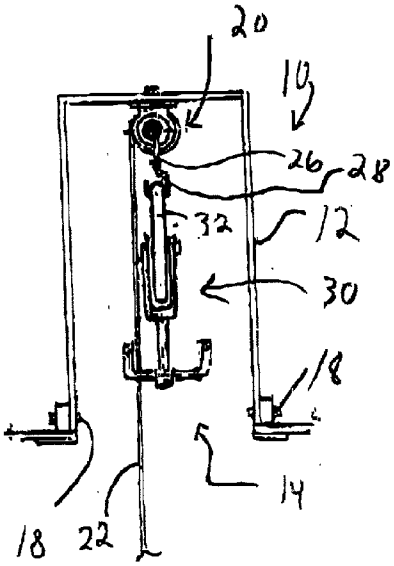

FIG 3

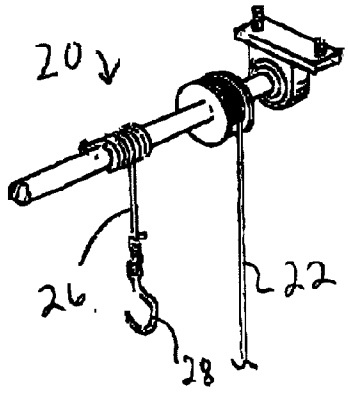

FIG. 4

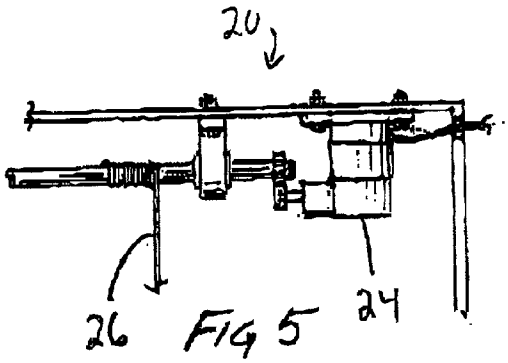

FIG 5

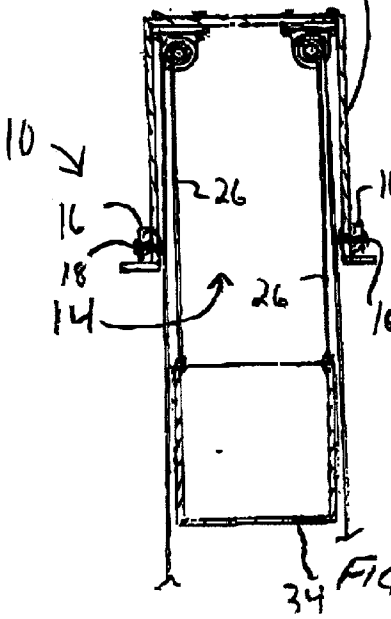

FIG 7

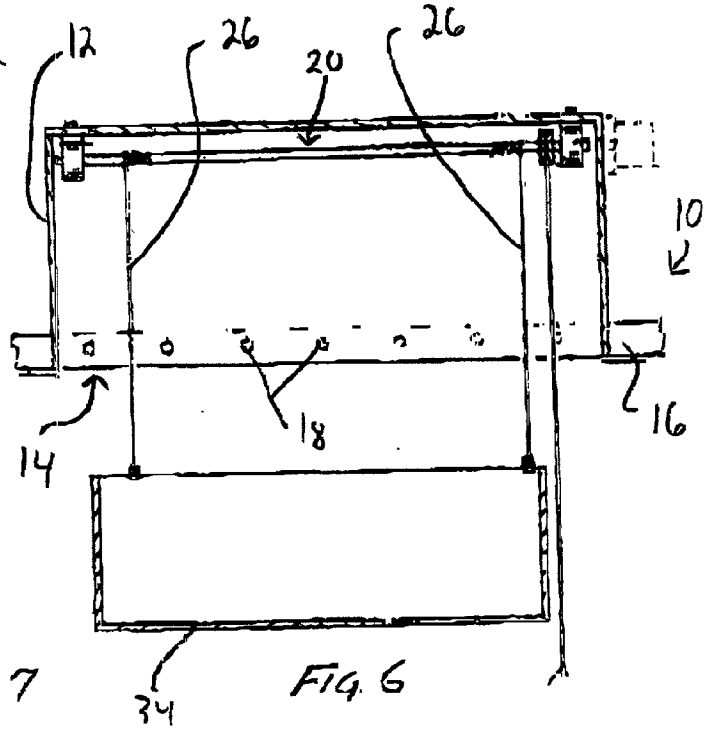

FIG. 6

ATTIC-MOUNTED STORAGE COMPARTMENT AND METHOD THEREFOR

BACKGROUND OF THE INVENTION

[0001] 1. Field of Invention

[0002] This invention relates generally to storage compartments and, more specifically, to a storage compartment mountable in an attic and adapted to permit a user to conveniently raise and lower stored items between the ground below the storage compartment and the storage compartment.

[0003] 2. Background of the Invention

[0004] Attics are commonly used for storage. They can provide useful space to hold little-used items; however, access to an attic is not always convenient. For example, it is often necessary to utilize a ladder to enter an attic through an opening in a ceiling. This can be difficult and, where the item to be stored is heavy and/or large, uncomfortable or even dangerous. The difficulty in obtaining safe and convenient access to an attic causes the under-utilization of this important household asset.

[0005] A need therefore existed for an attic-mounted storage compartment and method that permits the safe and effective use of attic storage space. The compartment and method should permit a user to place items in storage, and to remove them from storage, without the need for a ladder or otherwise having to physically enter the storage space. The compartment and method should preferably require only relatively minimal physical exertion to utilize. The compartment and method should further permit use in a manner consistent with the existing roof structure, and should permit the insertion of storage items through the existing joists. The present invention satisfies these needs and provides other, related advantages.

SUMMARY OF THE INVENTION

[0006] It is an object of the present invention to provide an attic-mounted storage compartment and method that permits the safe and effective use of attic storage space.

[0007] It is a further object of the present invention to provide an attic-mounted storage compartment and method that permit a user to place items in storage, and to remove them from storage, without the need for a ladder or otherwise having to physically enter the storage space.

[0008] It is a still further object of the present invention to provide an attic-mounted storage compartment and method that require only relatively minimal physical exertion to utilize.

[0009] It is a yet further object of the present invention to provide an attic-mounted storage compartment and method that cooperates with the existing roof structure, and that permits the insertion of storage items through the existing joists.

BRIEF DESCRIPTION OF THE PREFERRED EMBODIMENTS

[0010] In accordance with one embodiment of the present invention, an attic mounted storage compartment is disclosed. It comprises, in combination: a housing dimensioned to fit within an attic above ceiling joists; wherein said housing has an opening at a lower portion thereof, wherein said opening has a width of two neighboring said ceiling joists; means for coupling said housing to said neighboring ceiling joists; a lift apparatus positioned proximate an upper portion of said housing; and at least one lift line coupled at one end to said lift apparatus and being adapted to be coupled at a second end thereof to a storage item.

[0011] In accordance with another embodiment of the present invention, a method for storing items in an attic mounted storage compartment is disclosed. The method comprises the steps of: providing a housing dimensioned to fit within an attic above ceiling joists; wherein said housing has an opening at a lower portion thereof, wherein said opening has a width of two neighboring said ceiling joists; coupling said housing to said neighboring ceiling joists; providing a lift apparatus positioned proximate an upper portion of said housing; providing at least one lift line coupled at one end to said lift apparatus and being adapted to be coupled at a second end thereof to a storage item; coupling said second end of said at least one lift line to said storage item; and lifting said storage item until said storage item is within said housing.

[0012] The foregoing and other objects, features, and advantages of the invention will be apparent from the following, more particular, description of the preferred embodiments of the invention, as illustrated in the accompanying drawings.

BRIEF DESCRIPTION OF THE DRAWINGS

[0013] **FIG. 1** is a perspective view of an embodiment of the attic-mounted storage compartment of the present invention.

[0014] **FIG. 2** is a side, cut-away view of the attic-mounted storage compartment of **FIG. 1**.

[0015] **FIG. 3** is an end, cut-away view of the attic-mounted storage compartment of **FIG. 1**.

[0016] **FIG. 4** is a perspective view of an embodiment of the pulley portion of the attic-mounted storage compartment of **FIG. 1**.

[0017] **FIG. 5** is a side view of an embodiment of the pulley portion of the attic-mounted storage compartment of **FIG. 1**.

[0018] **FIG. 6** is a side, cut-away view of another embodiment of the attic-mounted storage compartment of the present invention.

[0019] **FIG. 7** is an end, cut-away view of another embodiment of the attic-mounted storage compartment of the present invention.

DETAILED DESCRIPTION OF THE PREFERRED EMBODIMENTS

[0020] Referring first to FIGS. **1-3** and **6-7**, reference number **10** refers generally to an embodiment of an attic-mounted storage compartment (hereinafter "compartment **10**") of the present invention. The compartment **10** generally comprises a storage housing **12**, in which items to be stored will be housed. The storage housing **12** has an opening **14**, through which storage items are inserted. The housing may

be made of any desired material, though a one-piece molded plastic construction will be preferred—so as to impart durability without making the housing unduly heavy.

[**0021**] The opening **14** is preferably sized so that it is the width of standard ceiling joists **16**. These are typically 1.5 inches wide and spaced 24 inches apart on center, though some have a different spacing, such as 16 inches on center. (Because the opening **14** should be fitted between the joists **16** as shown by way of example in **FIG. 1**, the external width of the opening **14** should be approximately 22.5 inches.) Accordingly, the opening **14** may be provided in a variety of widths, to accommodate the particular joist width present where installation is to take place. It may be possible to provide an opening **14** having a width greater than that of neighboring joists **16**. With such a sizing, however, it will be necessary to appropriately support the ceiling structure as portions of the joists **16** are removed to make room for the opening **14**, and it can be seen that such an installation will generally be less-convenient and thus less preferred. The height of the housing **12** may be any size that will fit within the available attic space, though a height of about three feet will be preferred for most applications.

[**0022**] The housing **12** should be coupled to the joists **16** in a secure manner. Such coupling is preferably accomplished through the insertion of a plurality of wood screws or bolts **18** through each of the housing **12** and joists **16**. Where heavier storage items may be positioned within the housing **12**, it may be desired to provide supplement bracing (not shown).

[**0023**] The compartment **10** further utilizes a lift apparatus **20**, which permits a user to lift a storage item into the housing **12**. Referring first to FIGS. **1-4** and **6**, the lift apparatus **20** can be a pulley system. Where this type of mechanism is employed, it may be desired to provide a pulley system having a locking feature, like that employed on window blinds, so that a user may pull on a cord **22** to raise the storage item and then, when the storage item is in the desired position within the housing **12**, move the cord **22** to the side so as to engage the locking feature and thereby secure the storage item in position.

[**0024**] Referring now to **FIG. 5**, it may also be desired to provide a lift apparatus **20** driven by a motor **24**, rather than by manually-applied pulling force. Where a motor **24** is used to drive the lifting apparatus **20**, the motor **24** should be reversible, so as to be able to selectively lift or lower the storage item. A remote control, switch (not shown) or other selector means will be provided, permitting a user to activate the motor **24** and to operate it in the desired direction and in the desired amount. However driven, the lift apparatus **20** further comprises at least one and preferably two lift lines **26**.

[**0025**] It should be noted that while it is preferred to position the lift apparatus **20** within the housing **12**, it would also be possible to position the lift apparatus **20** outside and above the housing **12**, with the lift lines **26** passing through openings (not shown) in the housing **12**.

[**0026**] The compartment **10** is particularly well adapted for two storage use. Referring first to FIGS. **1-3**, the compartment **10** is can be used to lift and store a bicycle **30**. For such use, it will generally be desired to attach a hook **28** at the end of each lift line **26** to grasp the bicycle wheels **32**. Thus, as shown herein, it will generally be desired to invert the bicycle **30**, attach each hook **28** to a bicycle wheel **32**, and to thereafter lift the bicycle **30** until it is in the housing **12**, and thereafter to secure it in position. When needed, the bicycle **30** is lowered with the lift apparatus **20**. Although not preferred, it would also be possible to attach the lift lines **26** to another portion of the bicycle **30**—such as the frame, handlebar and/or seat—when the bicycle **30** is in an upright position, and in such configuration to then lift the bicycle **30**.

[**0027**] As shown in FIGS. **6-7**, it may also be desired to utilize the compartment **10** with a storage box **34**. Preferably, the storage box **34** is configured to conform to the size and shape of the housing **12**, so that advantage can be maximally taken of the storage space provided by the housing **12**. The box **34** is preferably open at an upper portion thereof, and is coupled to the lift lines **26**. When it is desired to utilize the box **34** for storage, it will be lowered to the ground, and storage items will be inserted through the opening in the box **34**. When the storing process is completed, the box **34** will be raised until it is within the housing **12**, with the base of the box **34** acting as a covering for the opening **14**.

[**0028**] While the invention has been particularly shown and described with reference to preferred embodiments thereof, it will be understood by those skilled in the art that the foregoing and other changes in form and details; may be made therein without departing from the spirit and scope of the invention.

I claim:

1. An attic mounted storage compartment comprising, in combination:

a housing dimensioned to fit within an attic above ceiling joists;

wherein said housing has an opening at a lower portion thereof, wherein said opening has a width of two neighboring said ceiling joists;

means for coupling said housing to said neighboring ceiling joists;

a lift apparatus positioned proximate an upper portion of said housing; and

at least one lift line coupled at one end to said lift apparatus and being adapted to be coupled at a second end thereof to a storage item.

2. The attic mounted storage compartment of claim 1 wherein said lift apparatus is comprises a manually-operated pulley.

3. The attic mounted storage compartment of claim 1 wherein said lift apparatus is motor-driven.

4. The attic mounted storage compartment of claim 1 wherein said storage item is a bicycle.

5. The attic mounted storage compartment of claim 1 wherein said storage item is a box.

6. The attic mounted storage compartment of claim 1 wherein said opening for said housing has an external width of approximately 22,5 inches and a height of approximately 3 feet.

7. A method for storing items in an attic mounted storage compartment, comprising the steps of:

providing a housing dimensioned to fit within an attic above ceiling joists;

wherein said housing has an opening at a lower portion thereof, wherein said opening has a width of two neighboring said ceiling joists;

coupling said housing to said neighboring ceiling joists;

providing a lift apparatus positioned proximate an upper portion of said housing;

providing at least one lift line coupled at one end to said lift apparatus and being adapted to be coupled at a second end thereof to a storage item;

coupling said second end of said at least one lift line to said storage item; and

lifting said storage item until said storage item is within said housing.

8. The method of claim 7 wherein said lift apparatus is comprises a manually-operated pulley.

9. The method of claim 7 wherein said lift apparatus is motor-driven.

10. The method of claim 7 wherein said storage item is a bicycle.

11. The method of claim 7 wherein said storage item is an upwardly-open storage box.

12. The method of claim 10 further comprising the steps of:

providing two said lift lines;

providing a hook at each said second end of said two lift lines;

coupling each said hook to a bicycle; and

raising said bicycle until it is positioned within said housing.

13. The method of claim 11 further comprising the steps of:

lowering said upwardly-open storage box;

positioning items within said upwardly-open storage box;

raising said upwardly-open storage box until it is positioned with said housing.

14. The method of claim 7 wherein said opening for said housing has an external width of approximately 22.5 inches and a height of approximately 3 feet.

* * * * *