Office de la Propriété Intellectuelle du Canada
Un organisme d'Industrie Canada

Canadian Intellectual Property Office
An agency of Industry Canada

CA 2090195 C 2004/09/14

(11)(21) 2 090 195

(12) BREVET CANADIEN
CANADIAN PATENT

(13) C

(22) Date de dépôt/Filing Date: 1993/02/23

(41) Mise à la disp. pub./Open to Public Insp.: 1993/08/29

(45) Date de délivrance/Issue Date: 2004/09/14

(30) Priorités/Priorities: 1992/02/28 (92/1507) ZA; 1992/02/28 (92/1506) ZA; 1992/02/28 (92/1505) ZA; 1992/02/28 (92/1504) ZA; 1992/02/28 (92/1503) ZA; 1992/02/28 (92/1502) ZA; 1992/02/28 (92/1501) ZA; 1992/02/28 (92/1500) ZA; 1992/05/11 (880,669) US; 1992/05/11 (880,668) US; 1992/05/11 (880,667) US; 1992/05/11 (880,666) US; 1992/05/11 (880,665) US; 1992/05/11 (880,664) US; 1992/05/11 (880,663) US; 1992/05/11 (880,662) US

(51) Cl.Int.^{5}/Int.Cl.^{5} E04H 4/16, F01C 19/08

(72) Inventeur/Inventor:
SEBOR, PAVEL, ZA

(73) Propriétaire/Owner:
SEBOR, PAVEL, ZA

(74) Agent: MACRAE & CO.

(54) Titre : ASPIRATEUR SUBMERSIBLE AUTOMOTEUR
(54) Title: SELF PROPELLED SUBMERSIBLE SUCTION CLEANER

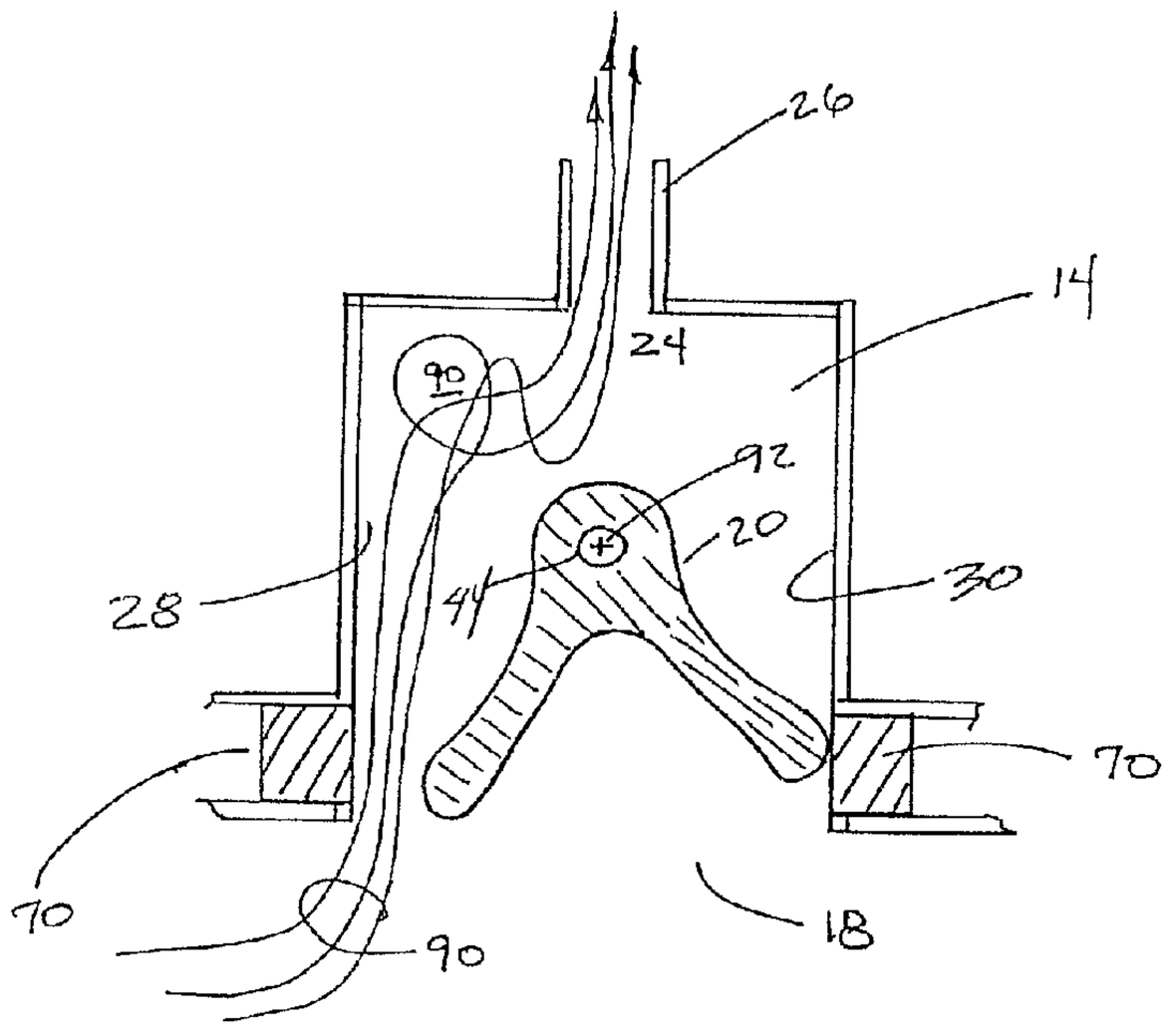

(57) Abrégé/Abstract:
A self-propelled submersible suction cleaner as used to clean the surfaces of a swimming pool transfers a vibratory movement of an oscillator located within the flow path of a suction chamber for propulsion over the submerged surface of the pool. This vibratory movement of the oscillator is also converted to a unidirectional rotational motion used in conjunction with a gear train to cause the cleaner to rotate through at least a 90 angle allowing the cleaner to improve on the random path taken by the cleaner and to maneuver away from obstacles such as pool steps potentially stopping the cleaner movement. The cleaner includes a elevation limiter that keeps the suction chamber submerged as the cleaner climbs a vertical wall and attempts to rise above the water level in the pool. A pressure relief valve eliminates the concern over debris blocking the suction and causing potential damage to the pool pump and motor. Additional features including a shoe dimensioned to improve the forward movement resulting from the vibratory motion, shoe skirts in combination with a shoe flap to control suction, and bellows configurations to aid in better execution of sharp turns up a vertical wall as well as a smoother movement of the cleaner are disclosed.

ABSTRACT OF THE DISCLOSURE

A self-propelled submersible suction cleaner as used to clean the surfaces of a swimming pool transfers a vibratory movement of an oscillator located within the flow path of a suction chamber for propulsion over the submerged surface of the pool. This vibratory movement of the oscillator is also converted to a unidirectional rotational motion used in conjunction with a gear train to cause the cleaner to rotate through at least a 90 angle allowing the cleaner to improve on the random path taken by the cleaner and to maneuver away from obstacles such as pool steps potentially stopping the cleaner movement. The cleaner includes a elevation limiter that keeps the suction chamber submerged as the cleaner climbs a vertical wall and attempts to rise above the water level in the pool. A pressure relief valve eliminates the concern over debris blocking the suction and causing potential damage to the pool pump and motor. Additional features including a shoe dimensioned to improve the forward movement resulting from the vibratory motion, shoe skirts in combination with a shoe flap to control suction, and bellows configurations to aid in better execution of sharp turns up a vertical wall as well as a smoother movement of the cleaner are disclosed.

SELF PROPELLED SUBMERSIBLE SECTION CLEANER AND METHOD

1. Field of the Invention

The invention generally relates to suction cleaners for use on surfaces submerged in a liquid. The suction cleaner is attached to a flexible hose and pump for its source of suction. The invention relates to a device for automatically cleaning the submerged surfaces of swimming pools and the like.

2. Description of Background Art

Self-propelled suction cleaners are customarily used for cleaning the submerged surfaces of pools and in particular, swimming pools having various surface finishes and contoured shapes. Various techniques have been employed in the mechanisms that drive these self-propelled cleaners. Three of the more common mechanisms use either a shut off valve, turbine drive or drive wheels. In some cases, combinations of these mechanisms are used.

The United States Patent No. 4,536,908 issued to Johann N. Raubenheimer on August 27, 1985 discloses a suction cleaner for a swimming pool that is supported on a bogie or truck assembly with inclined supporting feet. The bogie assembly

is mechanically rocked by means of a turbine through which water is pulled by suction to cause the cleaner to move. In order to change the direction of path of the cleaner, a second turbine drives a hose connection at the top of the cleaner in opposite directions with long periods of dwell in between. In other words, the device is continuously driven in the forward or turning directions.

A turbine driven swimming pool cleaner is also disclosed in the United States Patent No. 4,939,806 issued to Carl F. Supra on July 10, 1990. In this Supra device, a cleaner having a head is mounted on wheels. There is a suction passage and a propeller which is driven by the turbine and which propels the head. A rudder, which is oscillated via a gear train driven by the turbine, is used to vary the direction of movement of the head.

A turbine and wheel styled device is disclosed in the United States Patent No. 5,099,535 issued on March 31, 1992 to Daniel J.V.D. Chauvier, Cleaner for Submerged Surfaces. In this Chauvier device, a cleaner for a submerged surface comprises a body that defines a suction passage and pressure passage. The suction passage extends between an inlet and outlet in the body and is connectable to the inlet of a filtration system by flexible hose. A second hose connects the inlet on the device to an outlet of the system. Water flowing under pressure to the inlet drives a turbine which in

turn drives hind wheels to displace the apparatus over the surface while debris or the like is sucked up through the suction passage and out through the hose that is attached to the filtration system. The suction and return hoses are those of the flexible kind typically used in swimming pool cleaning systems.

In the United States Patent No. 4,208,752 issued to Helmut J. Hofmann on June 24, 1980, an apparatus for cleaning swimming pools in a stepwise movement over the pool walls comprises a balanced operating head having an inlet and an outlet, the outlet adapted to be swivelably connected to a longitudinally resilient and flexible suction hose. The inlet axis is inclined at an angle to that of the outlet. A passage extends through the head from inlet to outlet, and an oscillator valve in the head is adapted to alternately open and close said passage. A baffle plate is disposed in the head between the inlet and valve to form a restricted suction connection between inlet and outlet around the valve when the passage is closed. The flow of water causes the valve to oscillate between its two terminal positions. In one position, the flow is full and direct through the opening and passage to the outlet. In the other position of the valve, there is a maximum reduction in liquid flow through the head. This results in an intermittent cut off flow through the head as the valve oscillates between its terminal positions, and

this in turn causes pulsation which result in longitudinal contractions and relaxations in the longitudinally resilient suction pipe from the head to the outlet from the swimming pool to its filter unit. In consequence of these contractions and relaxations and a simultaneous reduction and increase of the force applied to hold the cleaning head disc against the surface to be cleaned, a step by step movement of the head takes place over the surface to be cleaned.

The United States Patent No. 4,807,318 issued to Dieter H.F. Kallenbach on February 28, 1989, Suction Operated Cleaner, an automatic pool cleaner is disclosed which also operates on the interruption of an induced flow of water through the cleaner. The interruption in the flow of water drawn through the pool cleaner is used to provide a propulsive force to cause the cleaner to move over submerged pool surfaces. The control of the interruption is effected through a tubular axially resilient diaphragm one end of which is closed and adapted to hold normally closed a passage from the head of the pool cleaner to the usual form of flexible hose connecting the pool cleaner to the filtration unit. The flow of water through the pool cleaner causes a suction in a passageway greater than that in a connection, the result being that a spring and diaphragm force the closure of the passageway. The intermittent interruption of flow through the passageway and hose, and the simultaneous release of the force

holding the cleaner and disc against the submerged surface causes the cleaner to move in a stepwise manner over the surface to be cleaned.

In addition to the mechanism used to move the cleaning device along the submerged surface to be cleaned, various appendages have been added to these devices to provide some control over the cleaning pattern and for control of the cleaner when encountering obstacles such as abrupt surface changes and exiting the submersible fluid in which they were designed to operate. The art of submersible pool cleaners has been open to these various methods of automatically propelling the cleaner over the surfaces to be cleaned because any one brings inherent problems with its design.

In cleaning devices using shut off valves, the valve intake tends to clog with larger debris and in order to correct this condition, the cleaning device must be removed from the pool and disassembled for cleaning. The membranes used in these units have a tendency to break and require replacement. The dramatic reduction of flow needed to create the step by step movement of the cleaning device results in severe changes in the pressure head at the suction pump thus placing additional wear on this pump and motor. Cleaning devices using turbine styled systems must depend on the high speed movement of the turbine, large number of bearings and the needed multitude of parts to convert the high speed to the

relatively slow cleaning movement. In addition, the many bearing surfaces perform poorly after performance in the sand which grinds down the bearing parts. The cleaning devices relying on wheels for their traction encounter problems when climbing the vertical walls of typical swimming pools. The wheels slip in attempting to maneuver on the vertical wall and will slip under certain conditions when climbing from the deep end to the shallow end of the pool.

Many of the devices used tend to follow an established pattern once placed into operation. This pattern, often a figure eight style, tends therefore to avoid certain areas over others that see the cleaner more often than necessary. Finally, the onset of new plastics and fiberglass surfaces for swimming pools has created the added demand on these devices to be able to maneuver over slippery surfaces not before encountered. The goal in the art is to find that device which will cover the desired submerged surfaces, be able to execute vertical walls, escape obstacles, avoid climbing out of the submersible fluid where the sucking in of air will cause damage and interrupt operation, place a minimum of excess demand on the system suction pump and motor, and have as few failing parts as possible.

SUMMARY OF INVENTION

The present invention contemplates a self-propelled suction cleaner used in conjunction with a pool suction pump and motor for removing dirt and debris from the submerged surfaces of the pool. It is also contemplated that the system and method are useful in other environments. The cleaner is connected at a coupling located on top of a housing. The coupling is connected to the suction pump and motor using a flexible elongated hose. The cleaner housing incorporates a suction chamber located within the housing. The suction chamber comprises an entrance end in proximity to the submerged surface to be cleaned and an exit end communicating with the coupling.

An oscillator is pivotably mounted within the suction chamber. As the water flows past the oscillator, a to and fro motion results. The shape and size of the chamber between the oscillator and the coupling cause abrupt changes in water flow and a continuous vibratory movement of the housing. The housing has peripheral walls. A shoe is formed around the periphery of the housing and adapted to engage the submerged surface to be cleaned. The shoe comprises tread elements which are angled in a forward direction with respect to the surface. The element angles and the vibratory motion of the housing cause the cleaner to advance in a random pattern over the submerged surfaces including a vertical surface of the

pool. In preferred embodiments the elements of the shoe which engage the surface take on elongated tracks parallel to each other and perpendicular to the forward movement or can be a plurality of finger elements with each element angled. In the preferred embodiment, the angles range from a more perpendicular angle in front of the housing shoe than in the back with each track or element changing angle progressively away from perpendicular as the elements go from front to back.

By making the coupling rotatable, the cleaner can be made to turn at established intervals throughout the random path and allow the cleaner to free itself from pool obstructions. Means is provided for converting a reciprocal angular movement or to and fro movement of the oscillator to an angular movement in one direction for purposes of driving a shaft by incorporating a ratchet and pawl assembly. A drive gear essentially affixed to the shaft engages a gear train. The gear train engages the rotatable coupling at defined intervals to generate rotation of the coupling at these defined intervals.

Means for limiting the elevation of the cleaner as it climbs a vertical wall of the pool comprises a limiter member affixed to and extending forward and out from the housing. The member is dimensioned and disposed such that when the upper end of the member breaks the surface of the water, gravitational force diminishes any forward impetus of the

housing and the extended member acting as a moment arm has the effect of turning the cleaner back toward the water. By affixing a hollow limiter member to the housing and having openings in the hollow member communicating with openings in the housing so as to permit the water to fill the hollow member, the relative weight of the cleaner while submerged in the water is reduced making the to and fro motion of the cleaner more effective in propelling the cleaner forward. Yet the increased weight of the limiter member as it rises out of the water due to the water contained within the limiter member turns the cleaner back toward the water.

Debris can clog the suction chamber at the chamber entrance end proximate to the surface being cleaned. To prevent debris from reducing flow to a point that creates excess suction damaging to the pump and motor, the suction chamber comprises a pressure relief valve. The pressure relief valve comprises a by-pass opening in a housing wall communicating with the suction chamber. A by-pass closure is fitted over the by-pass opening and moveable between a closed position in which the water is prevented from flowing through the opening and an open position in which the water flows from the by-pass opening and into the coupling on to the pump. The by-pass closure is held closed using a spring biasing means in the preferred embodiment. The opening in the housing wall is a plurality of slots in the preferred embodiment.

A gap is located between oscillator side walls and the suction chamber walls. This gap should be as small as possible for optimum flow through the chamber and resulting optimum oscillator forces. As the gap size increases, flow through the gap inhibits oscillator vibration. Grit and debris can fill the gap and impair oscillator movement. The preferred embodiment comprises an oscillator having an elongated groove along the edge of the oscillator and a sealing strip extending into the groove and extensible across the gap.

The present art includes a variety of suction cleaners. A sample of the more typical suction cleaners using vibrator valves, turbine assemblies, and wheels were described in the background section of this specification. There are inherent problems in each of these suction cleaners. Debris clogs cleaners using vibrator valves and membranes to a point where the membrane breaks and needs replacement or as a minimum the cleaner requires disassembly before clearing and reassembly. Turbine mechanisms have a high speed movement. The high speed movement demands bearing surfaces and complex speed reducing parts. The sand and grit found in a typical swimming pool quickly wears the bearing surfaces and the sand generally grinds down these parts. Wheeled cleaners have problems climbing walls. The wheels slip when encountering the vertical walls and the steep inclines running from the deep

end of typical pools to the shallow end. The present cleaning devices tend to slip on the contemporary surfaces made from fiberglass and vinyl. Most of the cleaning devices require smooth transition areas and can get hung up on a step as an example. Many cleaners form a pattern within the pool which is not efficient for cleaning all surfaces. The shut off valve styled cleaners use a stepping motion to propel the cleaner forward that intermittently and dramatically cuts the flow and induces high suction and pressure causing excess strain for the pump and motor.

It is the object of the disclosed invention to avoid the problems inherent in the designs described and provide a self-propelled suction cleaner using continuous suction flow through the cleaner and this continuous flow to provide the vibrating motion needed to advance the cleaner forward. The invention provides means for limiting the elevation of the cleaner above the water line of the pool and thus prevent the pump from sucking unwanted air. The random pattern of the cleaner as it advances over the pool surface is enhanced by a turning means that prevents the cleaner from becoming hung up at obstacles such as pool steps and abrupt surface changes. Should debris clog the cleaner suction chamber, a pressure relief valve will be activated and will eliminate excess strain on the pump and motor.

During operation of the preferred embodiment, nominal pressures ranging between 10 kPa were measured at a position proximate to the weir in a pool cleaning system. Open hose pressures were measured at approximately 8 kPa. In contrast, devices relying on flow cut off to initiate movement generate nominal pressures ranging from 22 kPa to 30 kPa when measured at the same weir position. (1 kPa equals 1000 Pascal units, a metric measure of pressure. One pound per square inch is equivalent to 6.89 kPa units.)

BRIEF DESCRIPTION OF DRAWINGS

A preferred embodiment of the invention including alternate elements is described by way of example with reference to the accompanying drawings in which:

FIG. 1 is a side view of the preferred embodiment for the self-propelled submersible cleaner;

FIG. 2 is a bottom view of the cleaner housing shown with shoe removed;

FIG. 3 is a partial cross-sectional side view of the suction chamber illustrating the arrangement of the oscillator and buffer formations;

FIG. 4 is a bottom view of a shoe having elongated track elements, the skirt elements are displayed;

FIG. 5 is a perspective view of an oscillator used in the preferred embodiment;

FIG. 5a (side view) and FIG. 5b (bottom view) show alternate embodiments for the oscillator and seal arrangement;

FIG. 6 is a partial cut-away view of a section of the oscillator showing the seal arrangement;

FIG. 7 shows an alternate embodiment of a split oscillator in perspective view;

FIG. 8 is a bottom view of another embodiment using moveable suction chamber side walls;

FIG. 9 is a perspective view of the cleaner from the rear showing the rear skirt and pressure relief valve apertures;

FIG. 10 is a bottom view of a shoe tread incorporating finger elements, skirt elements are shown;

FIG. 11 is a partial cut-away view of the cleaner housing showing one embodiment of a pressure relief valve using leaf springs;

FIG. 12 is a coil spring version of the pressure relief valve in a partial cross-sectional view;

FIG. 13 is a partial cross-sectional view of the pressure relief valve in the preferred embodiment;

FIG. 14 is a perspective view of the drive mechanism showing the sprag, pawl and ratchet assemblies;

FIG. 15 is a partial cross-sectional view of the drive mechanism, sprags shown in a latched state;

FIG. 16 is a second partial cross-sectional view of the drive mechanism showing the sprags in a freed state;

FIG. 17 is a partial cross sectional view of the drive mechanism communicating with the oscillator;

FIG. 18 is a partial cross-sectional view of the gear train and rotatable coupling engagement;

FIG. 19 is a partial top view showing the interval drive teeth of the interval drive gear engaging the translational intermediate gear, the translational intermediate gear engages the coupling gear;

FIG. 20 is a partial front view of the interval drive gear engaging a reducing intermediate gear;

FIG. 21 is a partial view showing driven gear engaging the reduction gears in relation to the oscillator;

FIG. 22 is a partial top view showing the rotatable coupling, coupling gear being engaged by the interval drive gear through the translational intermediate gear;

FIG. 23 is a perspective exploded view of the friction gear assembly;

FIG. 24 is a partial perspective view of the ratchet and pawl mechanism used to engage the drum; and

FIG. 25 is a partial cross-sectional view of the friction drive mechanism communicating with the oscillator.

DETAILED DESCRIPTION OF PREFERRED EMBODIMENT

The preferred embodiment of the invention, a self-propelled submersible suction cleaner **10** particularly

describes a swimming pool cleaner 10 which makes use of the flow of water through a cleaner housing 12. This embodiment is generally described in FIG 1 through FIG 4 of the enclosed drawings. The housing 12 contains a suction chamber 14 having a mouth 16 located at an entrance end 18 in which water flows. The chamber exit end 24 communicates with a coupling 26 located on top of the housing 12. In the preferred embodiment, the coupling is rotatable. The propulsion mechanism for the cleaner 10 includes an oscillator 20 pivotally mounted to side walls 22 of the chamber 14. The oscillator 20 is disposed within the flow path of the water through the suction chamber 14. The flow is caused by connecting the suction chamber 14 to a filter pump and motor by a suitable flexible hose as is typically done in the pool cleaning art. The hose is connected at the coupling 26. The oscillator 20 is so shaped that flow therepast causes it to move to and fro about its pivot point and impact the forward 28 and aft 30 walls of the chamber 14 to create a vibratory movement of the chamber 14 and housing 12 to which the chamber 14 is an integral part. This vibratory movement acting on the housing 12 causes a shoe 32 attached at the periphery 34 of the housing 12 and in contact with the pool submerged surface 36 to vibrate. The shoe 32 has tread elements 38 contacting the submerged surface 36 at an angle 40. This angle 40 is such to drive the housing 12 in a forward direction and thus

propel the cleaner **10** over the submerged surface **36** of the pool.

The cleaner **10** being propelled in this forward direction **42** (illustrated in FIG. 1) would typically take a somewhat random path determined by the pool surface contours peculiar to any given swimming pool. To improve on the randomness of the path and avoid developing a path pattern, the preferred embodiment of this invention incorporates a turning mechanism **200** using a rotatable coupling **26** and means for converting the vibratory motion to a rotating motion for turning the cleaner **10** at intervals through at least a 90° turn. Such a turn during the random path will insure that the path does not establish a pattern, typically a figure eight in many swimming pools. In addition, should the cleaner **10** encounter an obstacle such as a step, typically found in swimming pools, the 90° or greater turn will permit the cleaner to maneuver away from the step.

The cleaner **10** will climb the submerged vertical wall of the swimming pool and reach the surface of the water. Noting FIG. 1 and FIG. 9, the preferred embodiment includes an elevation limiter **100** which turns the cleaner back toward the water as it attempts to climb out. This limiter **100** allows the suction chamber **14** to always see a flow of water and avoids the detrimental sucking of air by the pump.

The suction chamber **14** is configured to accept the sand and even larger debris such as leaves typically found in swimming pools and not clog. However, should the suction chamber clog up and severely increase pressure in the chamber **14** and to the pump, a pressure relief valve **300** is a part of the preferred embodiment. The following further describes the invention with additional detailed descriptions of the elements making up the preferred embodiment of the cleaner **10** and alternative embodiments for some of these elements.

The Oscillator **20** and suction chamber **14** can be further described as follows:

In order for the oscillator **20** to operate efficiently it must be located in a suction chamber **14** so that the oscillator **20** pivots in close proximity to side walls **22** of the chamber **14**. This is necessary so that the bulk of flow past the oscillator **20** moves along surfaces designed to provide the to and fro movement of the oscillator.

The suction chamber located within the housing **12** is comprised of side walls **22**, forward wall **28** and aft wall **30**, the forward and aft walls defined by the housing **12** in the preferred embodiment as illustrated in FIG. 2 and FIG. 3.

The oscillator **20** (shown in FIG. 3 and FIG. 5) is pivotally mounted within the suction chamber on a hinge pin **92** extending through a boss **44** on the oscillator, the hinge pin being journalled on the side walls 22.

As illustrated in FIG. 3, the liquid flow 90 into the suction chamber 14 via the mouth 16 of the housing impinges on the oscillator 20 flowing around the edges 46 causing the oscillator 20 to swing to and fro on its hinge pin 92 impacting against the chamber forward 28 and aft 30 walls. Buffer formations 70 are placed between the edges 46 of the oscillator 20 and chamber walls. In addition the flow has an abrupt change at the top of the chamber as the flow 90 moves past the oscillator 20 toward the chamber exit and coupling 26.

It will be appreciated that the efficiency of the operation of the oscillator 20 depends on the strength of flow over the oscillator edges 46. If this flow is dissipated around the side edges 48 and 50 of the oscillator between the latter and the chamber side walls 22, the strength of the flow past the oscillator edge 46 will be diminished with a consequent drop in the efficiency of the propelling action of the oscillator.

In order to prevent such dissipation of the flow energy, the arrangement may be one in which the oscillator 20 is neatly located between the chamber side walls 22 so that little flow is dissipated. In this event, however, grit drawn into the suction chamber 14 is liable to lodge between the oscillator 20 and side walls 22 thereby causing loss of

efficiency of the oscillator 20 through friction, or the oscillator 20 may even stick.

In accordance with the present invention the oscillator 20 (shown in FIG. 5) and suction chamber 14 are designed so that the edges 48 and 50 are suitably spaced from the side walls 22 of the suction chamber 14 to enable grit to pass easily therethrough. Retractable elongated seals 54 are provided at each edge of the oscillator 20 to seal the gap 52 between the edges 48 and 50 of the oscillator 20 and the side walls 22 of the suction chamber (shown in FIG. 6).

Elongated seals 54 (FIGS. 5 and 6) are located in slot 56 in the respective edges 48 and 50 of the oscillator 20, the width of the strips being no greater than the depth of the slots 56.

In an alternate embodiment (illustrated in FIGS. 5a and 5b) for the oscillator 20, seals 54a are contoured to the oscillator 20 and have their ends 54b riding in slots 56a located at the oscillator edges 46 (as shown in FIGS. 5a and 5b). Slide bars 54c are affixed to the seals 54a to provide a means for sliding the seals 54a back and forth so as to dislodge grit during a cleaning process for the cleaner 10. Thus when the suction chamber 14 is coupled to a filter pump and water is caused to flow around the oscillator 20 in the suction chamber 14, the seals 54 are drawn outwardly from the slots 56 into sealing engagement with the chamber side walls

22 of the suction chamber 14. Under normal operation of the oscillator 20 the engagement between the elongated seals 54 and the chamber side walls 22 causes minimal friction and little impairment of the efficiency of the oscillator 20. In the event that grit finds its way between a seal 54 and the side walls 22, the seal 54 is simply forced to retract into the slots 56 allowing the grit easily to pass through the suction chamber 14 and into the filter system of the swimming pool.

Referring now to FIG. 7, it will be seen that in an alternative arrangement the oscillator 20 is split into two sections 20a and 20b. The oscillator sections 20a and 20b have a groove 60. A tongue 58 is slidable into and out of the groove 60.

In the event that grit finds its way between the seal sides 48 and 50 and the chamber side walls 22, the oscillator sections 20a and 20b are simply forced to retract along the tongue 58 and into the groove 60 of oscillator sections 20a and 20b thereby opening a gap between elongated seals 54 and side chamber walls 22 of the suction chamber 14 and thus allowing the grit easily to pass through the suction chamber 14 into the pool system filter.

Referring now to FIG. 8, a second alternative is provided in the form of a suction chamber 14 having side walls 62 and 64 mounted so as to allow end sections 62a and 62b and 64a and

64b to be slidable into and out of guide tracks 66a, 66b and 68a, 68b, respectively.

Under normal conditions the side walls 62 and 64 are drawn against the oscillator 20 by the suction created within the suction chamber 14. However, should grit enter between the oscillator 20 and the walls 62 and 64 the latter simply retract into the guide tracks 66a, 66b and 68a, 68b allowing the grit to pass through the suction chamber into the pool filter system.

Because of the strength and frequency of the impact on the forward 28 and aft 30 chamber walls by the oscillator, buffer formations 70 are affixed to the chamber wall 28 and 30 at the impact location between the impacting oscillator edge 46 and chamber wall. In the preferred embodiment these buffer formations 70 are rubber-like pads. These buffer formations thus protect the housing 12 and in general the cleaner 10 from damage resulting from the action of the oscillator.

The hoe 32 assembly 32 can be further described as follows:

As disclosed earlier and in FIG 3 & 4, the shoe 32 comprises a plurality of tread elements 38. The tread elements 38 can be in the form of elongated tracks 72 as shown in the preferred embodiment of FIG 4 having the track elements 72 spaced and generally parallel to each other with the

elongated element perpendicular to the forward direction 42 of the cleaner movement. The elements 72 are angled forward with respect to the submerged surface. In the preferred embodiment shown in FIG 3, the elements 72 form an acute angle 40 with respect to a perpendicular to the shoe. As the elements progress from the front of the housing 74 to the rear 76, the angle 40 increases progressively for each respective element 72. The first few rows of elements 72 at the front 74 are shorter than in the middle or rear in order to better execute the climbing of a steep vertical pool wall.

In addition to this climbing feature in the preferred embodiment, a coupling bellows 78 is fitted to the coupling 26. This bellows 78 provides added flexibility to the end of the flexible hose and permits improved execution of the steep vertical pool wall. FIG 1 discloses this coupling bellows 78 configuration.

In an alternate arrangement, the shoe 32 is configured with tread elements 38 that are made from a plurality of finger elements 80 set in a matrix array as described in FIG 10. The matrix is made from parallel rows of finger elements 80 spaced in a similar manner as the parallel rows of track elements 72. Each row of finger elements 80 is angled and configured as the track elements 72 with a tread element angle 40 and progression of increasing angles when moving from front to back as described earlier.

The outside portion of the shoe 32 making contact with the surface has an outside dimension defined by the housing periphery 34 and an inside dimension to provide sufficient contact with the surface to be cleaned and an opening to allow access to the mouth 16. The tread elements 38, whether finger elements 80 or track elements 72, define a shoe removably affixed to the housing periphery passing partially around the mouth 16 of the suction chamber 14. A flap 82 (illustrated in FIG. 4 and FIG. 9) is pivotally affixed to the housing periphery directly behind the suction chamber aft wall 30. In an alternate embodiment, the flap is made an integral part of the shoe which shoe then passes completely around the mouth 16. The flap 82 is a means for flow adjustment and control by pivoting open and closed during variations in suction. In addition to the flap 82, an internal skirt 84 (refer to FIG. 4 and FIG. 10) and external skirt 86 are positioned near the periphery and prevent the free flow of water through the shoe elements thus causing the suction to increase. The skirts can be made a part of the shoe elements or a part of the housing. In the preferred embodiment, both methods are incorporated. An internal skirt portion 88 is comprised of an extension of the forward chamber wall. The balance of the internal skirt 84 is a part of the shoe as is the external skirt 86. The height of both skirts is slightly shorter than the tread

elements 38 to permit the elements 38 to flex during their vibratory and propelling movement.

The skirts project downwardly as described. In a preferred embodiment the external skirt 86 is configured such that the tread elements 38 are almost fully exposed at the front of the housing 12 but project only slightly beyond skirt at the rear of the housing as illustrated in FIG. 9.

The internal skirt portion 84 can be molded integrally with the housing 12 and be located adjacent the elements and internally thereof and extends from one side of the suction chamber 14 the other along the front thereof. Both the external skirt 84 and internal skirt 88 are also laterally spaced from elements so that the elements are able to flex under the vibratory action of the oscillator 20.

It will be appreciated that the flow of water into the suction chamber 14 is directed around the free edges of the internal 84 and external skirts 86 in order to provide sufficient suction through the suction chamber 14 on a submerged surface engaged by the cleaner 10.

As an additional note, it is a feature of the invention that the leading edge of the oblong shape of the shoe is a straight edge disposed substantially at right angles to the direction of movement of the cleaner 10. Preferably the rear edge will likewise is a straight edge as shown in FIG. 2. It has been found that the straight, front and rear edges of the

shoe **32** and tread elements **38** enhance the mobility and climbing ability of the cleaner.

As discussed, it has been found that the differential angle of the elements (illustrated in FIG. 1) in the leading and trailing edges, enhances the climbing ability of a cleaning device through an upwardly radiased curved surface, the climbing ability of the suction cleaning is further enhanced by the straight leading and trailing edges of the skirt formation.

The elevation limiter **100** can further be described as follows:

The housing **12** includes a limiter member **110** which for the preferred embodiment comprises an inverted U-shaped pipe connected at its ends to the housing **12** towards the sides thereof so that the open ends **112** of the pipe communicate with the housing **12**.

As illustrated in FIG. 1 and FIG. 2, the member **110** extends upwardly and forwardly with respect to the housing **12** and when the latter is immersed in a pool the member **110** fills with water.

With forward motions of the cleaner **10** up the side wall of a pool, the cleaner rises until the upper end of the member **110** breaks the surface of the water whilst the suction chamber **14** of the housing **12** is still located just below the surface. As the member **110** emerges from the surface of the water it

undergoes an apparent gain in weight and the upward and forward extent of the member **110** and its dimensions are designed so that the gain in weight balances the forward impetus of the head when the latter is just beneath the surface. In this way the member **110** operates as an elevation-limiting device preventing the suction chamber **14** from breaking the surface of the water and drawing in air which would impair the operation of the pump.

By adding a flexible portion to the extension member **110** proximate to the housing **12**, the vibratory motion of the housing **12** causes the extended limiter member **110** to flex. This flexing reduces the resistance created by the movement of the member **110** through the water, thereby allowing freer vibration and thus efficient operation of the cleaner **10**. In the preferred embodiment, bellows couplings **114** are affixed to the limiter member **110**. The flexible nature of the bellows **114** provides a sufficiently reduced moment arm and provides the smoother forward movement for the cleaner **10**.

The turning mechanism **200** can further be described as follows:

In order to more clearly illustrate the invention, an embodiment for a drive mechanism is described hereunder with reference to the accompanying drawings of FIGS. 14 through 18.

A drive mechanism **210** illustrated in FIG. 14 through FIG. 17) is used with the submersible cleaner **10** for translating

reciprocating angular movement 212 of a drive shaft 214 into one directional angular movement 216 of a driven gear 218. The driven gear 218 can perform a number of functions for the pool cleaner and it is in particular envisaged that it will drive a gear train 220 mechanism for a pool cleaner through a number of reduction gears 222, such as that shown in FIG. 18 and used to turn a rotatable coupling gear 254 and thus the coupling 26.

The drive mechanism comprises a peripheral ring 226 of teeth 228 secured or integrally formed within a drum 230 defined at the end of the driven gear 218. The teeth are periodically engaged by a plurality of pawl or sprag elements 232 which are pivotally mounted in pockets 234 defined in a collar formation 236 at the end of the drive shaft 214. The collar 236 of the drive shaft 214 and the sprag elements 232 are thus disposed within the drum 230 of the driven gear 218 to enable the sprag elements 232 periodically to engage the internal teeth 228.

The pockets 234 which pivotally mount the sprag elements 232 define opposed abutment surfaces 234a, 234b, which act to limit pivotal movement of the sprag elements 232 between a first extreme position (shown in FIG. 15) wherein the sprag elements 232 are substantially radially disposed to engage the teeth 228; and a second extreme position (shown in FIG. 16)

wherein the sprag elements 232 are angled relative to the radial and out of engagement with the teeth 228.

It is a feature of the invention that the sprag elements 232 operate in a liquid medium, such as water, preferably the same liquid in which the surface to be cleaned is immersed, and this medium tends to impart a high degree of inertia to the sprag elements 232. The free ends 232a of the sprag elements 232 thus tend to remain stationary during angular movement of the drive shaft 214 in one direction or the other. Thus, with the sprag elements 232 in the first extreme position and radially orientated (FIG. 15), rotational movement of the drive shaft 214, for example, in an anti-clockwise direction causes the sprag elements 232 to move to the second extreme position (FIG. 16) and remain in such position during further anti-clockwise rotation of the drive shaft 214. Likewise, when the shaft 214 reverses its direction of rotation to a clockwise direction, the sprag elements 232 will immediately straighten out to the first extreme position wherein they are radially oriented and engage the teeth 228 of the driven gear 218.

In order to permit rotational movement of the driven gear 218 to one directional movement, the invention further provides a pawl 240 and ratchet 242 arrangement comprising peripheral ratchet teeth 242 defined on the outer periphery

of the drum 230 which are engaged by means of the pawl 240 which is mounted independently of the drum 230.

The driven gear 218 will rotate during the movement of the cleaner 10 through the described translation of reciprocating angular movement 212 into one direction angular movement or rotation. This rotating driven gear 218 can be coupled with a variety of drive mechanisms including a mechanism to lift the suction chamber to break suction, and drop the cleaner off a vertical wall as an alternative embodiment for the elevation limiter 200 discussed earlier.

In the preferred embodiment, the driven gear 218 is used in conjunction with a gear train 220 (described in FIGS. 18 through 22) that engages a coupling gear 254 engaged with the coupling 26. The driven gear 218 engages a first gear 244 and a series of reduction gears 222 to engage an interval drive gear 248. The interval drive gear 248 contains a set of interval teeth 250 that engage the coupling gear 254 through a translational intermediate gear 252. Sufficient teeth 250 are placed on the interval drive gear 248 to allow the coupling 26 to rotate through at least a 90° turn.

In an alternate embodiment of the drive mechanism (FIG. 23 through FIG. 25), a friction drive is adapted to translate oscillating angular movement of a drive shaft 214 into periodic one directional angular movement of a driven gear

218. The driven gear 218 can then drive further gears as earlier described to cause the rotation of the cleaner 10.

The friction drive illustrated in FIG. 23 through 25 comprises a first friction surface 260 defined by a disc element 262, to which the drive shaft 214 is secured or with which it is integrally formed. The friction disc 262 is urged into contact with a second friction surface 264 defined by a second disc 266, by means of a compression spring 268 and the second friction disc 266 is in turn associated with a driven gear 218. The second friction disc 266 is secured to a drum formation 236 to which the driven gear 218 is secured or with which it is integrally formed so that rotational movement of the friction disc 266 causes rotational movement of the gear 218.

In an alternative arrangement (not shown), the driven gear 218 is secured to a friction disc such as that shown at 262 which is urged into frictional engagement with a friction surface defined by the interior blind face 268 of the drum formation 236, with the drive shaft 214 secured directly to the drum 236 or to the friction disc 262.

In the embodiment illustrated, the friction disc 262 is induced into frictional engagement with the friction surfaces 264 by means of a compression spring 268 which terminates in washers 270 and 272.

In order to limit movement of the driven gear **218** to one directional movement as shown by the arrow **216**; a pawl **240** and ratchet **242** arrangement is also provided, with teeth of the ratchet **242** being defined on the outer surface of the drum **236**. With reference to FIG. 24, a pawl **240** in the form of a resilient leaf spring **240** is provided to engage the teeth **242** to prevent reverse rotation of the drum **236** and thus the driven shaft **218**.

The pressure relief valve **300** is further described as follows:

The housing **12** incorporated a suction chamber **14** comprised of side walls **22** and end walls **28** and **30** defined by the housing itself.

The coupling **26** is provided on the housing **12** for a suction hose (not shown) used to connect the suction head to the filter pump of a swimming pool. Coupling the housing **12** and chamber **14** to the filter pump causes flow into the suction chamber **14** via the mouth **16** and the flow impinges first on one edge **46** and then on the other edge **46** of the oscillator **20** causing the latter to swing to and fro.

It will be appreciated that if large objects such as leaves, twigs and the like, collect in restricted areas of the flowpath past the oscillator **20**, the flow path could become starved and if no relief or by-pass valve is provided, the motor driving the pump will be damaged.

In accordance with the present invention the housing **12** includes by-pass apertures **310** in the suction chamber **14** at the upper end thereof close to coupling **26** for the suction hoses. These by-pass apertures **310** are closed off by a by-pass closure **312** pivotally mounted within suction chamber **14** on hinge pin **314**. Leaf springs **316** are secured at their ends **316a** on to the housing **12** within the suction chamber **14** and at their opposite ends **316b** to the by-pass closure **312**. Thus the leaf springs **316** bias the closure **312** to a position closing the by-pass apertures **310**. FIG. 11 describes this embodiment.

With normal operation of the suction cleaner device the restricted passages in the location of the oscillator **20** are unblocked and the springs **316** exert sufficient force to maintain the closure **312** in a closed position. However, should the entrance to the suction chamber become blocked with leaves or other debris, the pressure in the suction chamber **14** will drop abnormally through the action of the filter pump causing the closure **312** to be forced away from the by-pass apertures **310** against the biasing action of springs **316**. Water will thus flow into the suction chamber **14** and the suction hose via the by-pass apertures **310** until the blockage of the suction chamber is removed. In this way by-pass apertures **310** act as a pressure relief valve **300** ensuring that the pump is not starved and that its motor is not endangered.

It will be appreciated that the positioning of the by-pass apertures **310** downstream from the oscillator but away from the pool system weir render it unlikely that the apertures **310** will become blocked. Furthermore it eliminates air suction at the weir when the water level is low.

In addition, the strength of springs **316** is balanced to ensure that water is drawn in via the by-pass valve in a controlled way providing an additional means for regulating the speed of the oscillator and thus the suction at the suction chamber mouth **16**.

In a similar manner (illustrated in FIG. 12), coil springs **320** can be used to hold the by-pass closure **312** against the by-pass apertures **310**. In a third and preferred embodiment, the by-pass apertures **310** are closed using a flexible plate **322** biased against the apertures **310** by affixing one end of the plate **322a** to the chamber wall adjacent the apertures as described in FIG. 13.

This concludes the description of the preferred embodiments. A reading by those skilled in the art will bring to mind various changes without departing from the spirit and scope of the invention. It is intended, however, that the invention only be limited by the following appended claims.

THE EMBODIMENTS OF THE INVENTION IN WHICH AN EXCLUSIVE PROPERTY OR PRIVILEGE IS CLAIMED ARE DEFINED AS FOLLOWS:

1. A self-propelled submersible suction cleaner, comprising:

a housing, having a coupling adapted to be connected with a flexible hose coupled to a cleaning system pump and motor;

a suction chamber located within the housing, the chamber having an entrance proximate to a submerged surface and an exit communicating with the coupling;

an oscillator pivotably mounted within the suction chamber for providing a continuous vibratory movement to and fro as fluid passes across the oscillator with a gap between an edge of the oscillator and a wall of the chamber;

a sealing means slidably mounted on the edge of the oscillator for extending across the gap, but retractable away from the chamber wall under the action of grit lodging between the sealing means and the chamber wall to thereby open the gap and allow the grit therethrough; and

a shoe formed substantially around a periphery of the housing and extending generally laterally across the housing toward the entrance and adapted to engage the submerged surface, the shoe further comprising tread elements angled in a forward direction with respect to the surface over which the cleaner is advancing.

2. A self-propelled submersible suction cleaner as recited in claim 1 wherein the sealing means comprises:

the oscillator having an elongated groove along the edge of the oscillator; and

a sealing strip extending into the groove and extensible across the gap.

3. A self-propelled submersible suction cleaner as recited in claim 1 wherein the oscillator is formed of at least two parts, the parts communicating by a tongue and a groove, the tongue and groove aligned with each other for mating during operation of the oscillator.

4. A self-propelled submersible suction cleaner as recited in claim 1 wherein the shoe further comprises:

a plurality of elongated track elements, each track angled forward with respect to the surface, each elongated track substantially parallel to another elongated track, a curtain extending at least partially surrounding the entrance to the suction chamber; and

a flap removably affixed to the periphery of the housing, the flap communicating with a trailing edge of the suction chamber entrance proximate to the surface, the flap and elements together substantially surrounding the suction chamber entrance.

5. A self propelled submersible suction cleaner as recited in claim 4 wherein the tracks are a plurality of finger elements substantially surrounding the suction chamber entrance end and angled in the forward direction.

6. A self-propelled submersible suction cleaner as recited in claim 4 wherein the plurality of track elements are

located to sides of the suction chamber entrance and a second flap is removably affixed to the a leading edge of the suction chamber entrance.

7. A self-propelled submersible suction cleaner as recited in claim 1 further comprising opposing buffer formations located within walls of the chamber, against which the oscillator strikes alternatively during oscillatory movement, the buffers transferring oscillator impact forces to the cleaner housing.

8. A self-propelled submersible suction cleaner as recited in claim 1 wherein the housing further comprises an external skirt defined by front, rear and opposing side walls of the housing, all of the housing walls defining the external skirt, the external skirt extending at least partially around the suction chamber, the external skirt dimensioned across the front wall so as to essentially expose the tread elements along the front and an internal skirt extending around at least a portion of the suction chamber.

9. A self-propelled submersible suction cleaner, comprising:

a housing having peripheral walls;

a suction chamber located within the housing, the chamber having an entrance end proximate to a submerged surface and an exit end communicating with a rotatable coupling, the coupling connecting with a flexible hose, the flexible hose attached to a cleaning system pump and motor;

an oscillator pivotably mounted within the suction chamber for a continuous vibratory movement to and fro with a gap between an edge of the oscillator and a wall of the chamber;

a shoe formed partially around a periphery of the housing and adapted to engage a submerged surface, the shoe further comprising tread elements angled in a forward direction with respect to the surface over which the cleaner is advancing;

means for turning the cleaner about an axis of a coupling;

means for limiting the elevation of the cleaner suction chamber within a liquid of the submerged surface; and

means for limiting suction in the chamber, the means being a pressure relief to the system pump and motor creating the suction.

10. A self-propelled submersible suction cleaner as recited in claim 9 wherein the turning means comprises:

a drive shaft operable in a reciprocal manner;

a collar fitted to the drive shaft, the collar having sprag elements extending radially therefrom;

a ring encircling the collar, the ring having inside teeth engageable by the sprag elements, the sprag elements dimensioned and selected to act in a dense medium which serves to hold the sprag elements stationary relative to a drive shaft rotatably coupled with the ring of teeth, upon angular movement thereof causing the sprag elements to move a first extreme position upon rotation of the shaft in one direction and to a second extreme position upon rotation of the shaft in the reverse direction, thereby engaging the teeth of the ring during such movement;

means for limiting rotation of the ring in one direction;

a drive gear affixed to the ring;

a gear train having a first gear rotatably engaged with the drive gear and a reduction gear rotatably engaged with a coupling gear, the coupling gear affixed to the rotatable coupling; and

an intermediate gear having coupling gear engaging teeth spaced at defined intervals so as to generate rotation of the coupling at the defined intervals.

11. A self-propelled submersible suction cleaner as recited in claim 9 wherein the elevation limiter means comprises a limiter member extending forward and out from the cleaner housing, the limiter member being dimensioned and disposed such that when an upper end of the member breaks the surface of the liquid as the suction head climbs a submerged substantially vertical surface, gravitational force diminishes any forward impetus of the suction cleaner and the extended member has the effect of turning the cleaner back toward the liquid.

12. A self-propelled submersible suction cleaner as recited in claim 11 wherein the elevation limiter member comprises a substantially hollow member connected at an end to the housing, the housing having openings communicating with the hollow member end so as to permit the liquid filling the housing to also fill the hollow limiter member.

13. A self-propelled submersible suction cleaner as

recited in claim 9 wherein the elevation limiter means comprises a means for dislodging the cleaner shoe as it climbs a submerged vertical surface by breaking suction of the suction chamber and permitting the cleaner to drop off of the vertical wall.

14. A self-propelled submersible suction cleaner as recited in claim 9 wherein the chamber suction limiting means comprises:

a by-pass opening in one of the housing walls communicating with the suction chamber;

a by-pass closure fitted over the by-pass opening and moveable between a closed position in which the liquid is prevented from flowing through the by-pass opening and an open position in which the liquid flows from the bypass opening and into the coupling; and

means for biasing the closure into the closed position, the biasing means selected to be overcome by predetermined high suction pressure through the coupler.

15. A self-propelled submersible suction cleaner as recited in claim 14 wherein the biasing means is a spring and the opening is a plurality of holes in the periphery wall.

16. A self-propelled submersible suction cleaner as recited in claim 9 wherein the housing further comprises an external skirt defined by front, rear and opposing side walls of the housing, all of the housing walls defining the external skirt, the external skirt extending at least partially around

the suction chamber, the external skirt dimensioned across the front wall so as to essentially expose the tread elements along the front and an internal skirt extending around at least a portion of the suction chamber.

17. A self-propelled submersible suction cleaner as recited in claim 12 wherein the hollow member further comprises a flexible portion between the hollow member and the housing.

18. A self-propelled submersible suction cleaner as recited in claim 9 wherein a buffer formation is interposed between the oscillator and the suction chamber at a location where an edge of the oscillator makes contact with the suction chamber.

19. A self-propelled submersible suction cleaner as recited in claim 9 wherein the coupling contains a flexible member.

20. A method of cleaning a surface submerged in a liquid, the method comprising the steps of:

providing a cleaner having a suction chamber, the chamber having chamber walls located within a housing, the chamber having an entrance end in proximity to the surface and an exit end communicating with a rotatable coupling;

connecting the rotatable coupling to a flexible hose, the flexible hose attaching to a suction pump and motor system;

moving an oscillator pivotably attached at an axis to the chamber walls to and fro about the axis so as to permit the

liquid to be sucked into the chamber about one side and then another side of the oscillator;

forming the chamber walls so as to create abrupt changes in liquid flow into the chamber, the abrupt changes causing a vibratory movement of the housing;

attaching a shoe formed at least partially around a periphery of the housing and adapted to engage the submerged surface, the shoe containing tread elements angled in a forward direction with respect to the surface;

attaching a flap removably affixed to the periphery of the housing, the flap communicating with a trailing edge of the suction chamber entrance end, the flap and tread elements substantially surrounding the suction chamber entrance end;

converting the to and fro movement of the oscillator to a rotational movement;

turning the cleaner about an axis of the rotatable coupling at selected intervals by using a gear train connecting the rotatable coupling to a driven shaft rotatably attached to the oscillator;

limiting the cleaner elevation during a climb up a submerged vertical wall by attaching an extension member to the housing, the extension member causing the cleaner to turn back toward the liquid as the cleaner climbs above a liquid surface; and

limiting the suction in the suction chamber by providing a by-pass flow path around the suction chamber entrance end.

21. A method of cleaning a surface submerged in a liquid recited in claim 20 wherein the step of converting the to and

fro movement of the oscillator to a rotational movement further comprises:

operating a drive shaft in a reciprocal manner;

fitting a collar to the drive shaft, the collar having sprag elements extending radially therefrom;

encircling a ring around the collar and the sprags, the ring having inside teeth engageable by the sprags, the ring having a ratcheting outside surface;

coupling a driven shaft rotatably with the ring;

providing a pawl, the pawl affixed to the housing;

limiting the rotation of the ring in one direction using the ring ratchet surface and the pawl;

affixing a drive gear to the ring;

driving a gear train engaging the drive gear and a coupling gear affixed to the rotatable coupling; and

an intermediate gear within the gear train engaging at predetermined intervals.

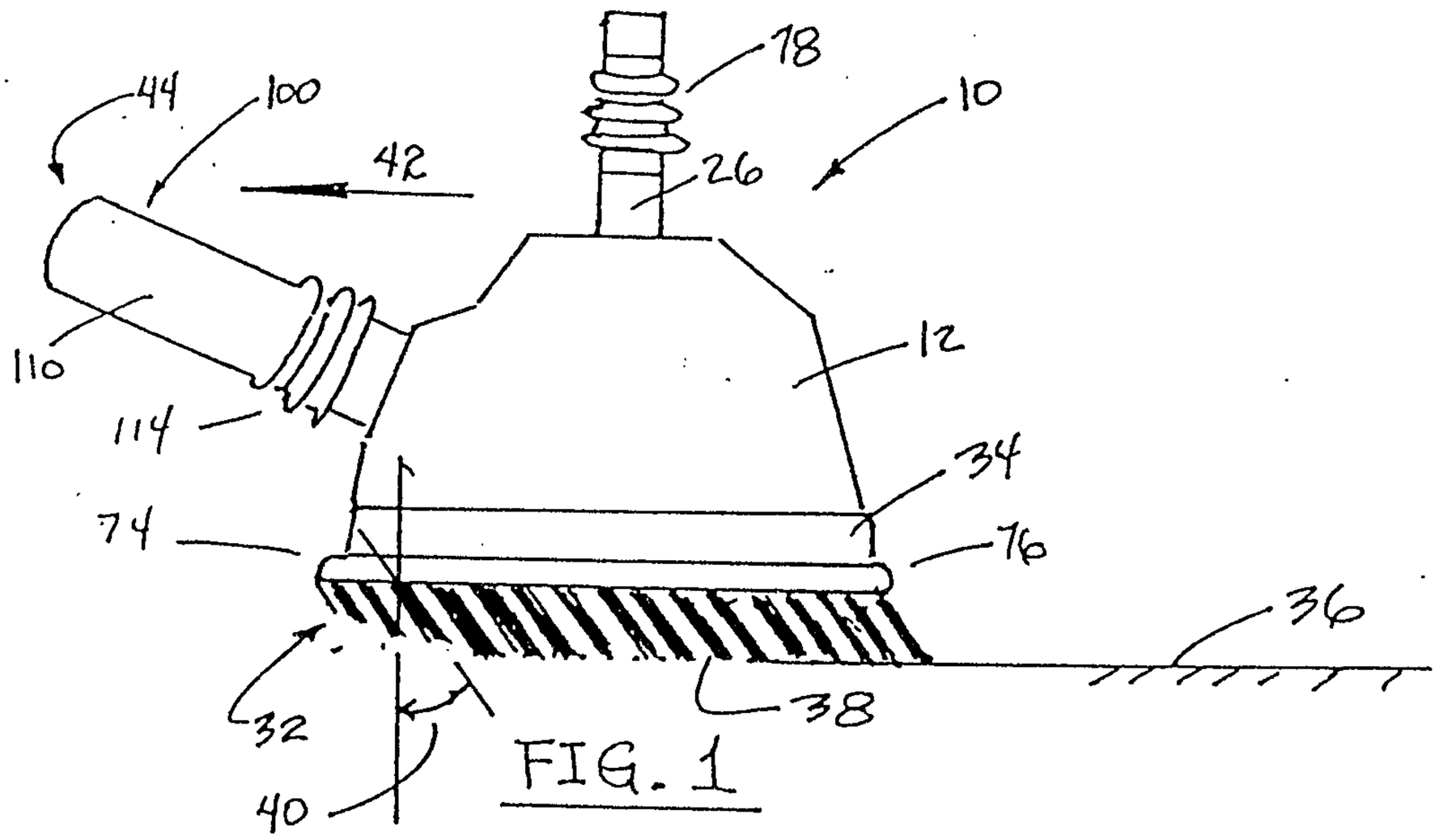

FIG. 1

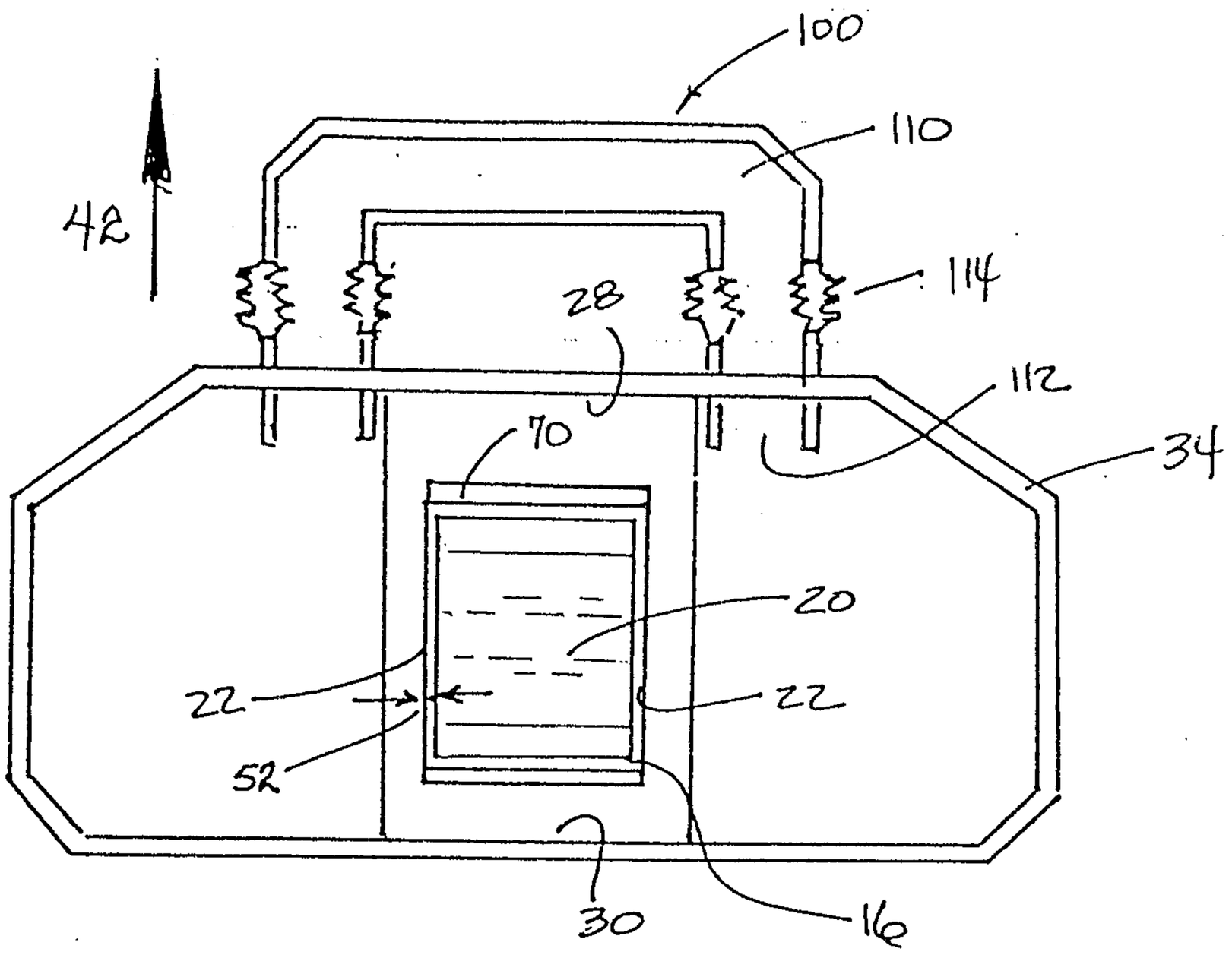

FIG. 2

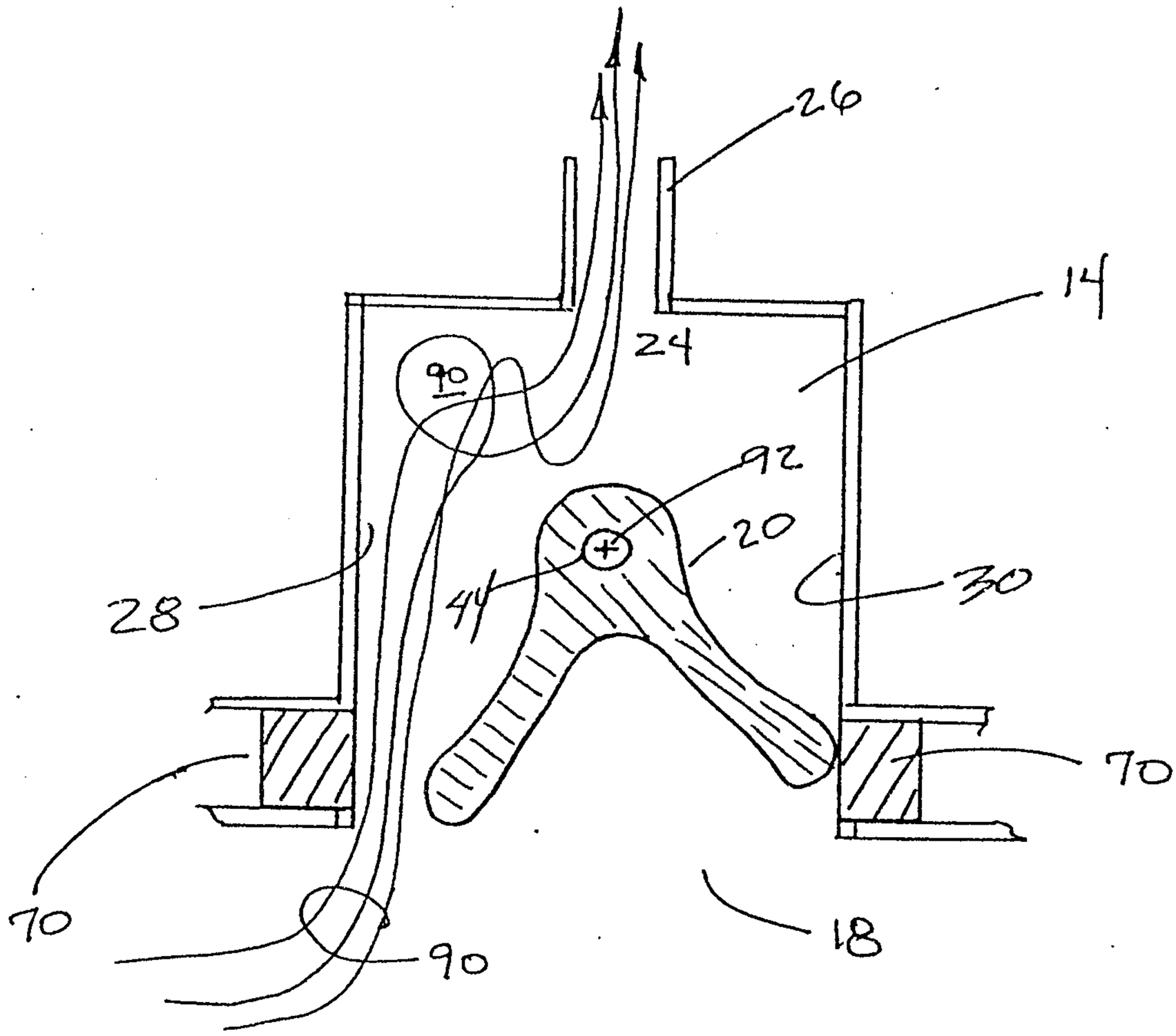

FIG. 3

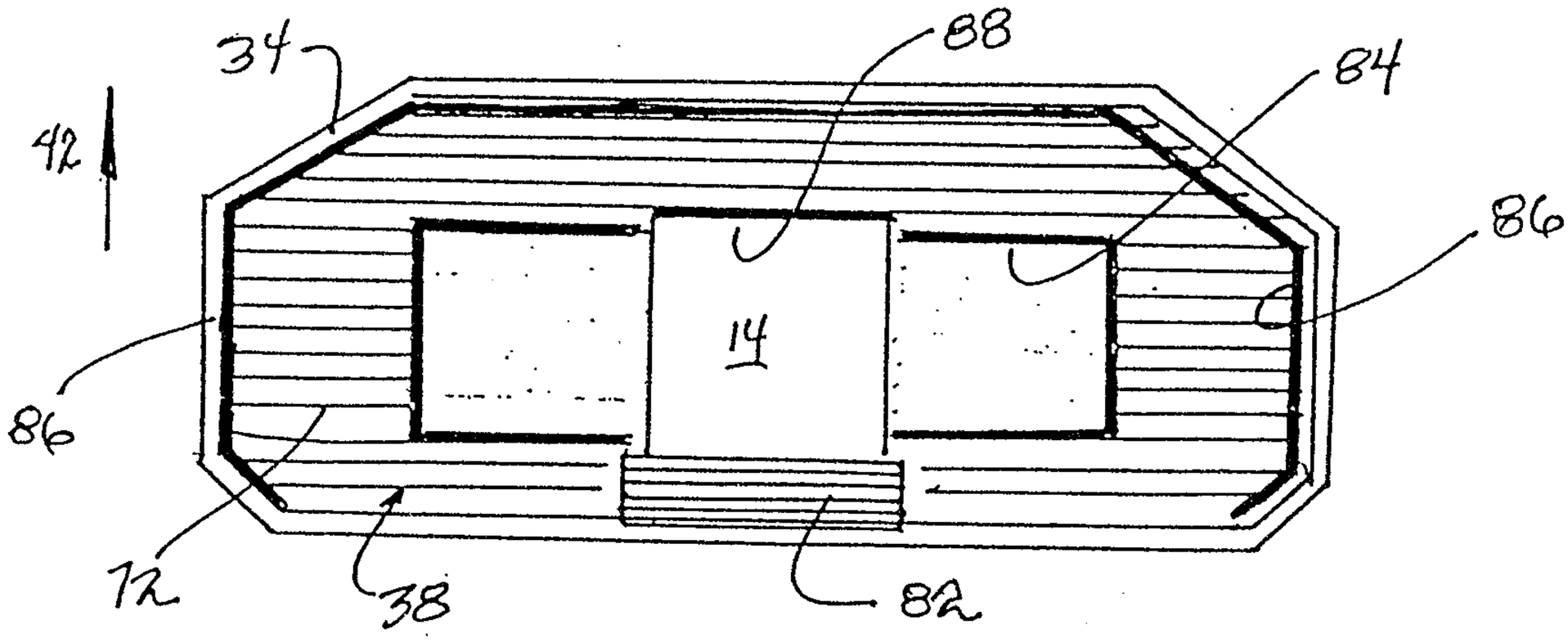

FIG. 4

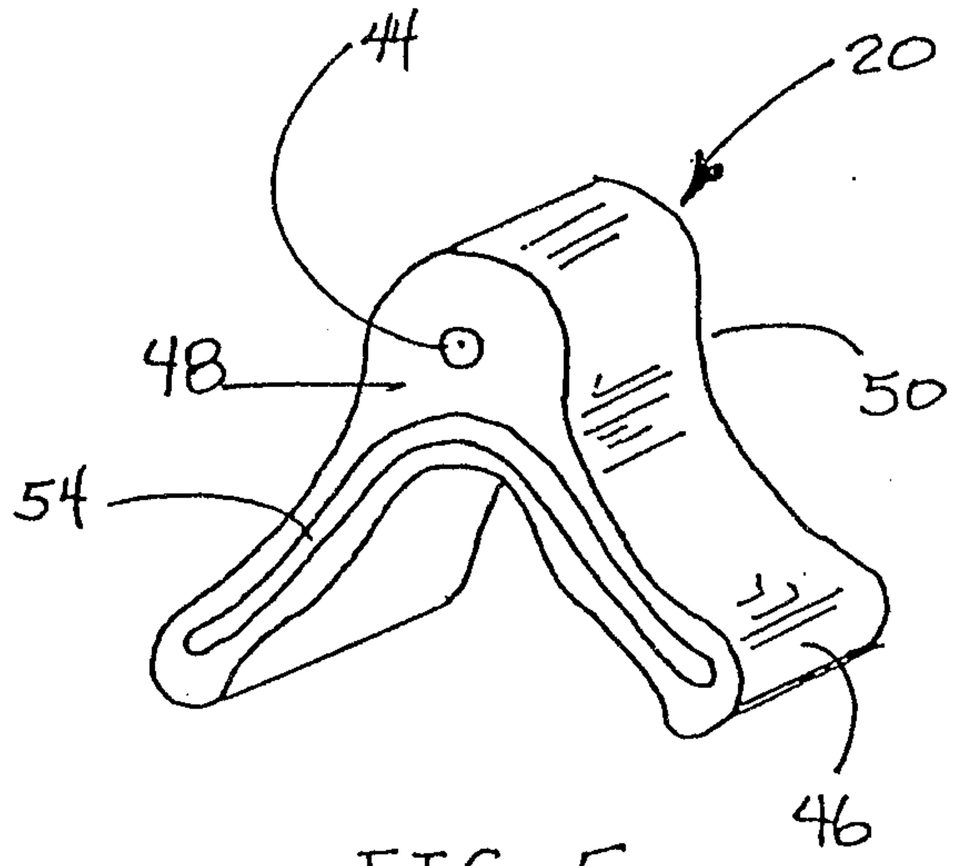

FIG. 5

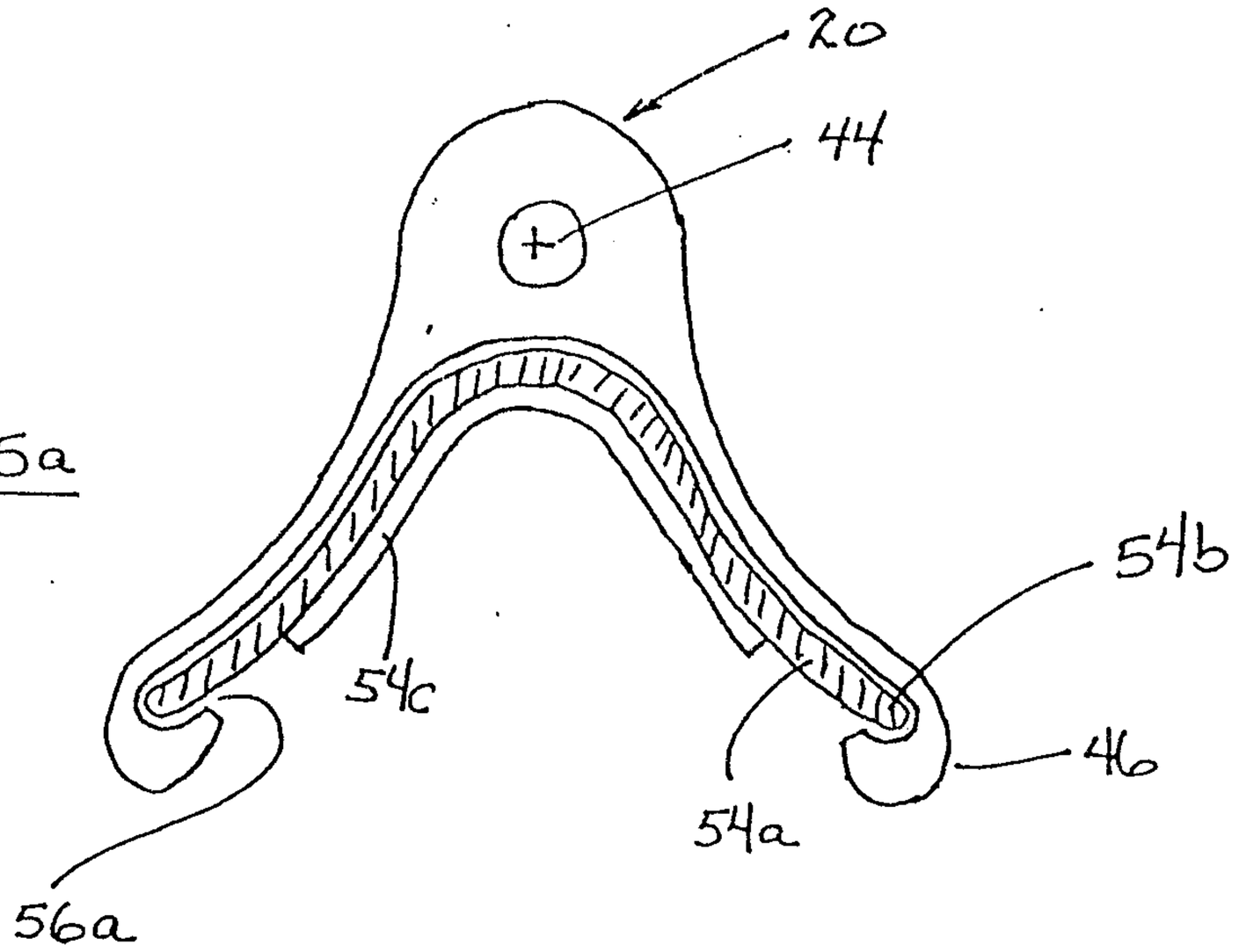

FIG. 5a

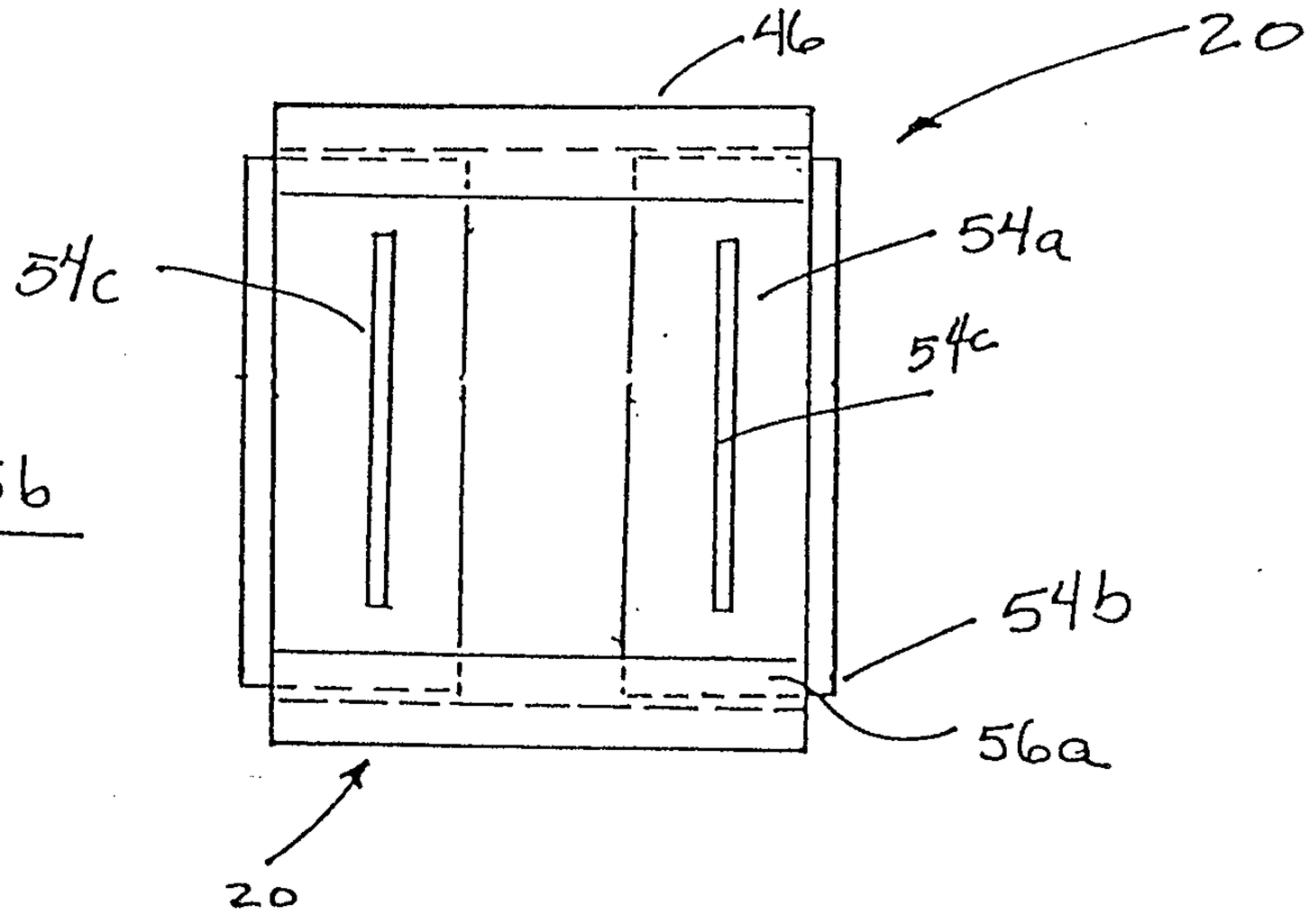

FIG. 5b

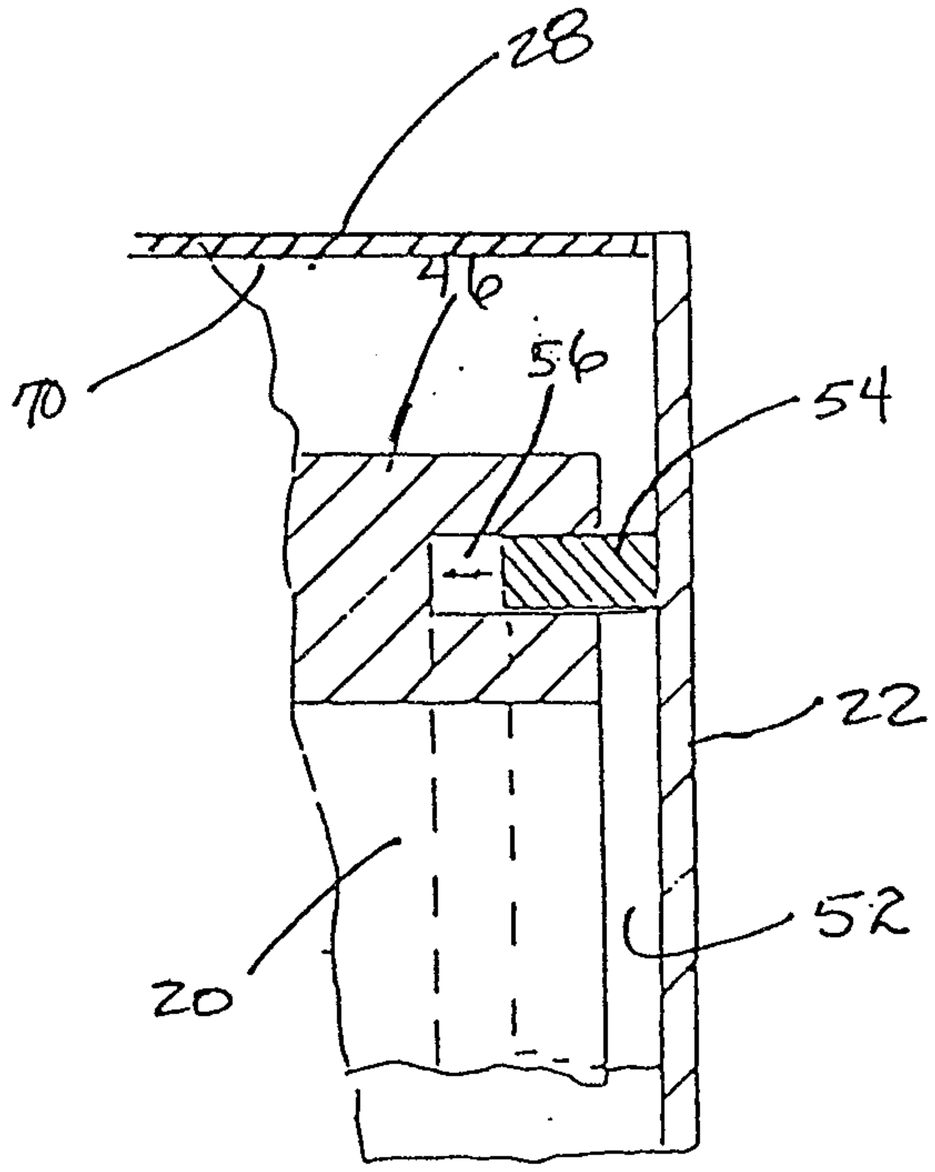

FIG. 6

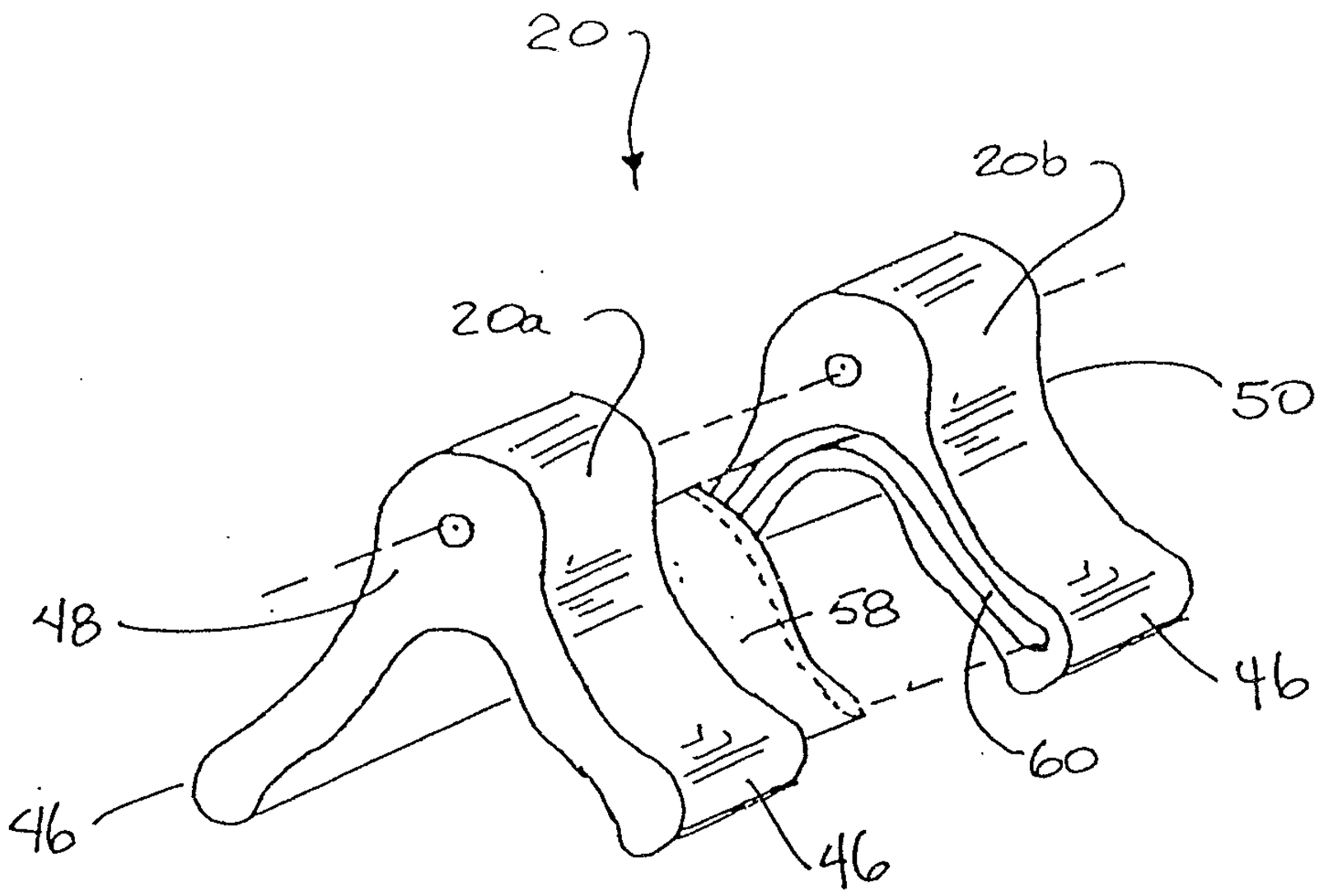
20
20b
20a
50
48
58
46
60
46
46

FIG. 7

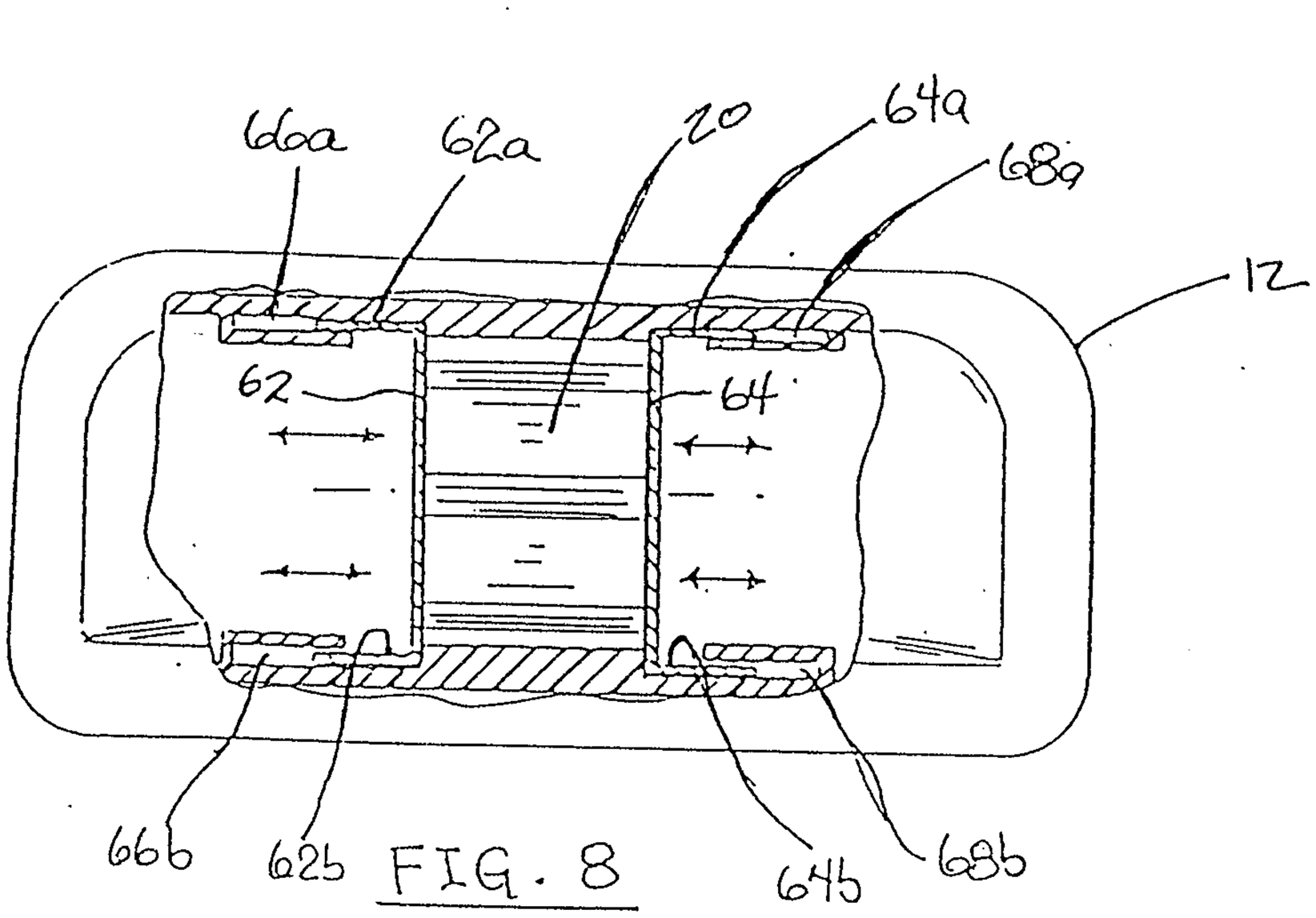
66a
62a
20
64a
68a
12
62
64
66b
62b
64b
68b

FIG. 8

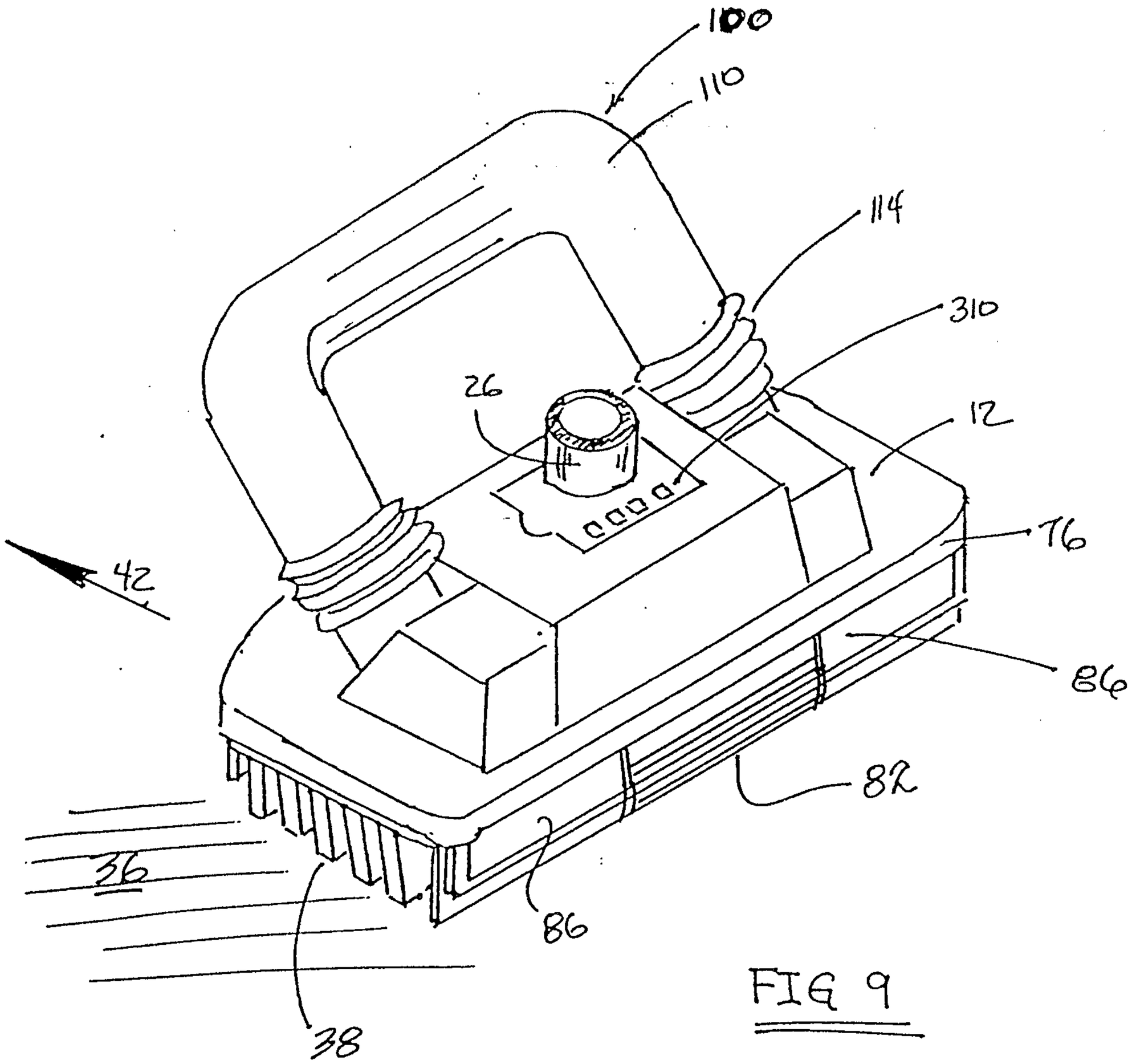

FIG 9

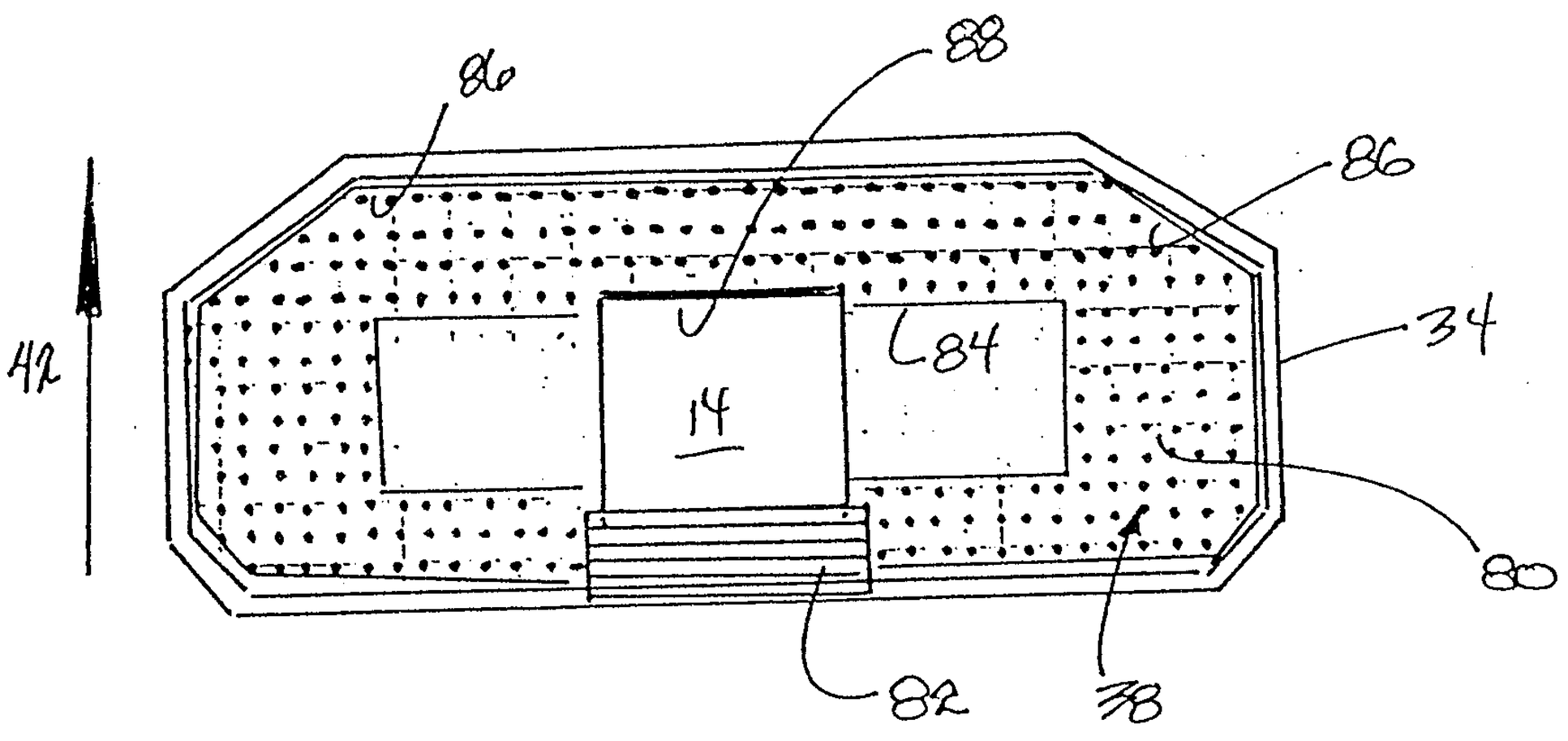

FIG. 10

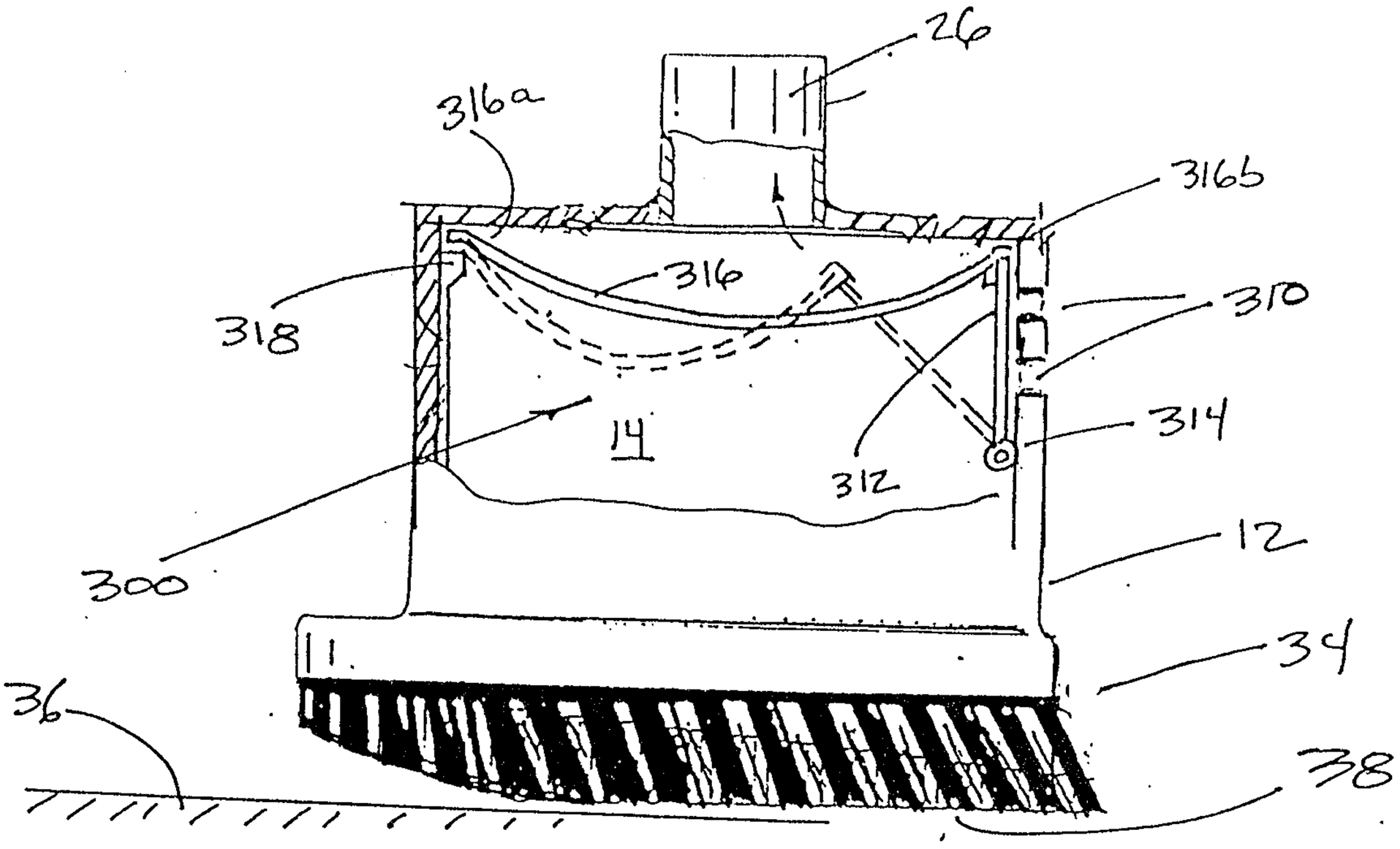

FIG. 11

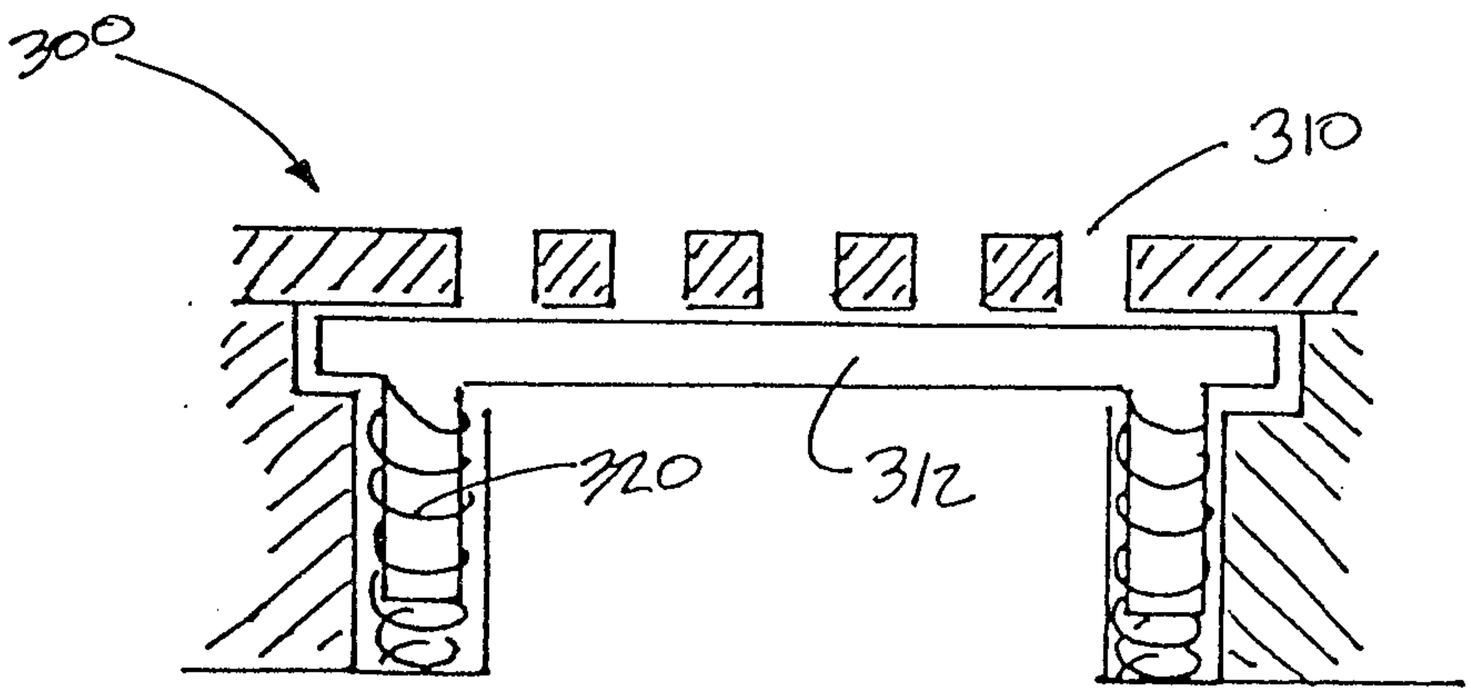

FIG. 12

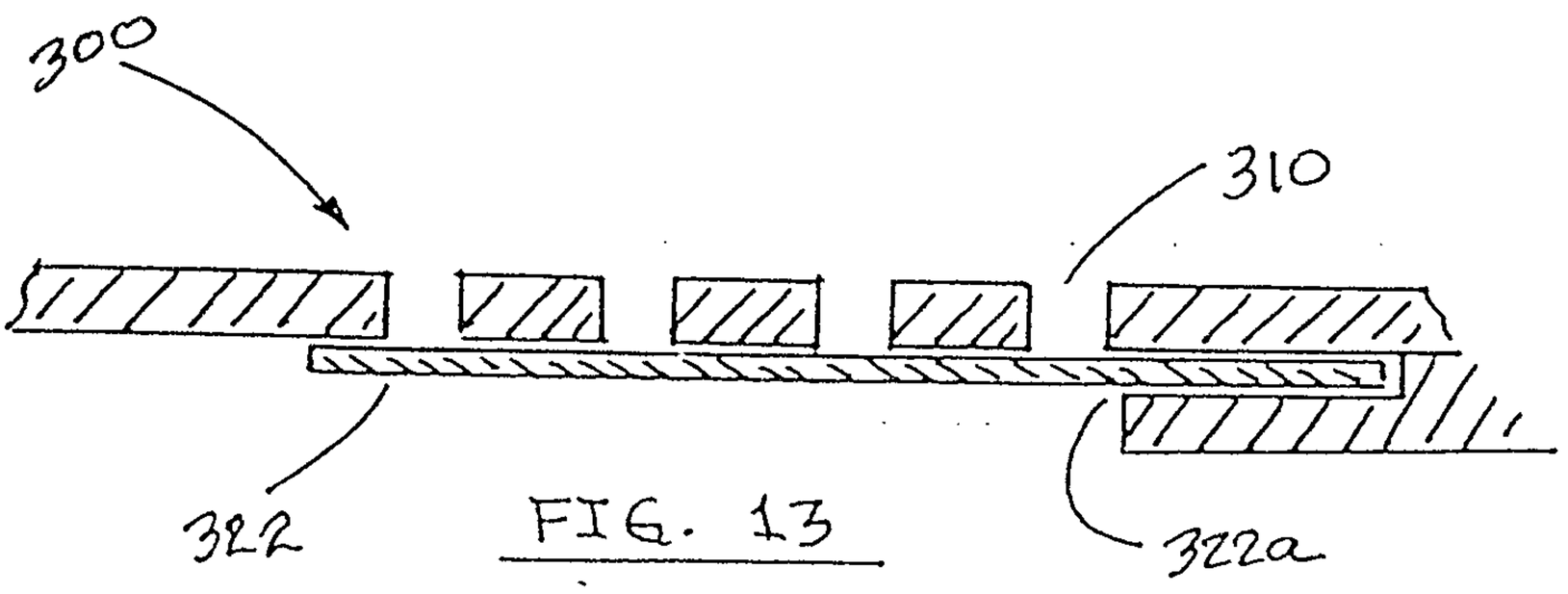

FIG. 13

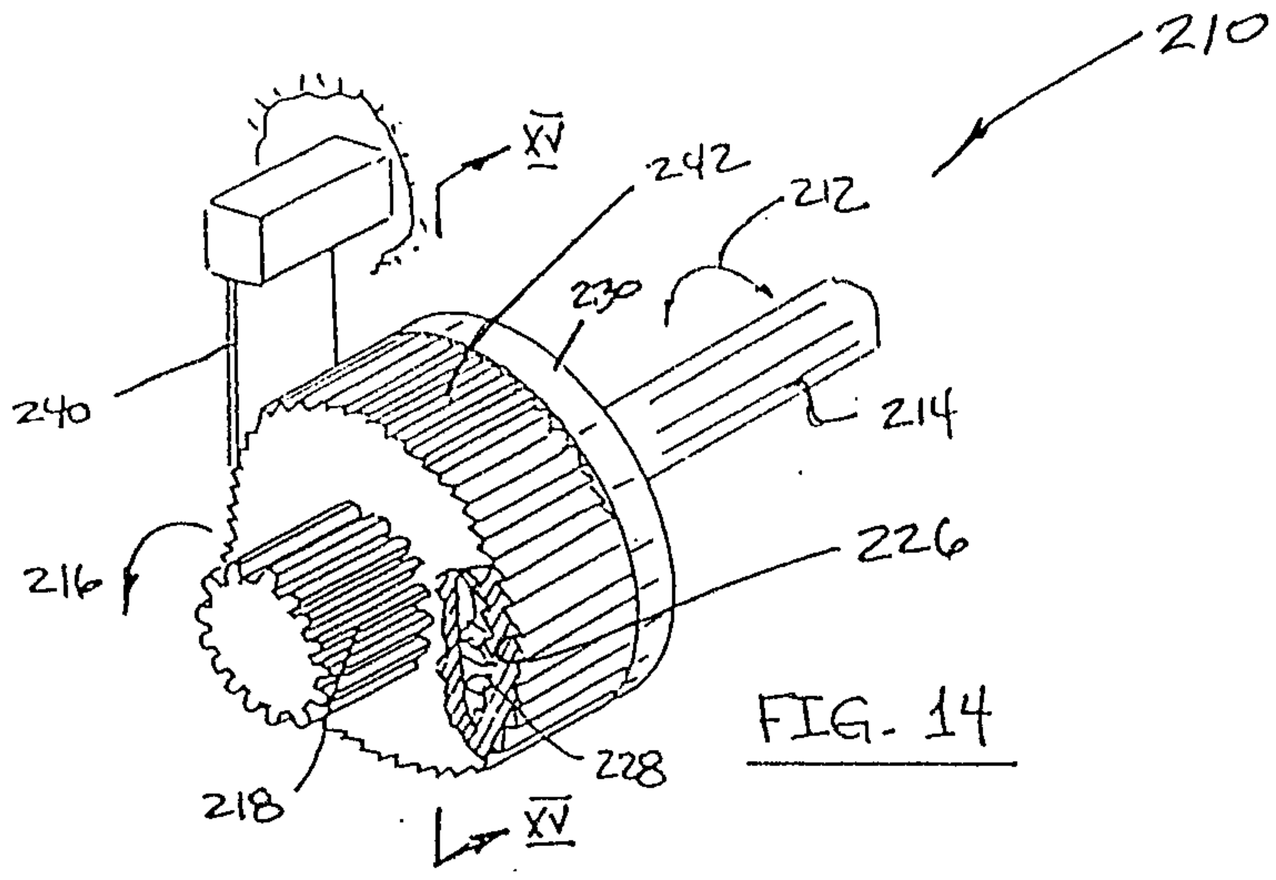

FIG. 14

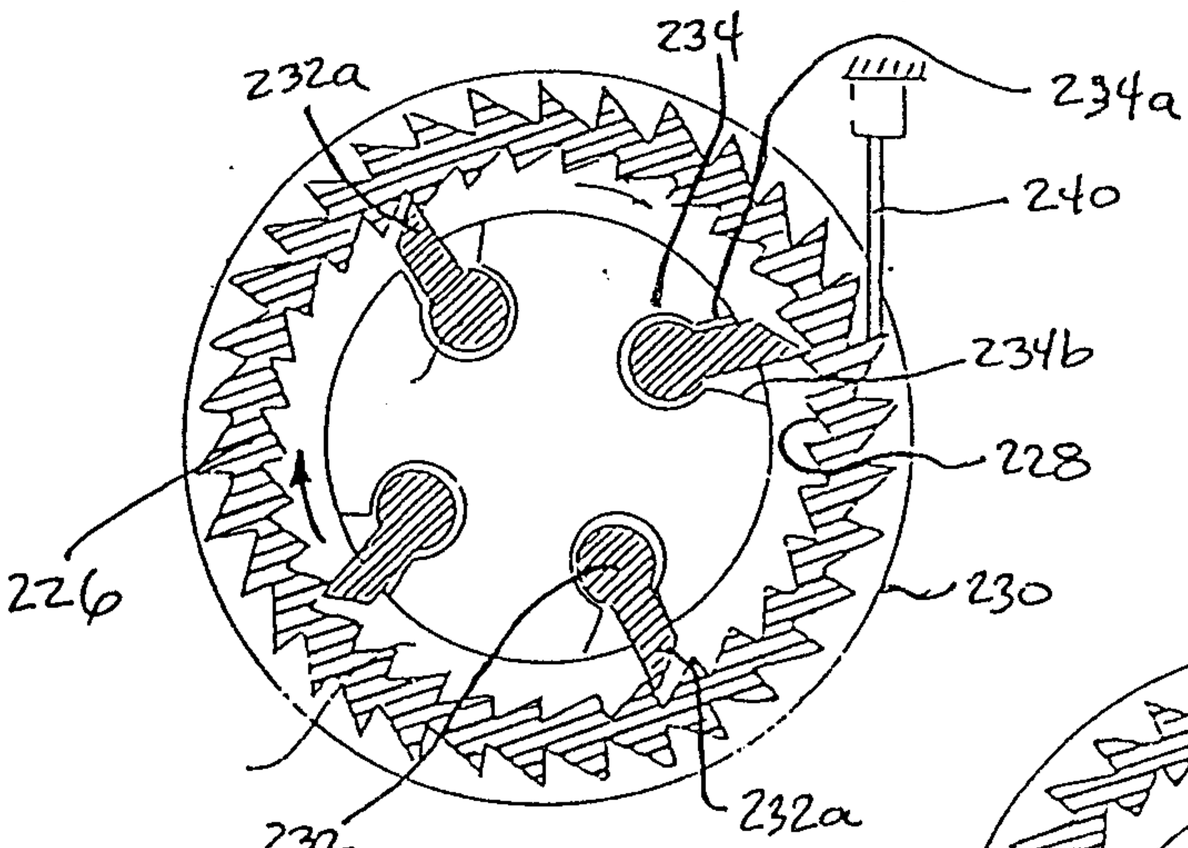

FIG. 15

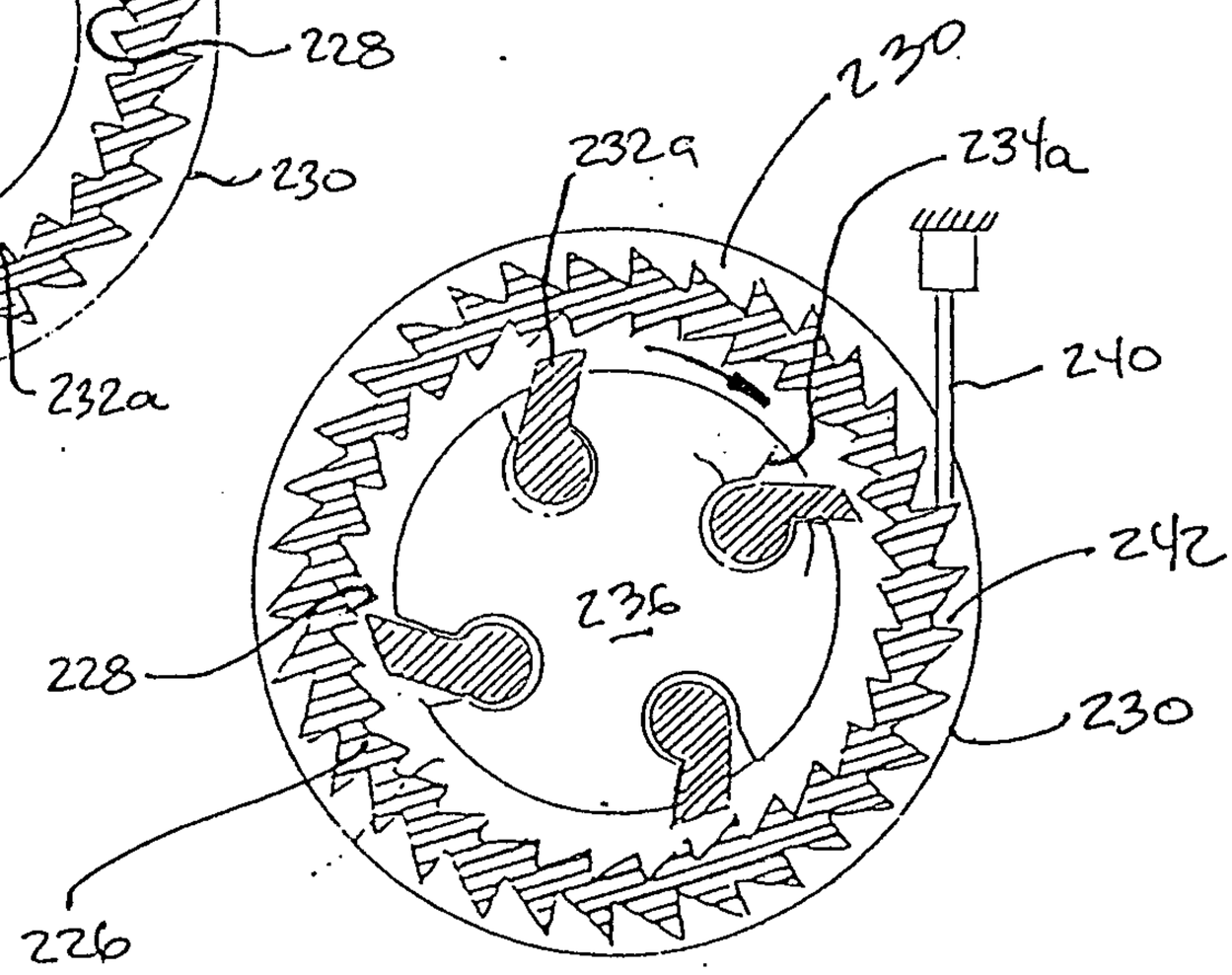

FIG. 16

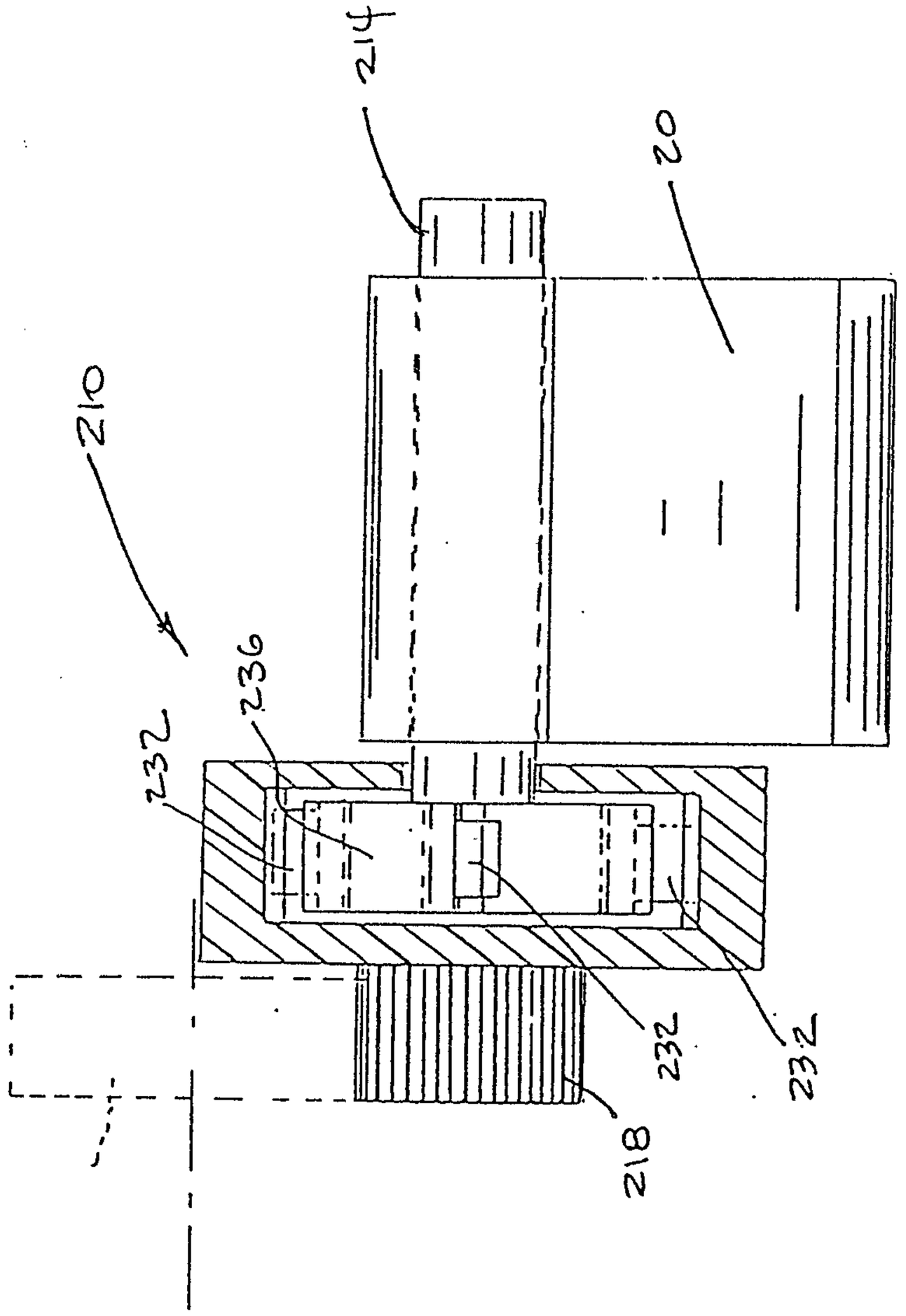

FIG. 17

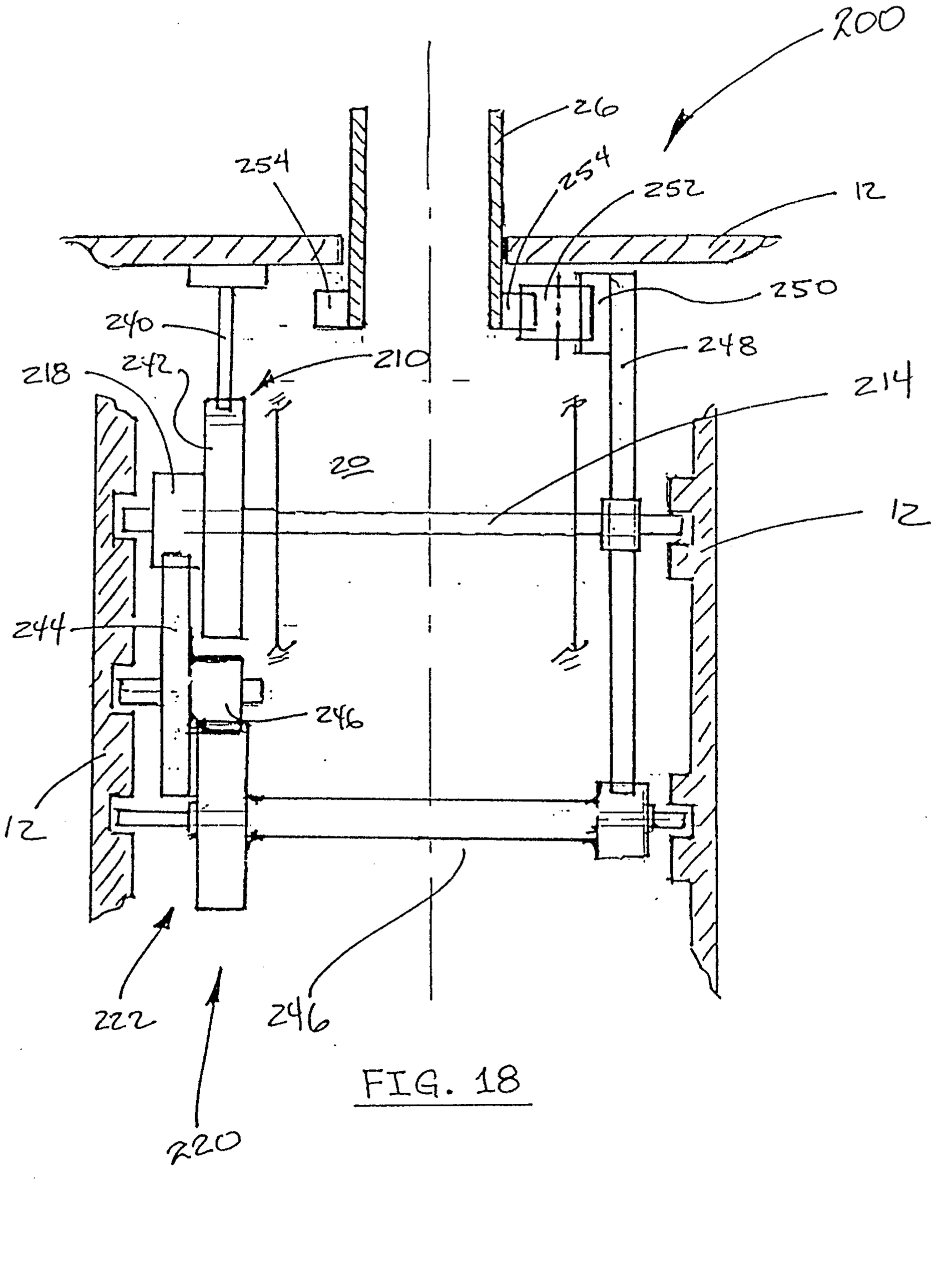
200
26
254
254
252
12
250
240
248
210
218
242
214
20
12
244
246
12
222
246
220

FIG. 18

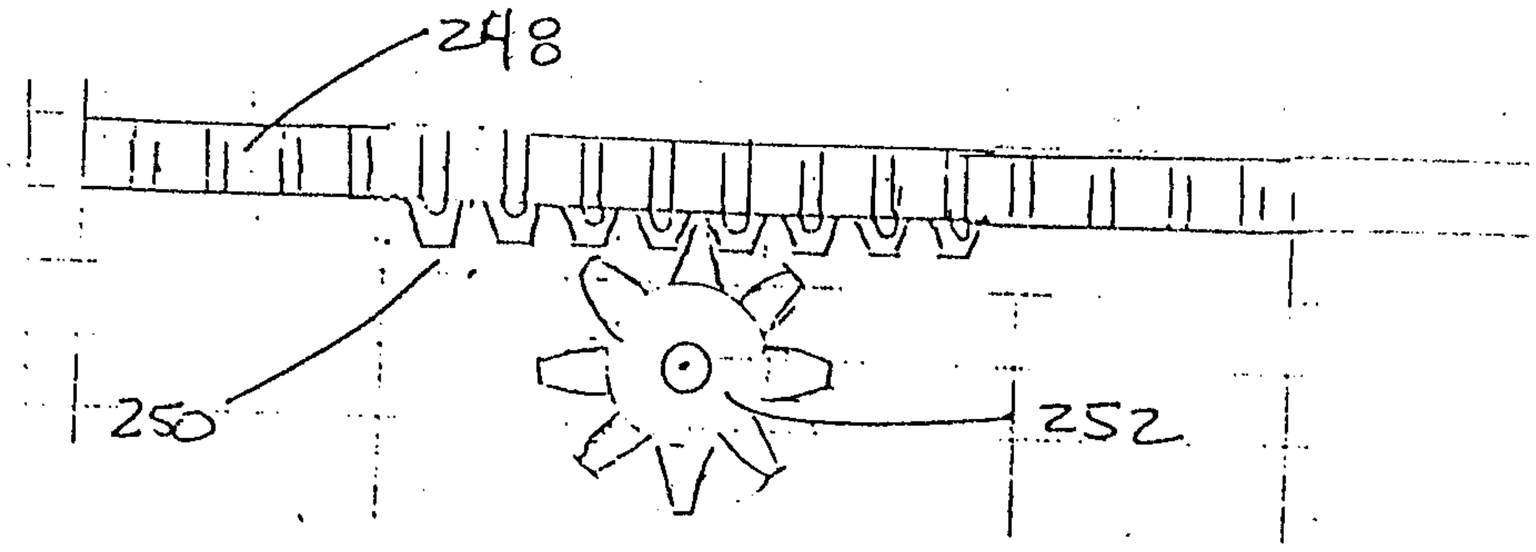

FIG. 19

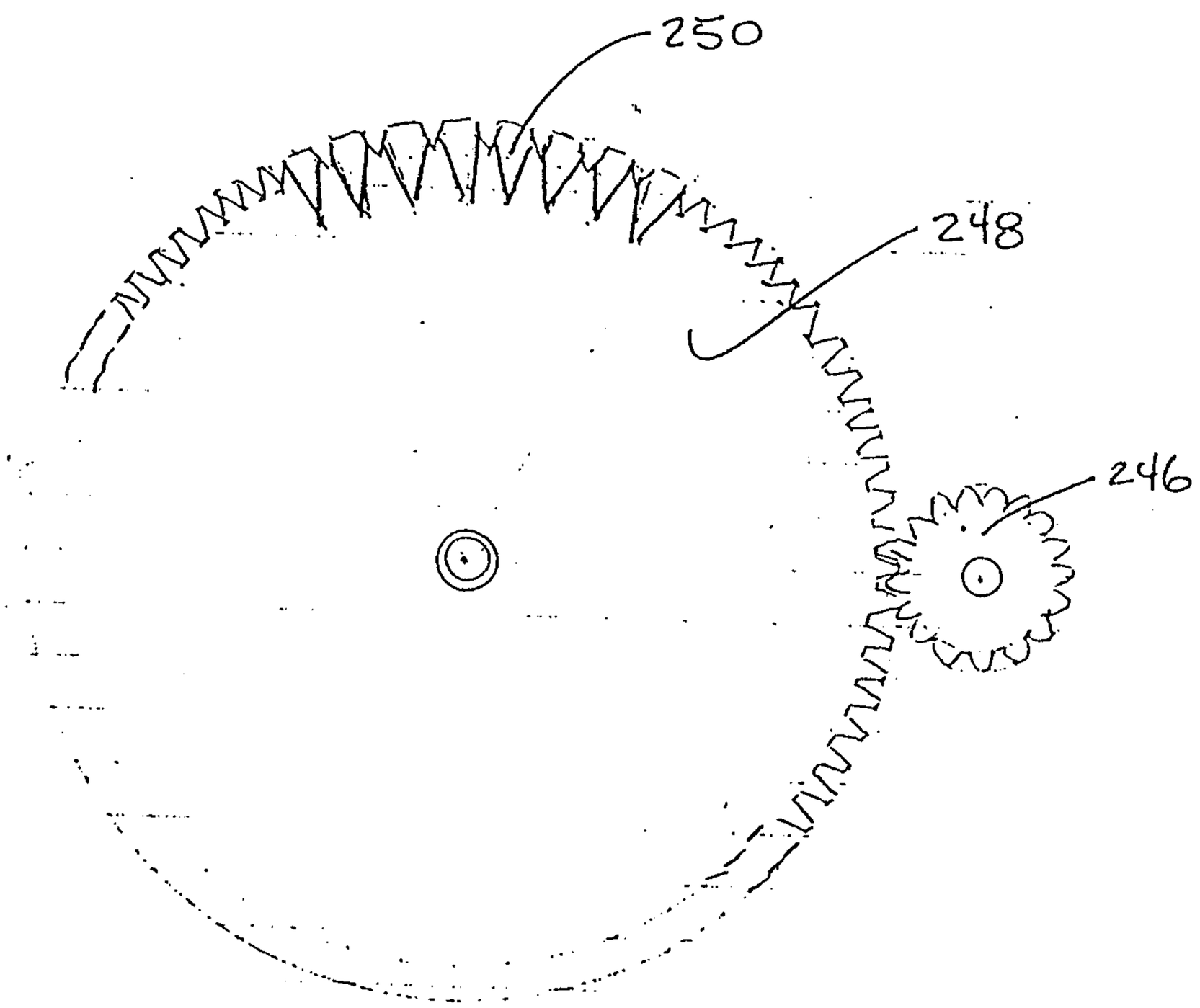

FIG. 20

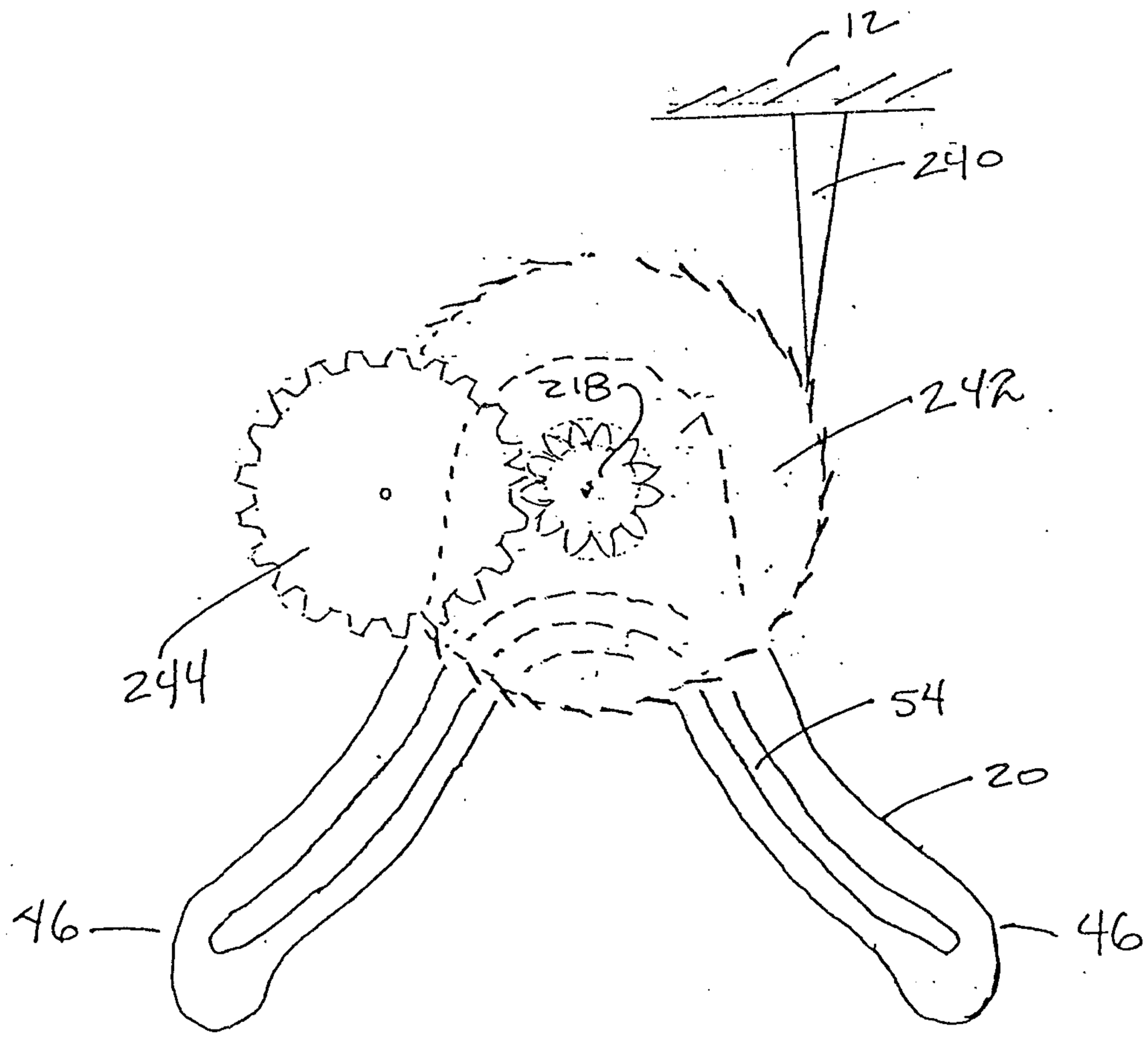

FIG. 21

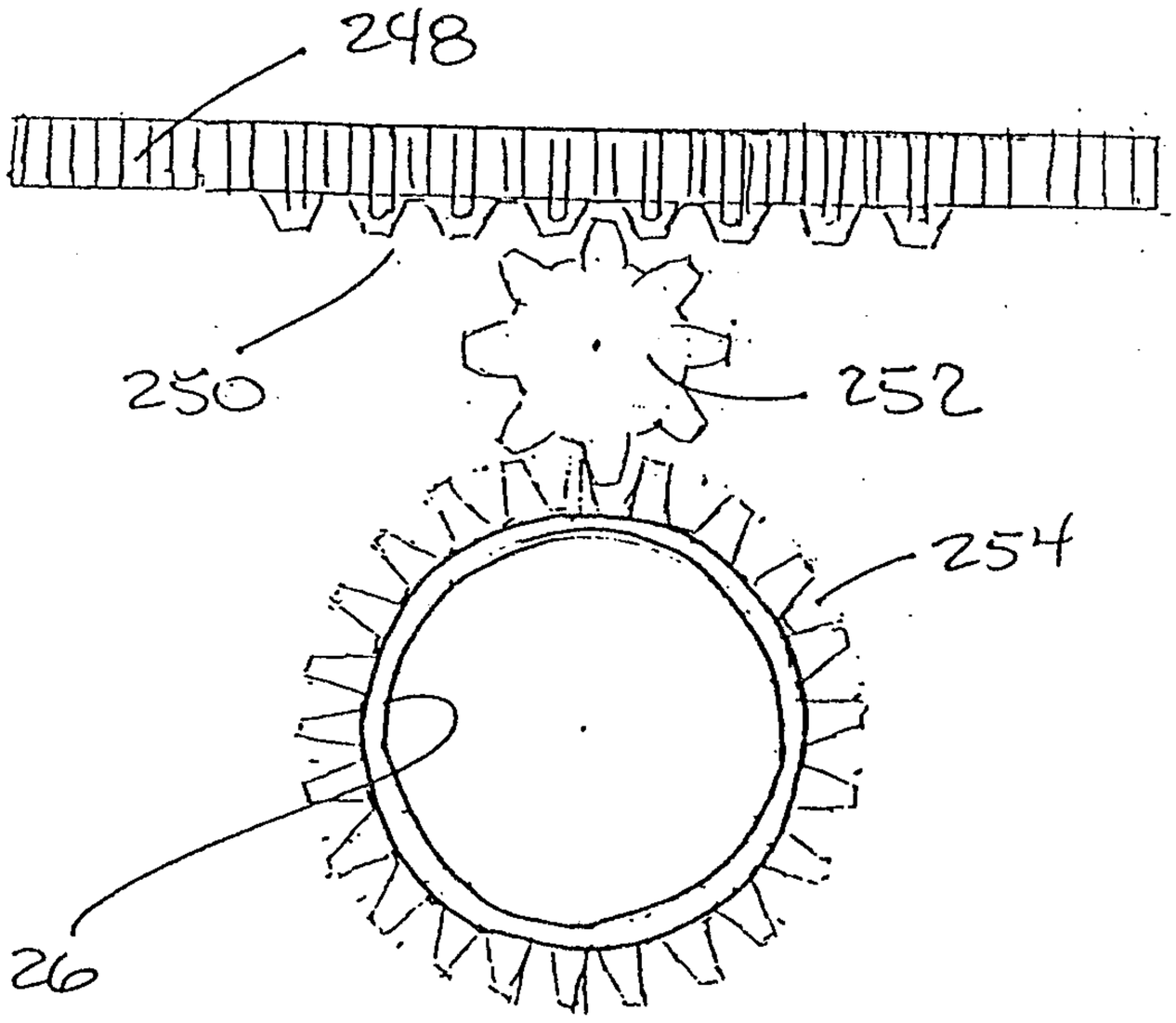

FIG. 22

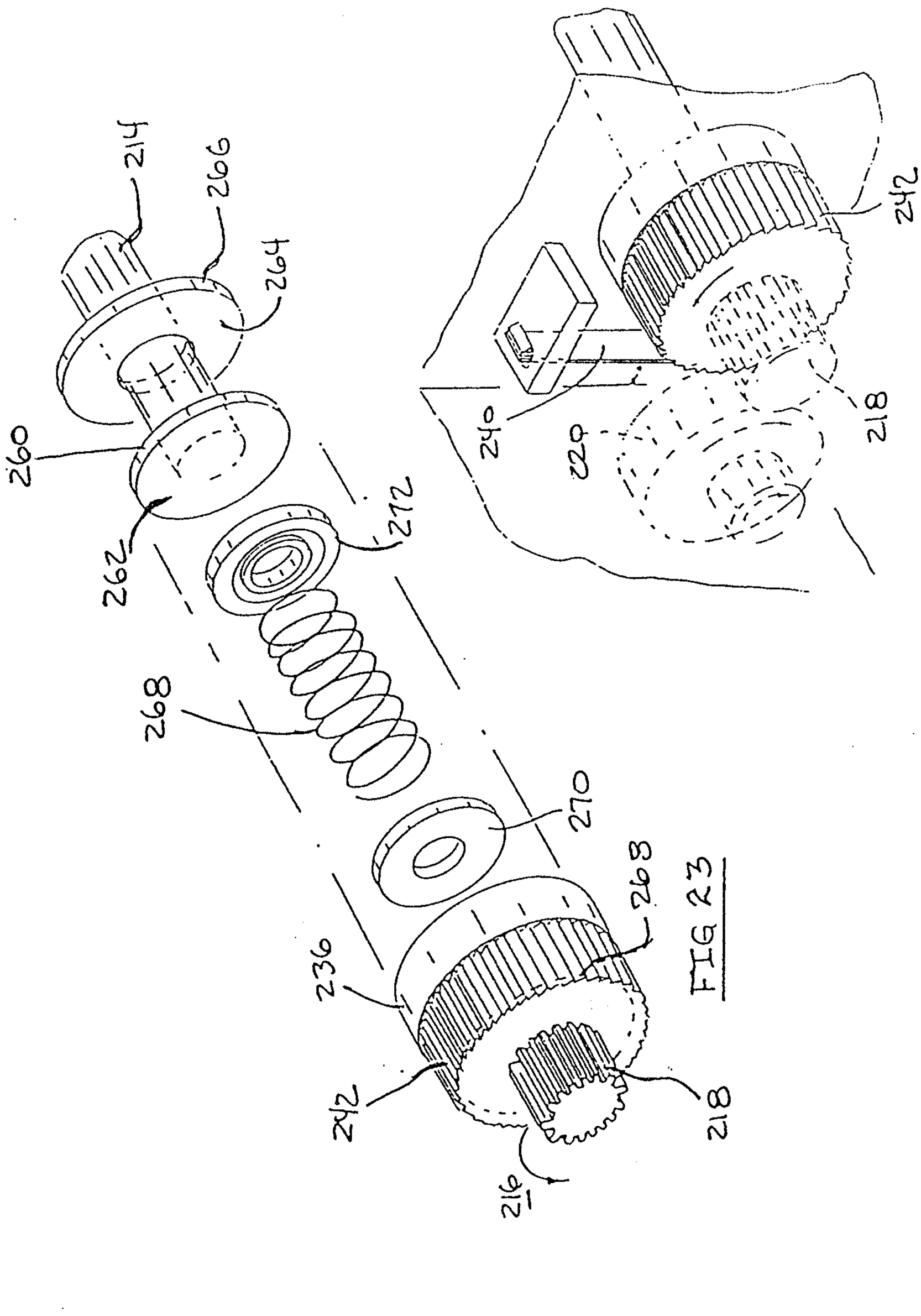
214
266
264
260
262
272
268
270
236
268
242
218
216
240
220
242
218

FIG. 24

FIG 23

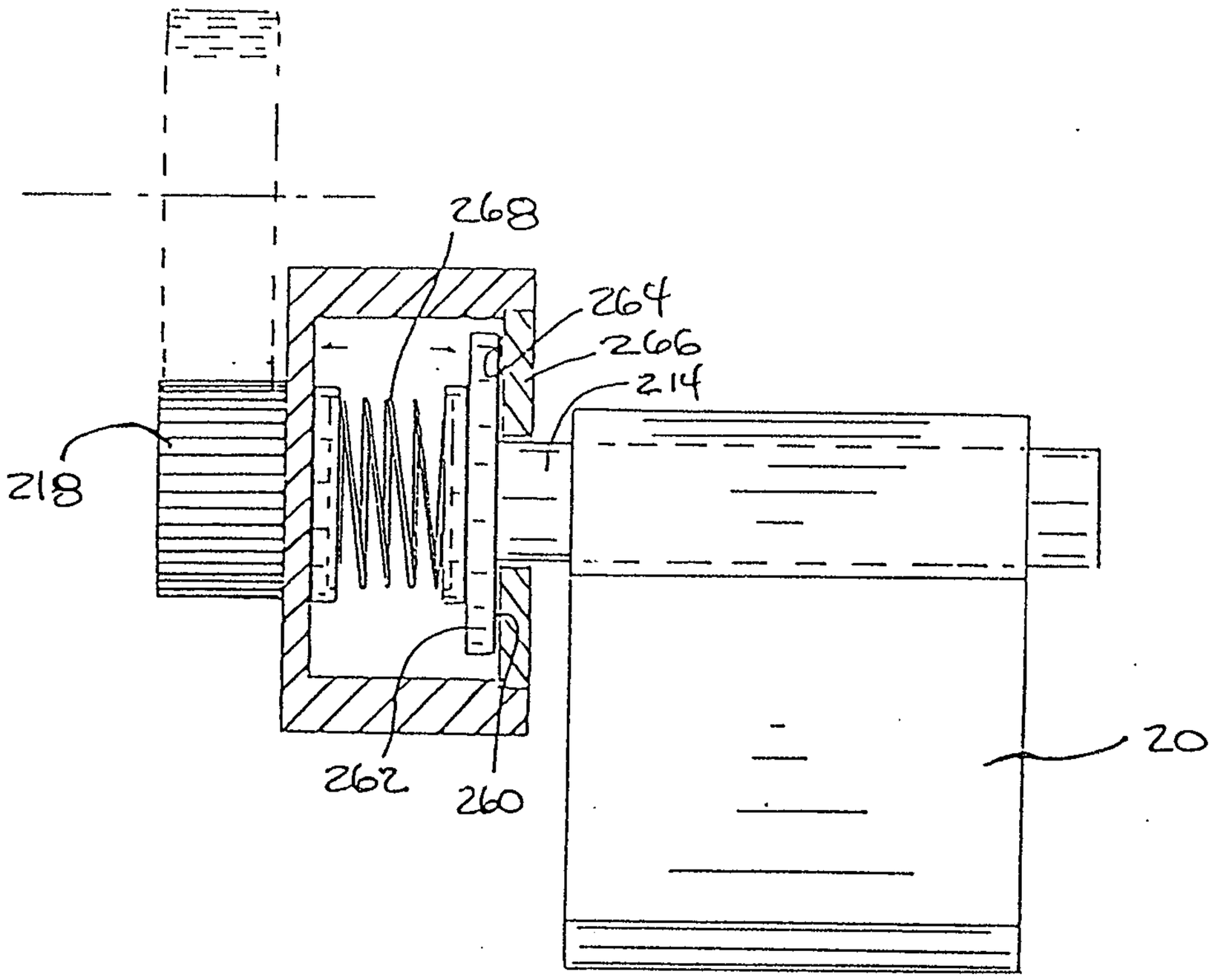

FIG. 25

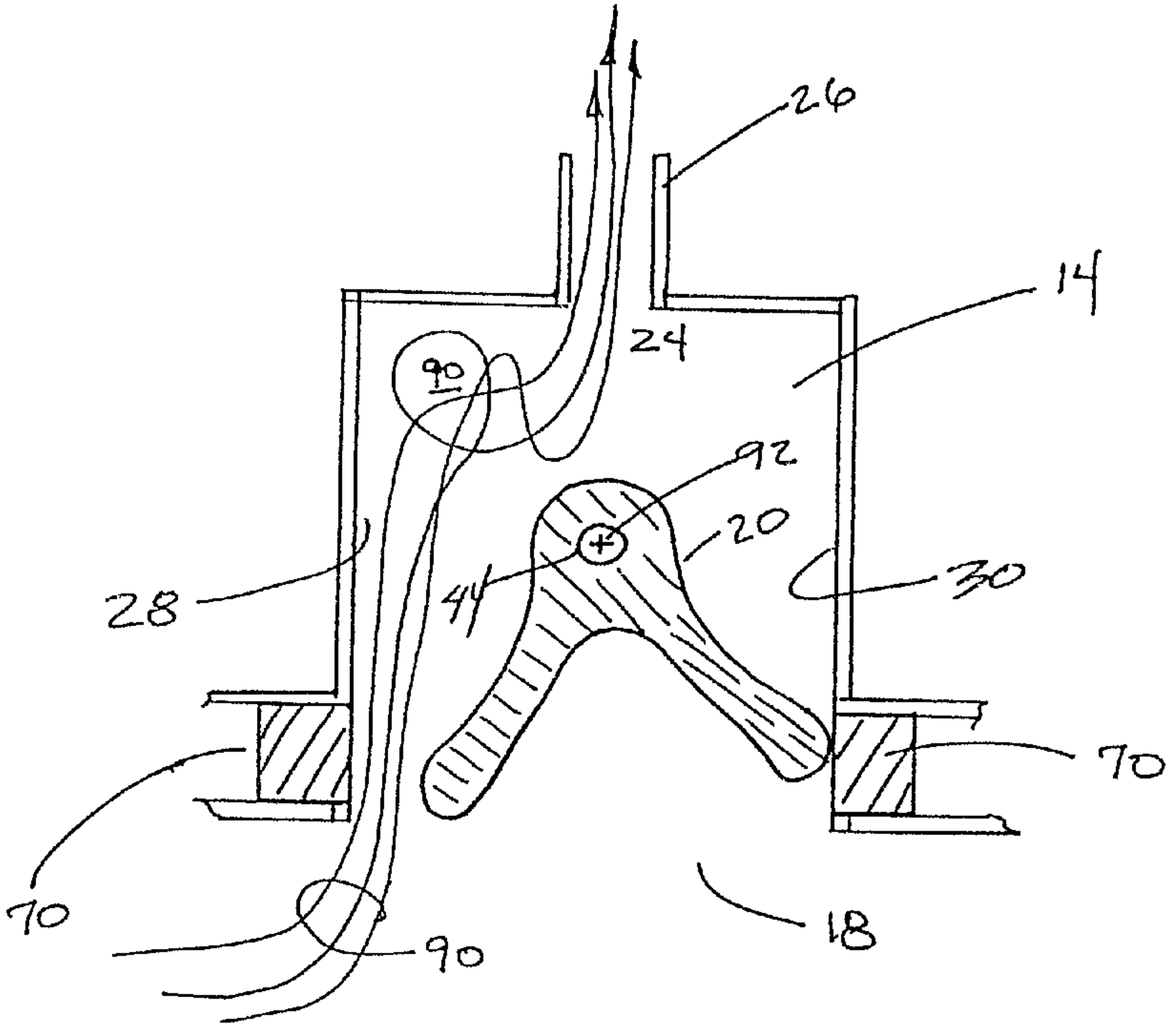
26
14
24
90
92
20
44
28
30
70
70
90
18