Aug. 26, 1941. K. MEER 2,253,721

COUNTER MECHANISM

Filed July 27, 1938

Fig. 1

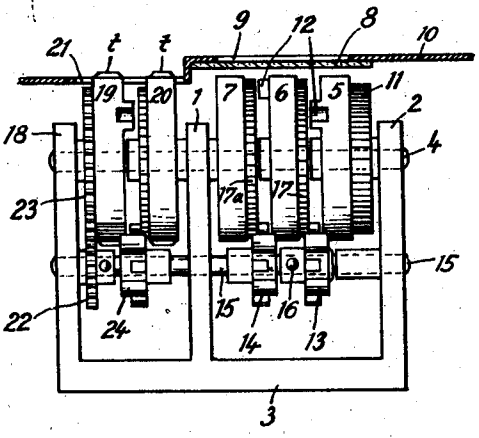

Fig. 2

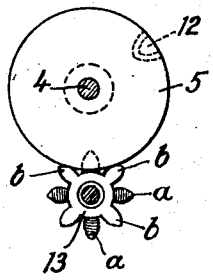

Fig. 3

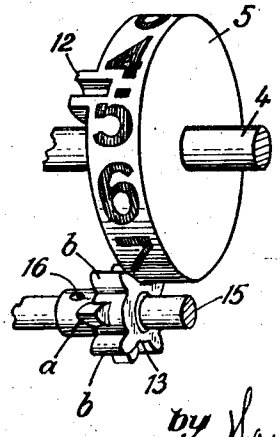

Inventor
Karl Meer

by Harold D. Penney,
Atty

Patented Aug. 26, 1941 2,253,721

UNITED STATES PATENT OFFICE

2,253,721

COUNTER MECHANISM

Karl Meer, Villingen, Schwarzwald, Germany, assignor to Kienzle Taxameter- und Apparate A.-G., Villingen, Schwarzwald, Germany

Application July 27, 1938, Serial No. 221,544
In Germany October 5, 1937

1 Claim. (Cl. 234—2)

This invention relates to a counter mechanism which has the usual counter which is advanced progressively and gives a visible indication and is also provided for control purposes with a printing counter which is provided, for example, with type printing wheels and is driven synchronously with the former counter and prints at least some of the same numerical value as that which is visibly indicated. In counting mechanisms of this kind the numeral wheels of the counter which gives a visible indication (hereinafter termed the indicating counter) are fitted behind a window made of glass, Celluloid or the like which is fitted in the casing of the counting mechanism. Therefore if an attempt is made to interfere with the numeral wheels in order to falsify the result indicated it is at least necessary to break this window.

The printing wheels of the printing counter, on the other hand, must project outwardly through an aperture in the casing of the instrument in order that they can be brought into contact during the printing process with a control voucher or ticket or the like which is to be printed. Now before the present invention it has been possible to adjust the numeral wheels of the indicating counter from the printing wheels of the printing counter in such a way that, after adjustment, the numeral wheels of the indicating counter indicate the same numerical value as those of the printing counter; if this is done the unauthorized interference will not be immediately noticeable.

The attempt has previously been made to obviate this possibility of falsification and for this purpose complicated and expensive safety devices have been provided.

According to the present invention, any possibility of adjusting the printing counter without detection and therefore any possibility of fraud is prevented in a simple and certain manner by providing, in the connection between the glass-protected indicating counter and the printing counter which is driven from it, a member which transmits the stepping movements of the indicating counter to the printing counter and locks the indicating counter, and therefore also the printing counter, so that an unauthorized adjustment of the indicating counter cannot be effected by tampering with the printing counter.

Preferably the locking member which prevents unauthorized interference with the printing and the indicating counter is constructed as a pinion which forms part of the Geneva wheel mechanism of the numeral wheels of the indicating counter and is fixed on the driving spindle of the printing counter and, owing to the flanks of its teeth coacting with the periphery of the pertaining numeral wheel of the indicating counter, prevents unauthorized adjustment of the driving spindle of the printing counter and therefore of its printing wheels which are accessible from the outside.

A locking device constructed in the manner described is particularly simple because with it no further safety devices are required in addition to the parts necessary for driving the two counters.

A counting mechanism constructed in accordance with the invention is illustrated by way of example in the accompanying drawing, in which

Figure 1 is a plan of the counting mechanism.

Figure 2 is a side elevation of one of the numeral wheels of the indicating counter and of the driving pinion which coacts therewith, while

Figure 3 is a perspective view of the parts shown in Figure 2.

Referring to the drawing, the numeral wheels 5, 6 and 7 of the indicating counter are revolubly mounted on a spindle 4 between the arms 1 and 2 of the frame 3. The numerical values which are indicated by the numeral wheels 5, 6 and 7 can be read through a slot 9 in the casing 10 of the instrument which is covered by a disc 8 made of glass, Celluloid or the like. As will later appear, any unauthorized interference with the numeral wheels 5, 6 and 7 is possible only after the window 8 has been broken with consequent detection.

To the numeral wheel 5 is rigidly connected a stepping wheel 11 which is stepped forward, by means of a stepping mechanism which may be of a known kind and is not illustrated in the drawing, in such a way that the first numeral wheel 5 of the indicating counter is intermittently stepped forward by one numerical unit.

The tens stepping is effected in known manner by means of a stepping tooth 12 which is provided on each of the numeral wheels 5 and 6 and which coacts at each complete revolution of its numeral wheel with one of the driving pinions 13 and 14 respectively.

The driving pinions 13 and 14 which effect the tens stepping of the numeral wheels are mounted on a spindle 15 which is journalled in the arms 1 and 2 of the frame 3, the driving pinion 13 being fixed to the spindle 15 by a pin 16, while the driving pinion 14 is mounted loosely on the spindle.

As will be seen most clearly from Figure 3,

each driving pinion is provided alternately with a narrow tooth *a* and a wide tooth *b*, considered in the direction of the axis of the spindle. As long as the stepping tooth 12 of the numeral wheel is not in engagement with the driving pinion the numeral wheel is free to rotate in the space which is bounded by two wide teeth *b* and a narrow tooth *a*. When a tens stepping has to take place, the tooth 12 of the numeral wheel engages the nearest wide tooth *b* of the driving pinion, so that the driving pinion is rotated by an amount corresponding to the distance between two wide teeth *b*. Since the teeth *a* and *b* of the driving pinions are in engagement at their other ends in the teeth 17 and 17*a* respectively of the next higher numeral wheel, this wheel is also stepped by one numerical unit. This arrangement and method of operation is well known.

On the spindle 4 which is extended beyond the arm 1 up to the arm 18 of the frame 3 are mounted the type wheels 19 and 20 of the printing counter which carry the type numerals 0–9 on their periphery, these numerals being mirror images of those they represent having regard to the printing process. The printing types *t* project outwardly through a slot 21 provided in the casing 10 so that they can be brought into contact with a control ticket or the like on which the printing is to take place.

The construction and operation of the type wheels 19, 20 and their tens stepping mechanism are the same as that of the numeral wheels 5, 6 and 7.

The printing counter is driven by means of the spindle 15 which fixedly carries a pinion 22 which meshes with teeth 23 on the first printing wheel 19. In order to effect the tens stepping from the type wheel 19 to the wheel 20, a pinion 24 is revolubly mounted on the spindle 15. This pinion is of about the same construction as the pinions 13 and 14, but reversed end for end.

The important feature of the invention now is that the pinion 13 is fixed by the pin 16 to the driving spindle 15 of the printing counter 19, 20. Then, if an attempt be made to alter one of the two type wheels 19 or 20 by moving the type *t* which project through the slit 21, the intended rotation is transmitted through the agency of the teeth 23 and the pinion 22 to the spindle 15 and therefore to the pinion 13 which, however, cannot be rotated, because according to the intended direction of rotation one of the two wide teeth *b* of the driving pinion 13 which coact with the numeral wheel 5 bears against the periphery of the numeral wheel. An adjustment therefore of the printing counter is prevented in this simple manner.

I claim:

A counting mechanism comprising a casing, a numeral wheel mounted in said casing, a window in said casing through which said numeral wheel is visible, a type wheel mounted in said casing, a slot in said casing through which said type wheel is accessible for printing, a spindle revolubly mounted in said casing, a pinion fast on said spindle having teeth which coact with the periphery of said numeral wheel, a tooth on said numeral wheel by which a stepping movement of said pinion is periodically effected and means for transmitting the movements of said pinion and spindle to said type wheel, said periphery coacting with the pinion to lock the pinion when at rest.

KARL MEER.