PCT WORLD INTELLECTUAL PROPERTY ORGANIZATION
International Bureau

INTERNATIONAL APPLICATION PUBLISHED UNDER THE PATENT COOPERATION TREATY (PCT)

(51) International Patent Classification 5 :
B61B 5/02, B61C 11/00, 13/04, 15/08

A1

(11) International Publication Number: **WO 94/23980**

(43) International Publication Date: 27 October 1994 (27.10.94)

(21) International Application Number: PCT/AU94/00201

(22) International Filing Date: 19 April 1994 (19.04.94)

(30) Priority Data:
PL 8394 21 April 1993 (21.04.93) AU

(71)(72) Applicant and Inventor: BISHOP, Arthur, Ernest [AU/AU]; 21 Seaman Street, Greenwich, NSW 2065 (AU).

(74) Agent: F.B. RICE & CO.; P.O. Box 117, 28a Montague Street, Balmain, NSW 2041 (AU).

(81) Designated States: AT, AU, BB, BG, BR, BY, CA, CH, CN, CZ, DE, DK, ES, FI, GB, GE, HU, JP, KG, KP, KR, KZ, LK, LU, LV, MD, MG, MN, MW, NL, NO, NZ, PL, PT, RO, RU, SD, SE, SI, SK, TT, UA, US, UZ, VN, European patent (AT, BE, CH, DE, DK, ES, FR, GB, GR, IE, IT, LU, MC, NL, PT, SE), OAPI patent (BF, BJ, CF, CG, CI, CM, GA, GN, ML, MR, NE, SN, TD, TG).

Published
With international search report.

(54) Title: RAIL GRIPPING VEHICLE

(57) Abstract

A track (17) and a vehicle to operate thereon, the track (17) comprising two laterally spaced apart sets of running faces (18, 20) each of which having an upper running face (18) and a lower running face (20), the vehicle having at least one axle assembly (12) with at least a first set of two wheels (6) journalled thereon and engaged with the respective upper running faces (18) and a second set of two wheels (19) journalled thereon and adapted to engage with the respective lower running faces (20), characterised in that the second set of wheels (19) are forced into running engagement with the respective lower running faces (20) by at least one actuating mechanism (21, 24) which varies the force of engagement by means of a sensed signal indicating loss of adhesion or imminent loss of adhesion of the first set of wheels (6) with respect to the upper running faces (18). Also disclosed is an arrangement wherein the first set of wheels (6) are inwardly inclined and mounted on a self steering bogie (7) having a set of freely rotating flanged steering wheels supported from the axle assembly (12) and engaging the upper running faces (20).

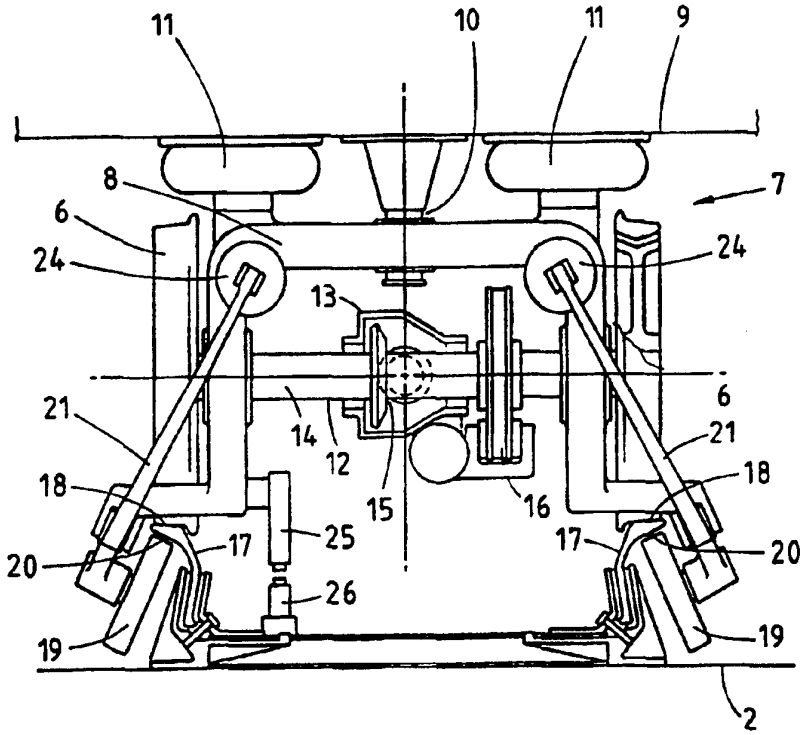

FOR THE PURPOSES OF INFORMATION ONLY

Codes used to identify States party to the PCT on the front pages of pamphlets publishing international applications under the PCT.

AT	Austria	**GB**	United Kingdom	**MR**	Mauritania
AU	Australia	**GE**	Georgia	**MW**	Malawi
BB	Barbados	**GN**	Guinea	**NE**	Niger
BE	Belgium	**GR**	Greece	**NL**	Netherlands
BF	Burkina Faso	**HU**	Hungary	**NO**	Norway
BG	Bulgaria	**IE**	Ireland	**NZ**	New Zealand
BJ	Benin	**IT**	Italy	**PL**	Poland
BR	Brazil	**JP**	Japan	**PT**	Portugal
BY	Belarus	**KE**	Kenya	**RO**	Romania
CA	Canada	**KG**	Kyrgystan	**RU**	Russian Federation
CF	Central African Republic	**KP**	Democratic People's Republic of Korea	**SD**	Sudan
CG	Congo			**SE**	Sweden
CH	Switzerland	**KR**	Republic of Korea	**SI**	Slovenia
CI	Côte d'Ivoire	**KZ**	Kazakhstan	**SK**	Slovakia
CM	Cameroon	**LI**	Liechtenstein	**SN**	Senegal
CN	China	**LK**	Sri Lanka	**TD**	Chad
CS	Czechoslovakia	**LU**	Luxembourg	**TG**	Togo
CZ	Czech Republic	**LV**	Latvia	**TJ**	Tajikistan
DE	Germany	**MC**	Monaco	**TT**	Trinidad and Tobago
DK	Denmark	**MD**	Republic of Moldova	**UA**	Ukraine
ES	Spain	**MG**	Madagascar	**US**	United States of America
FI	Finland	**ML**	Mali	**UZ**	Uzbekistan
FR	France	**MN**	Mongolia	**VN**	Viet Nam
GA	Gabon				

Rail Gripping Vehicle

Technical Field

The present invention is related to a rail or track guided vehicle system. Whilst the invention is according to one embodiment directed towards and primarily described with reference to automated guideway rapid transit systems, it is considered that the invention is suitable for use with other forms of rail or track guided vehicle systems used for transporting passengers or freight or for use in materials handling systems.

Background

An automated guideway system utilising vehicles which each accommodate, for example, between eight and twenty four passengers would typically operate on guideways separated from other vehicular traffic and pedestrians. Due to economic considerations, the installation of automated guideway transit systems in the suburbs or central business districts of cities will necessitate that the guideway track be elevated above street level rather than underground and will generally be carried on a structure comprising concrete or steel beams supported on pillars. Such guideway tracks must be capable of sharp turns at city intersections in order to reduce the cost of building resumptions.

In order to be acceptable in the abovementioned environment, the guideways should be of least width in order to minimise the visual impact and shade, and the system must also operate with low noise and vibration levels. In order for such systems to be easily accessible to users, the elevated guideways should be able to descend and ascend on ramps, so that vehicles can be accessed from street level when necessary. In addition, the vehicles must also have adequate acceleration and braking capability, and be capable

of very short emergency stopping distances needed if they are to operate at high speeds and at close intervals.

Typically, in prior art rapid transit systems such as the TNT Harbourlink operating at Darling Harbour, Sydney which operates on the Von Roll system and detailed in Australian Railways, Volume 2, No 1, Feb/March, 1988, the vehicles are equipped with rubber tyred pneumatic main drive wheels with solid rubber tyred wheels engaging the side faces of the guideway beam (or track) for directional control. Additional solid wheels are provided clear of the underside of the upper flange of the beam as a safeguard against overturning. The main wheels are generally pneumatic, which due to their compliance, provide poor lateral and rolling support when operating on a narrow guideway and therefore precludes operation at high speed. If rigid wheels are used, made from steel for example, the stability problems of the abovementioned pneumatic tyred vehicles can be overcome. Flanges can also be used on such steel wheels to provide lateral constraint to the vehicle on the guideway.

However, some problems exist with utilising vehicles with either rigid or pneumatic tyred driven wheels which are detrimental to the operation of known prior art transit systems. One problem is that such vehicles are prone to slippage during braking, acceleration or grade climbing, particularly in wet or icy conditions. This problem is even more serious when considering the operation of vehicles on an automated guideway system as they are insensitive to weather conditions. Another problem associated with driven rigid wheels, and in particular to steel wheels, is that they tend to be noisy, particularly if provided with a flange that comes in contact with the side of the guideways in turns.

Prior art automated rapid transit systems which do not suffer from slippage problems during wet or icy conditions are The M-Bahn System, detailed in the paper entitled The German M-Bahn System by H. Weinberger in The Journal of Advanced Transportation, Vol. 19:1, pages 73-84, 1985 and that detailed in the paper entitled The Taxi 2000 Personal Rapid Transit System by J. Edward Anderson, in the Journal of Advanced Transportation, Vol. 22, Spring 1988. However, these systems operate on electromagnetic linear induction motors for propulsion rather than conventional electric motor drive to the wheels. Whilst such systems overcome some of the earlier mentioned slippage problems, during acceleration or grade climbing, they inevitably lack emergency braking capability needed to achieve close spacing of vehicles when travelling at higher speeds. Moreover, they are costly and less efficient than direct drive systems. The leakage of electromagnetic flux from such linear motors is also a problem. Such systems may not be suited to use when the guidance track incorporates sharp horizontal or vertical curves, due to the close clearance required between the active member of the linear motor suspended on the vehicle and the motor plate supported on the guideway.

Disclosure of Invention

It is an object of the present invention to provide a track guided vehicle system having driven or non-driven wheels which substantially overcomes the problem of slippage whether during grade climbing, braking or emergency stopping.

The present invention can be utilised in conjunction with the self steering bogie as disclosed in our pending International Patent application No PCT/AU94/00046.

In one aspect the present invention is a track means and a vehicle to operate thereon, the track means comprising two spaced apart sets of running faces each of which having an upper running face and a lower running face, the vehicle having at least one axle assembly with at least a first set of two wheels journalled thereon and engaged with said respective upper running faces and a second set of two wheels journalled thereon and adapted to engage with the respective lower running faces, characterised in that the second set of wheels are forced into running engagement with the respective lower running faces by at least one actuating mechanism which varies the force of engagement by means of a sensed signal indicating loss of adhesion or imminent loss of adhesion of the first set of wheels with respect to the upper running faces.

Preferably the actuating mechanism is adapted for movement of the second set of wheels between an engaged position and an unengaged position where the second set of wheels are not in contact with the lower running faces.

Preferably the sensed signal indicating loss of adhesion or imminent loss of adhesion of the first set of wheels is a measure of one or more of track means incline, track condition, loading of the vehicle or brake pressure or torque applied to the first set of wheels.

Preferably the track means comprises of two spaced apart rails each having one of the sets of running faces.

In a second aspect the invention is a track means and a vehicle to operate thereon, the track means comprising laterally spaced apart sets of running faces each of which having an upper running face and a lower running face, the vehicle having at least one self steering bogie symmetrical about a centreline plane having a principal axle assembly having a flanged principal wheels whose axes are inclined to

each other and the centreline plane and engaged with said upper running faces, a pair of freely rotating steering wheels also having axes inclined to each other and the centreline plane and engaged with said upper running faces, said steering wheels being supported from the principal axle assembly by a support structure about an axis lying on the centreline plane and inclined to the horizontal such that the steering wheels are longitudinally spaced apart from the principal wheels, and a pair of grip wheels supported from the principal assembly and engaged with said respective lower running faces, characterised in that the grip wheels are forced into running engagement with the respective lower running faces by at least one actuating mechanism which varies the force of engagement by means of a sensed signal indicating loss of adhesion or imminent loss of adhesion of the principal wheels with loss of adhesion of the principal wheels with respect to the upper running faces.

Brief Description of Drawings

The invention will now be described by non-limiting examples with reference to the following drawings.

Figure 1 depicts a perspective view of a portion of a guideway system showing a boarding station and vehicles travelling thereon.

Figure 2 depicts one embodiment of a vehicle travelling on the guideway system in accordance with the present invention.

Figure 3 is a cross section through one wheel set of a bogie of the vehicle depicted in Figure 2.

Figure 4 is an enlarged side view of the wheel set depicted in Figure 3 showing a grip wheel in accordance with the present invention.

Figure 5 is a front sectional view of a wheel set of a bogie for a vehicle in a second embodiment of the present invention.

Figure 6 is a side view of the bogie of the vehicle shown in Figure 5.

Figure 7 is a partial cross section though the drive wheel set of the bogie shown in Figure 6.

Figure 8 is an enlarged cross sectional view of the wheel/grip wheel and rail arrangement through the centreline of the grip wheel.

Figure 9 is an enlarged partial cross sectional view of the grip wheel and its actuating mechanism.

Mode for Carrying Out Invention

In a first embodiment Figures 1 and 2 depict vehicles 1 traversing a segment of an elevated guideway 2 which includes a station or boarding area 3 having ramps 4 at each end steeply inclined to reduce to a minimum the space occupied by the station. Guideway 2 is supported by pillars 5. Vehicle 1 has wheels 6 mounted on two bogies 7, one of which is depicted in Figure 3. Bogies 7 are preferably identical and pivoted to vehicle 1 to allow sharp turns to be negotiated. One or both bogies 7 are provided with collector brushes (not shown) which contact longitudinal conductors associated with the guideway 2 in a usual manner to provide power.

Referring to Figure 3, bogie 7 has a substantially saddle shaped support member 8 which is pivotally connected to the underside of floor structure 9 of vehicle 1 by means of pivot joint 10. Two air springs 11 also connect support member 8 to floor structure 9 on opposite sides of pivot joint 10 in order to allow limited movement therebetween and to allow for roll and adjustment of ride height.

A principal axle assembly 12 mounted on support member 8 comprises a housing 13 which contains a drive gear mechanism 15 for driving axle shaft 14 which has drive wheels 6 at each end thereof. The drive gear mechanism 15 being driven by an electric motor (not shown). The axle shaft 14 is provided with a disc brake 16 for braking of drive wheels 6.

Drive wheels 6 run on two spaced apart rails 17 which are resiliently mounted to guideway 2. Drive wheels 6 engaging rails 17 on upper faces 18 of the respective rail heads. Bogie 7 is also equipped with two grip wheels 19 which are movably engagable with respective lower faces 20 of the heads of rails 17.

Referring to Figure 4, each grip wheel 19 is rotatably mounted to one end of an actuating lever 21 which is pivotally connected to projection 22 of support member 8 at pivot 23 and having its other free end pivotally connected to the piston rod of a pneumatic cylinder 24. Actuation of pneumatic cylinder 24 which is pivotally connected to support member 8 causes pivotal movement of the actuating lever 21 about pivot joint 23, thereby causing engagement and disengagement of the grip wheel 19 with the lower face 20 of rail 17. Also when grip wheel 19 is engaged with lower face 20 the force of engagement can be varied by varying the pressure in pneumatic cylinder 24.

During travel of vehicle 1 along the guideway 2, this arrangement allows for grip wheels 19 to be urged against lower faces 20 of rails 17 when drive wheels 6 are about to lose or have momentarily lost adhesion with upper faces 18.

In order to respond to the imminent loss or actual loss of adhesion of drive wheels 6 each vehicle 1 and guideway 2 are provided with various sensing means for controlling actuation of grip wheels 19. Preferably,

pneumatic cylinders 24 would be connected to a control unit (not shown) on each vehicle 1, which would continuously read and collate the parameters being sensed by the various sensing means and thereby variably control actuation of grip wheels 19 against lower faces 20 of rails 17.

For instance, sensing means (not shown) could be incorporated in the means operating disc brake 16 to sense the braking or torque being applied to drive wheels 6, and therefore allow grip wheels 19 to be variably urged against lower faces 20 of rails 17 during braking or propulsion of vehicle 1.

A further sensing means would preferably be employed to sense incline or grade on various sections of the track. Sensor bars 26, one of which is shown in Figure 3, run parallel to rails 17 on segments of guideway 2 which are steeply inclined. A sensing unit 25 mounted on bogie 7 of each vehicle 1 is adapted to sense the presence of a sensor bar 26, and the control unit (not shown) can therefore actuate grip wheels 19 to urge against lower faces 20 of rails 17 whilst the sensor bar 26 is being passed over. The sensor bars 26 would be present on guideway 2 wherever a steep incline was present, including ramps 4 at each end of the boarding area 3.

In order to sense slippage of wheels 6, a further sensing means (not shown) could be employed which compares the vehicles speed with the rotation of wheels 6. By continuously comparing these parameters wheel slippage can be sensed and grip wheels 19 actuated as necessary. Furthermore the grip wheels 19 can be positioned clear of the lower faces 20 of rails 17, as shown in Figure 3, under most operating conditions, and only engaged when conditions require additional adhesion thereby reducing wear on the mechanism and possible vibration or noise.

In a second embodiment the present invention is shown in Figures 5 to 9 in which a vehicle adapted for traversing elevated guideways incorporates a self-steering bogie as disclosed in my International application PCT/AU94/00046.

Referring to Figures 5 to 7, a vehicle 31 has two preferably identical bogies 32, one of which is shown. Bogie 32 is driven by electric motor 33, mounted on the underside of floor structure 34 of vehicle 31 and drives through drive shaft 35 and universal joints 36 and 37 the differential gearing of principal axle assembly 38 in a manner to be described.

Principal axle assembly 38 is pivoted by spherical joint 39 to suspension member 40 which is hinged to the underside of floor structure 34 about axis X. Thus bogie 32 is restrained from lateral movement with respect to the upper portion of the vehicle but can move vertically, pivot or roll with respect thereto.

Principal axle assembly 38, which is symmetrical about axis Y, comprises housing 41 which extends laterally to provide journals for shafts 42 on which are mounted flanged drive wheels 43. Shafts 42 incorporate bevel gear 44 driven by bevel gears 45 mounted on shaft 46 extending from each side of differential assembly 47. The shaft carrying universal joint 37 is journalled in housing 41 and carries the pinion of the well-known crown wheel and pinion arrangement as universally used in automotive vehicles.

Mounted on housing 41 by brackets (not shown) is tubular 48 which extends beyond drive wheels 43 to provide swivel mountings for the lower end of pneumatic support struts 50 which are also provided with swivel mountings 51 to the underside of floor structure 34. Pneumatic support struts 50 thus provide a means of carrying the vertical load of vehicle 31 to the wheels 43 whilst allowing the principal

axle assembly 38 to swivel, move vertically and roll with respect to the upper portion of the vehicle.

Drive wheels 43 are here shown riding on rails 52 in a dihedral fashion as described in my International application No PCT/AU94/00046.

Referring to the enlarged view Figure 8, it will be seen that the head 53 of rail 52 is laterally displaced with respect to web 54 and which is inclined to the horizontal at about the same angle α as the rim of wheel 43. Web 54 is also inclined to better accept the direction of wheel load. The lower face 55 is not parallel to the upper face 56 but inclined thereto at an angle θ to provide working clearance for the face of grip wheel 57 which otherwise might strike the rail support in the region indicated by 58. Whilst two grip wheels operate, one on each rail 52 for ease of description the operation of one grip wheel 57 will further be detailed.

Referring now to Figures 5 and 9, grip wheel 57 freely rotates on axis W of spindle 59 which itself is pivoted about axis R in a housing 68. Spindle 59 is mounted on the lower end of lever 60 which is pivotally connected by clevis 61 to pneumatic cylinder 62 so as to cause grip wheel 57 to be forced into contact with the lower face 55 of rail head 53 so increasing the vertical pressure between wheel 43 and rail 52.

Referring back to Figure 5, which shows the front view of the vehicle 31 including of the electric drive motor 33 and principal axle assembly 38 together with a section through guideway support beam 63. It will be appreciated from this view that because of the width of the track, that without the presence of grip wheels 57, the stability of the vehicle might be inadequate.

Figures 5 to 7 illustrate the provision to steer the principal axle assembly 38 in a manner similar to that described in my International application No PCT/AU94/00046. A forked tubular structure 64, see Figure 6 is supported by upper ball joint 65 and lower ball joint (not shown). The ball joint studs comprise a spherical head having a tapered extension and threaded end as is well known in automotive suspension practice. The centres of spherical heads lie along pivot axis S, and the tapered extensions of the ball joint studs are firmly secured in lugs extending from housing 41. The ball sockets are contained within forked tubular structure 64 which extends rearwardly to support two axles which journal two freely rotating steering wheels 67, only one of which is shown in Figure 5.

As previously mentioned, whilst this arrangement allows for self-steering characteristics mentioned, the grip wheels 57 are utilised to ensure adhesion of the drive wheels 43.

Referring to Figure 6, it will be seen that pneumatic support struts 50 are positioned longitudinally somewhat behind the principal axle assembly 38 (or centre of drive wheels 43) at a distance about 1/5th of the distance between the principal wheels and steering wheels 67. Thus the weight of the vehicle tends to keep the steering wheels 67 in sufficiently intimate contact with rails 52 to perform their steering task. Because spherical ball joint 39 is located longitudinally in the same plane as the axes of drive wheels 43, side forces acting on the vehicle apply no unwanted steering forces to the principal axle assembly 38 so that the required steering forces are small.

The grip wheels 57 are located longitudinally near the same plane of pneumatic support struts 50, so that an increased vertical force resulting from the engagement of

grip wheels 57 is applied to both drive wheels 43 and also to a lesser extent to steering wheels 67 when pneumatic cylinders 62 are actuated thus inhibiting any tendency of steering wheels 67 to be lifted from the rails 52 during braking.

The operation of pneumatic cylinders 62 are controlled by air valves connected to a compressed air storage tank and pump (not shown) on the vehicle 31. They may be operated at selected positions along the guideway where extra braking or adhesion is required to avoid slippage as detailed in the first embodiment, by using sensing means to determine loss or imminent loss of adhesion on the drive wheel 43.

Routine braking may be accomplished by regenerative braking of electric motor 33 or by using disc brakes (not shown) as in the first embodiment.

In both of the abovementioned embodiments the grip wheels are substantially made from steel and comprise a central steel hub with a steel outer lining mounted thereon with a synthetic resilient material, such as a polymer material, therebetween. However, in other not shown preferred embodiments the grip wheels may be made of a single suitable material or combination of suitable materials.

Further, whilst in both of the abovementioned embodiments the grip wheels are actuated by pneumatic cylinders pivotally linked to the grip wheels via actuating levers, it may be that in further not shown embodiments the actuation mechanism for the grip wheels comprises some other suitable actuating means, such as a hydraulic or electromechanical system.

In both of the abovementioned embodiments the grip wheels are used to ensure adhesion of drive wheels. However, in further not shown embodiments the grip wheels could be

used to ensure the adhesion of non-drive wheels. For instance, the grip wheels could be used on vehicles which have non drive wheels and are propelled by linear induction systems.

The control units for controlling actuation of the grip wheels of the abovementioned embodiments and further not shown embodiments may be adapted to actuate grip wheels on a single vehicle simultaneously or individually. Further, the control unit may form part of a larger control unit which controls various parameters of the vehicle and may be adapted to transmit and receive signals from a larger control system which monitors the whole guideway system.

In further not shown embodiments, vehicles in accordance with the present invention could run on rails or tracks which have a different form from those described above. For instance, the track section may comprise of a concrete slab with opposed embedded running members on either side of the slab providing upper and lower running faces which the wheels and grip wheels of the vehicle respectively engage. The term track means covers such different forms of track and rail sections.

In accordance with the present invention the use of grip wheels to ensure adhesion of wheels may be used to achieve increased speeds and braking effectiveness of vehicles as well as reduce the safe intervals between vehicles being run on the system.

The present invention is also suitable for use on material handling and other conveyance systems which utilise vehicles on guideway systems.

The embodiments of the invention as described above are given by way of example only as constituting preferred forms of the invention defined broadly in the various aspects.

It will be appreciated by persons skilled in the art that numerous variations and/or modifications may be made to the invention as shown in the specific embodiments without departing from the spirit or scope of the invention as broadly described.

Claims:-

1. A track means and a vehicle to operate thereon, the track means comprising two laterally spaced apart sets of running faces each of which having an upper running face and a lower running face, the vehicle having at least one axle assembly with at least a first set of two wheels journalled thereon and engaged with said respective upper running faces and a second set of two wheels journalled thereon and adapted to engage with the respective lower running faces, characterised in that the second set of wheels are forced into running engagement with the respective lower running faces by at least one actuating mechanism which varies the force of engagement by means of a sensed signal indicating loss of adhesion or imminent loss of adhesion of the first set of wheels with respect to the upper running faces.

2. A track means and a vehicle as claimed in claim 1, characterised in that the actuating mechanism is adapted for movement of the second set of wheels between an engaged position with the respective lower running faces and unengaged position where the second set of wheels are not in contact with the lower running faces.

3. A track means and a vehicle as claimed in claims 1 or 2, characterised in that the sensed signal indicating loss of adhesion or imminent loss of adhesion of the first set of wheels is a measure of one or more of track means incline, track condition, loading of the vehicle or brake pressure or torque applied to the first set of wheels.

4. A track means and a vehicle as claimed in any one of claims 1 to 3, characterised in that the track means comprises two spaced apart rails each having one of the sets of running faces.

5. A track means and a vehicle as claimed in any one of claims 1 to 4, characterised in that the first set of two wheels are driven wheels.

6. A track means and a vehicle to operate thereon, the track means comprising two laterally spaced apart sets of running faces each of which having an upper running face and a lower running face, the vehicle having at least one self steering bogie symmetrical about a centreline plane having a principal axle assembly with opposed flanged principal wheels whose axes are inclined to each other and the centreline plane and engaged with said upper running faces, a pair of freely rotating steering wheels also having axes inclined to each other and the centreline plane and engaged with said upper running faces, said steering wheels being supported from the principal axle assembly by a support structure about an axis lying on the centreline plane and inclined to the horizontal such that the steering wheels are longitudinally spaced apart from the principal wheels, and a pair of grip wheels supported from the principal assembly and engaged with said respective lower running faces, characterised in that the grip wheels are forced into running engagement with the respective lower running faces by at least one actuating mechanism which varies the force of engagement by means of a sensed signal indicating loss of adhesion or imminent loss of adhesion of the principal wheels with respect to the upper running faces.

7. A track means and a vehicle as claimed in claim 6, characterised in that said grip wheels are longitudinally positioned between said principal wheels and said steering wheels near said principal wheels.

8. A track means and a vehicle to operate thereon, the track means comprising two laterally spaced apart sets of running faces each of which having an upper running face and

a lower running face, the vehicle having at least one self steering bogie symmetrical about a centreline plane having a principal axle assembly with opposed flanged principal wheels whose axes are inclined to each other and the centreline plane and engaged with said upper running faces, a pair of freely rotating steering wheels also having axes inclined to each other and the centreline plane and engaged with said upper running faces, said steering wheels being supported from the principal axle assembly by a support structure about an axis lying on the centreline plane and inclined to the horizontal such that the steering wheels are longitudinally spaced apart from the principal wheels, and a pair of grip wheels supported from the principal assembly and engageable with said respective lower running faces.

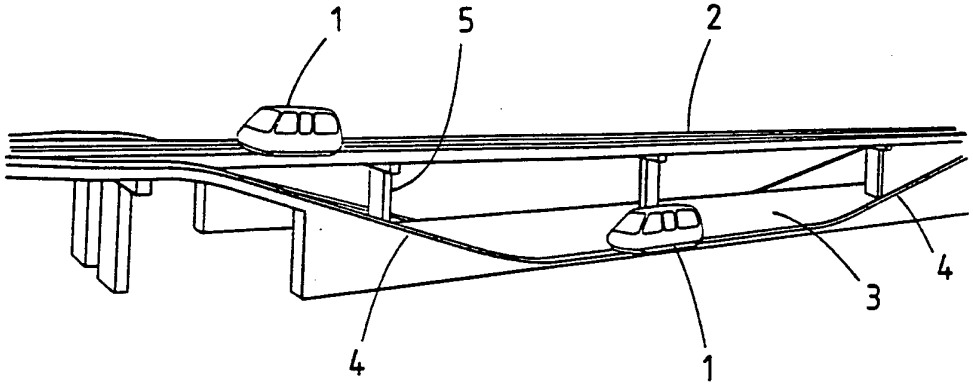

Fig 1

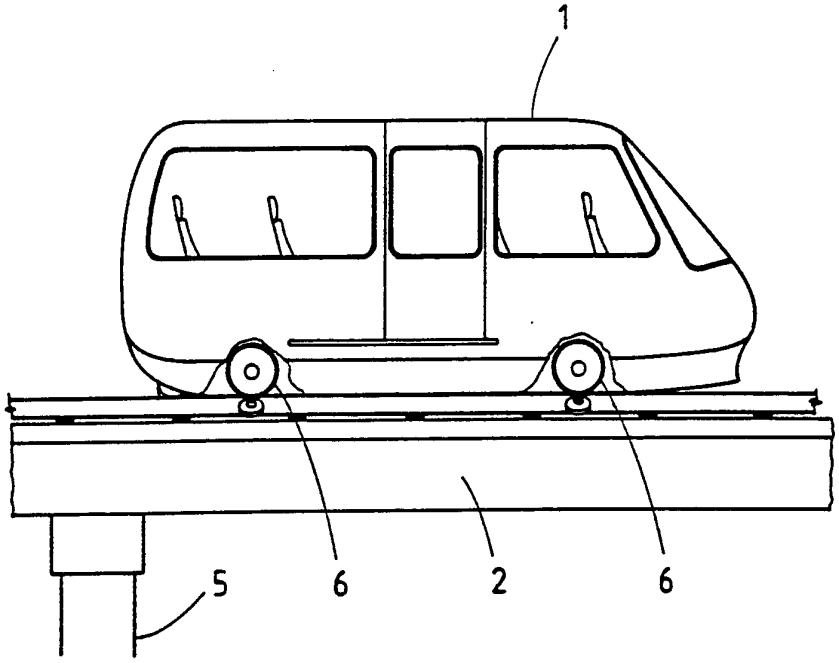

Fig 2

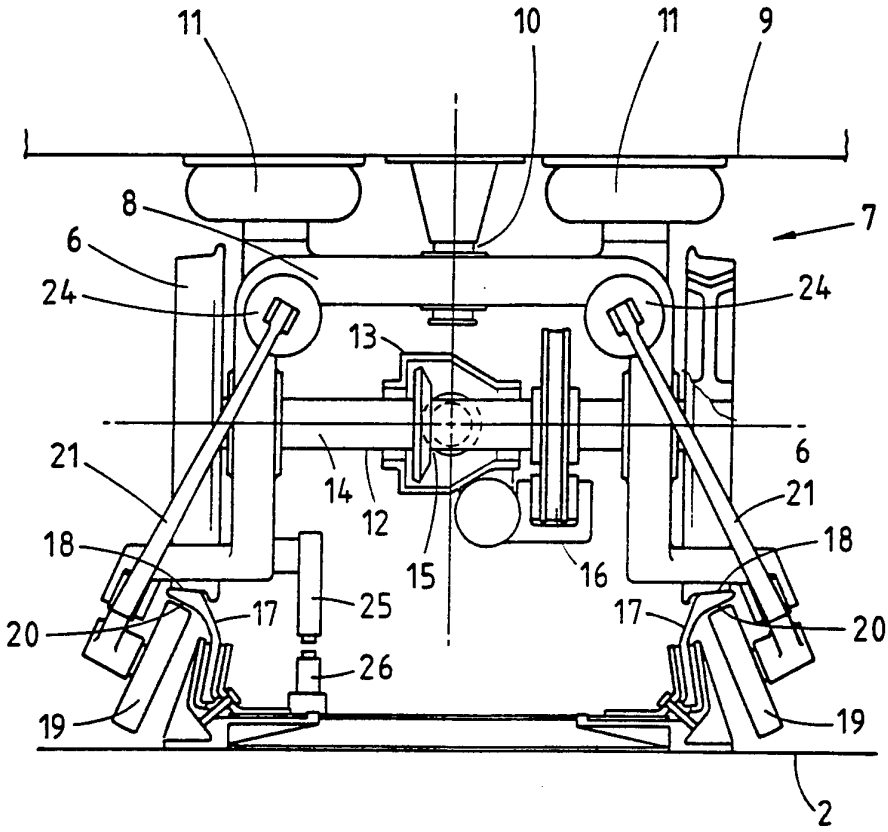
11
10
11
9
8
7
6
24
24
13
6
21
14
12
21
18
15
16
18
17
25
17
20
20
26
19
19
2

Fig 3

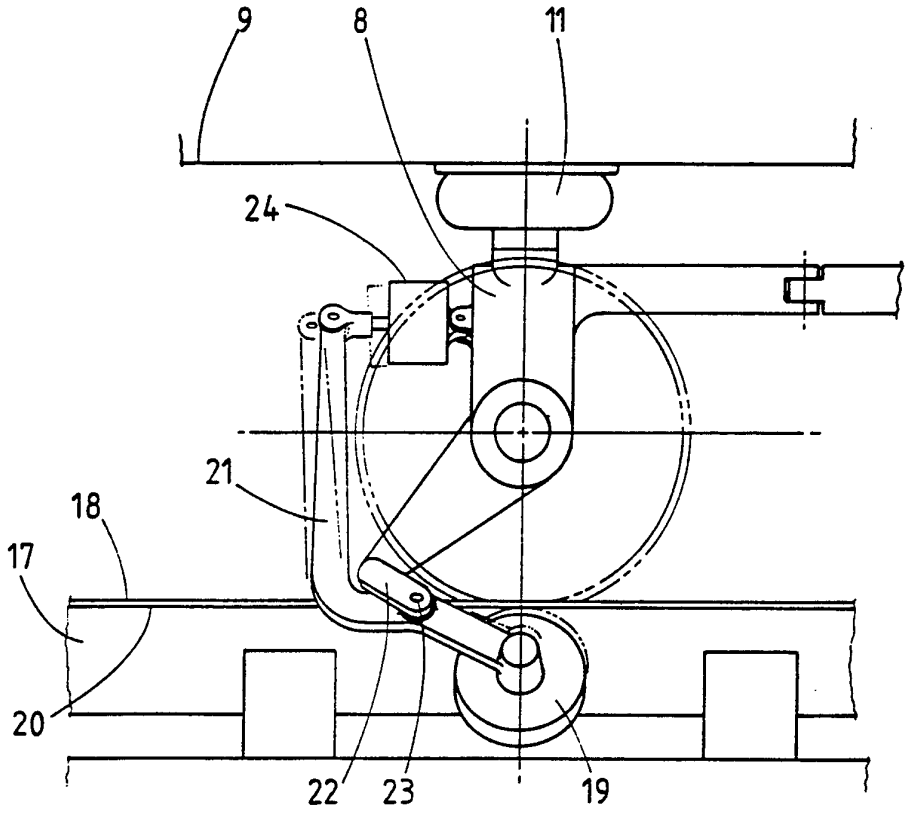

Fig 4

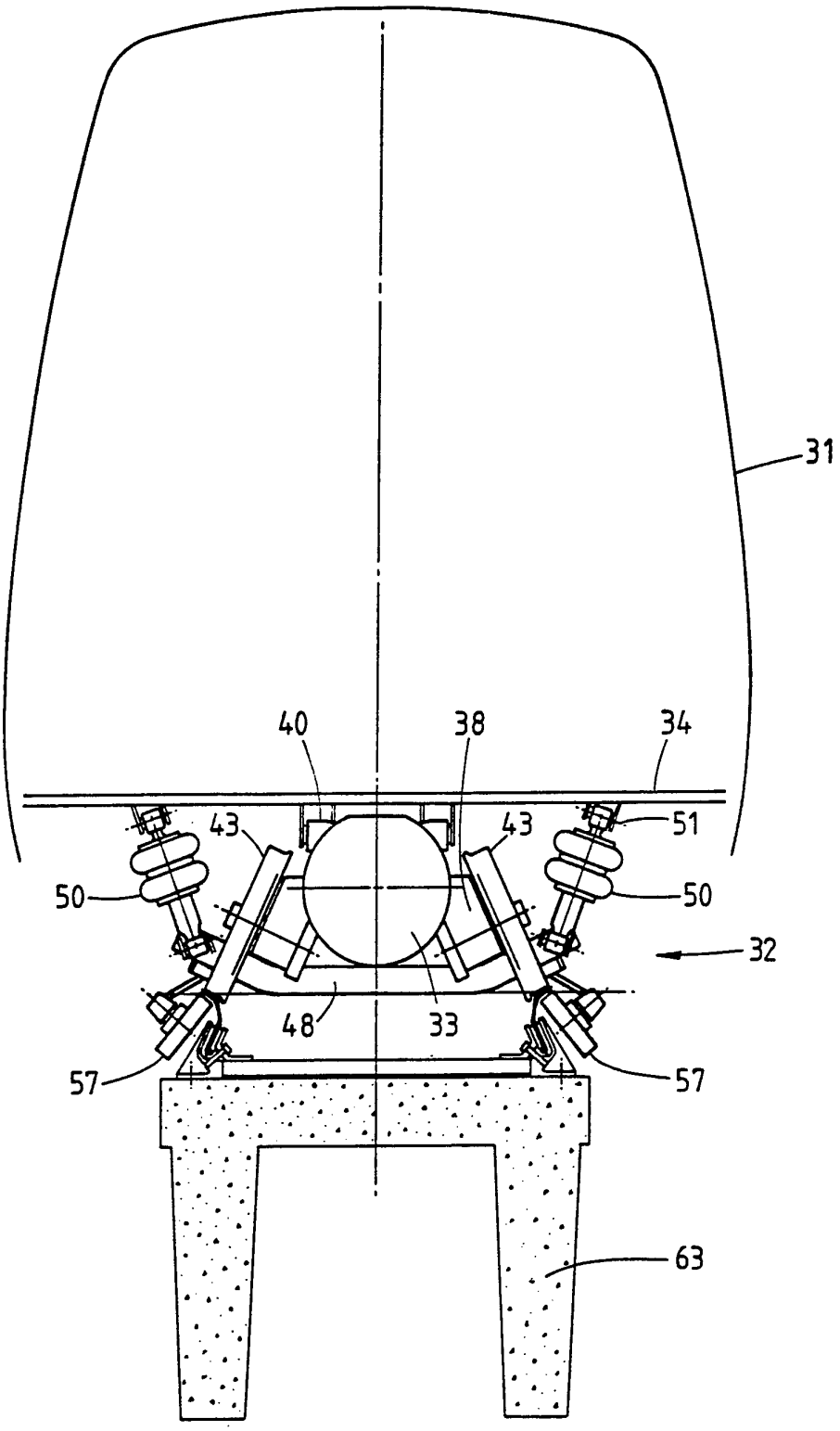

Fig 5

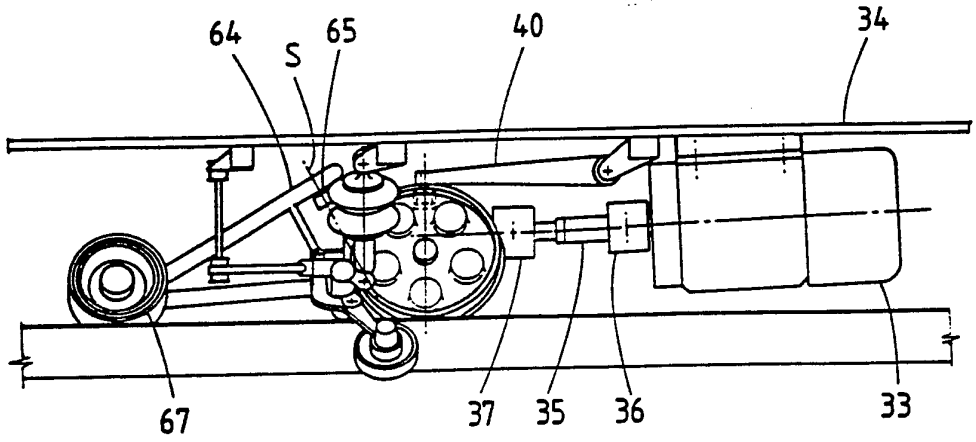
64
S
65
40
34
67
37
35
36
33

Fig 6

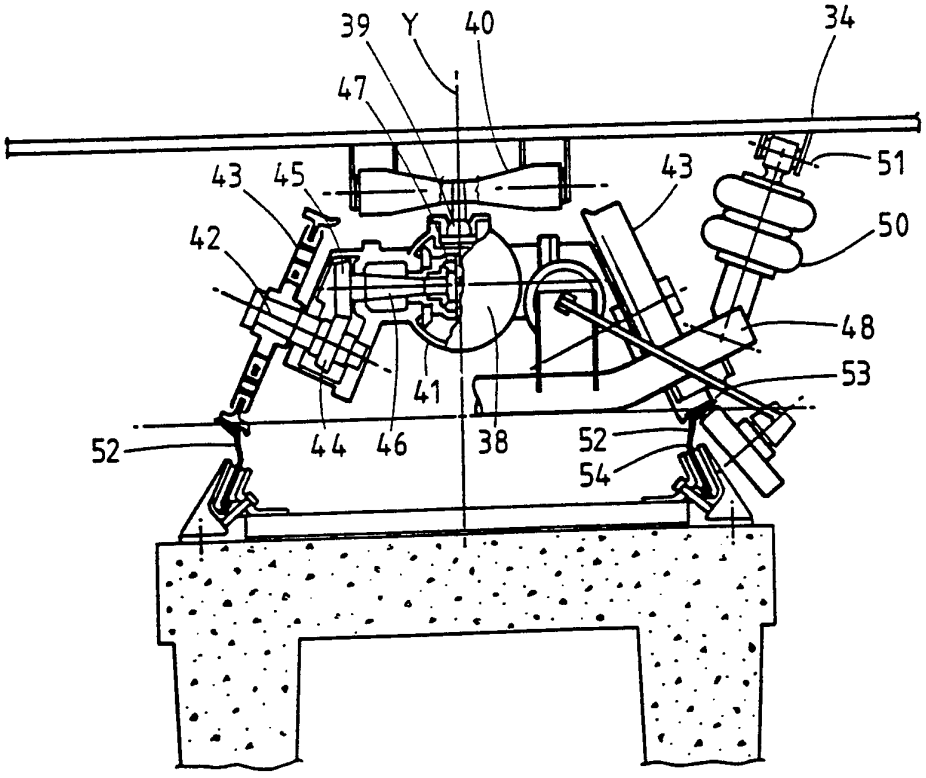
39
Y
40
34
47
43
45
43
51
42
50
48
53
41
52
44
46
38
52
54

Fig 7

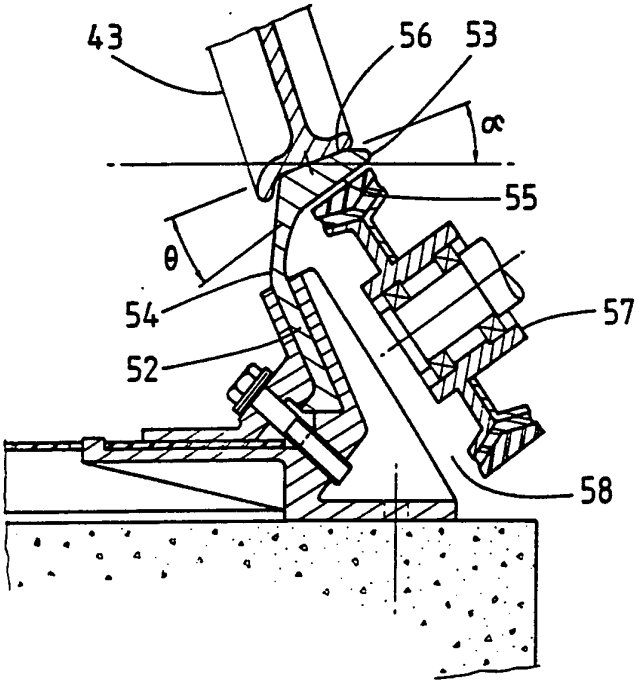

Fig 8

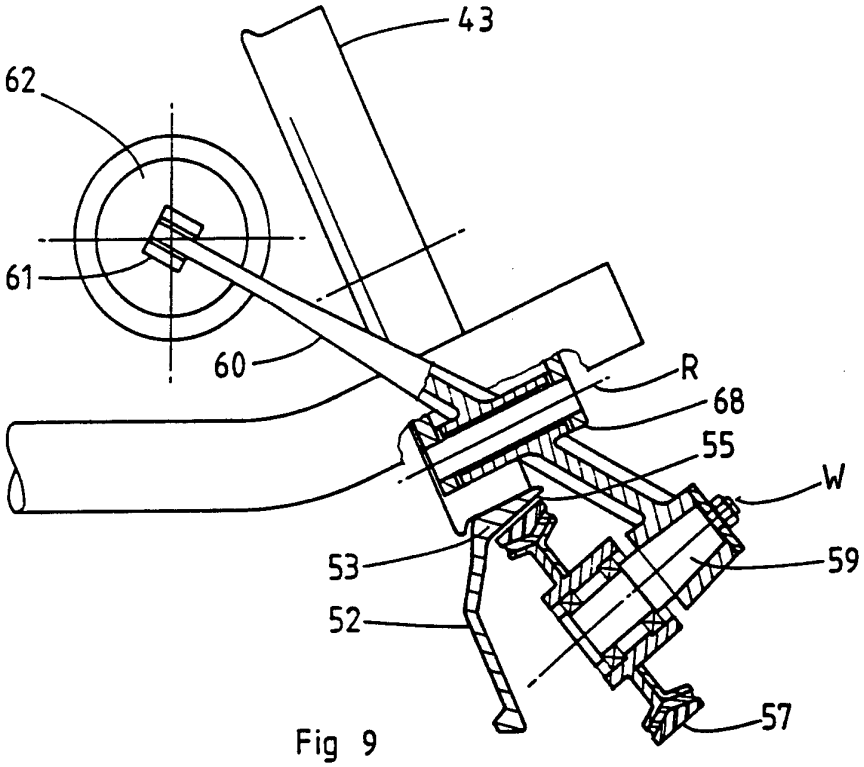

Fig 9

INTERNATIONAL SEARCH REPORT

International application No.
PCT/AU 94/00201

A. CLASSIFICATION OF SUBJECT MATTER

Int. Cl.[5] B61B 5/02, B61C 11/00, 13/04, 15/08

According to International Patent Classification (IPC) or to both national classification and IPC

B. FIELDS SEARCHED

Minimum documentation searched (classification system followed by classification symbols)
IPC B61B 5/02, B61C 11/00, 13/04, 15/08

Documentation searched other than minimum documentation to the extent that such documents are included in the fields searched
AU : IPC as above

Electronic data base consulted during the international search (name of data base, and where practicable, search terms used)
DERWENT

C. DOCUMENTS CONSIDERED TO BE RELEVANT

Category*	Citation of document, with indication, where appropriate, of the relevant passages	Relevant to Claim No.
X	US,A, 2018087 (PLASS) 22 October 1935 (22.10.35) page 1, line 49 - page 2, line 42 and drawings	1-4
Y		5
Y	US,A, 4023503 (GROP) 17 May 1977 (17.05.77) abstract; column 2, lines 51-68 and drawings	1, 2, 4
Y	EP,A, 488475 (FATA AUTOMATION S.p.A.) 3 June 1992 (03.06.92) abstract; column 4, lines 4-23 and drawings	1, 3

[X] Further documents are listed in the continuation of Box C.

[X] See patent family annex.

* Special categories of cited documents :

"A" document defining the general state of the art which is not considered to be of particular relevance

"E" earlier document but published on or after the international filing date

"L" document which may throw doubts on priority claim(s) or which is cited to establish the publication date of another citation or other special reason (as specified)

"O" document referring to an oral disclosure, use, exhibition or other means

"P" document published prior to the international filing date but later than the priority date claimed

"T" later document published after the international filing date or priority date and not in conflict with the application but cited to understand the principle or theory underlying the invention

"X" document of particular relevance; the claimed invention cannot be considered novel or cannot be considered to involve an inventive step when the document is taken alone

"Y" document of particular relevance; the claimed invention cannot be considered to involve an inventive step when the document is combined with one or more other such documents, such combination being obvious to a person skilled in the art

"&" document member of the same patent family

Date of the actual completion of the international search	Date of mailing of the international search report
22 July 1994 (22.07.94)	4 August 1994 (04.08.94)
Name and mailing address of the ISA/AU AUSTRALIAN INDUSTRIAL PROPERTY ORGANISATION PO BOX 200 WODEN ACT 2606 AUSTRALIA Facsimile No. 06 2853929	Authorized officer C.M. WYATT Telephone No. (06) 2832538

INTERNATIONAL SEARCH REPORT

International application No.
PCT/AU 94/00201

Category*	Citation of document, with indication, where appropriate of the relevant passages	Relevant to Claim No.
Y	EP,A, 520591 (MANNESMANN AKTIENGESELLSCHAFT) 30 December 1992 (30.12.92) abstract and drawings	1, 3
A	US,A, 4044688 (KITA) 30 August 1977 (30.08.77) column 3, line 41 - column 4, line 16; column 4, line 64 - column 5, line 13; abstract and drawings.	1
P,Y	EP,A, 582348 (FATA AUTOMATION S.p.A.) 9 February 1994 (09.02.94) abstract; column 3, line 47 - column 4, line 19 and drawings	1
Y	AU,A, 70109/87 (TSUBAKIMOTO CHAIN CO.) 15 September 1988 (15.09.88) page 8, lines 20-32 and drawings	1
A	GB,A, 2001921 (RUHRKOHLE AKTIENGESELLSCHAFT) 14 February 1979 (14.02.79) abstract; page 3, lines 99-109 and drawings	1
Y	EP,A, 132934 (CIMARRON TECHNOLOGY LTD) 13 February 1985 (13.02.85) abstract; page 17, lines 20-28 and drawings	1
Y	DE,A, 650162 (MULLER) 16 September 1937 (16.09.37) page 1, line 55 - page 2, line 15 and drawings	1-5

Box I **Observations where certain claims were found unsearchable (Continuation of Item 1 of first sheet)**

This international search report has not established in respect of certain claims under Article 17(2)(a) for the following reasons:

1. ☐ Claims Nos.:
because they relate to subject matter not required to be searched by this Authority, namely:

2. ☐ Claim Nos.:
because they relate to parts of the international application that do not comply with the prescribed requirements to such an extent that no meaningful international search can be carried out, specifically:

3. ☐ Claims Nos.:
because they are dependent claims and are not drafted in accordance with the second and third sentences of Rule 6.4(a).

Box II **Observations where unity of invention is lacking (Continuation of item 2 of first sheet)**

This International Searching Authority found multiple inventions in this international application, as follows:

Independent claims 1, 6 and 8 characterise the invention by features not so linked as to form a single general inventive concept. Whilst all three claims define a track and vehicle combination which includes a set of grip wheels, claim 8 characterises the combination by a self steering bogie with flanged wheels whose axes are inclined to each other and with a set of freely rotating steering wheels, etc.

Claims 1 and 6, on the other hand, characterise the combination by an actuating mechanism which varies the force of engagement between the "second set of wheels" or the "grip wheels" and the track in response to a signal indicating loss or imminent loss of adhesion between the main traction wheels of the vehicle and the track. The said features characterising the combination as defined in claim 1 are not included in the combination of claim 8 and, similarly, the said features characterising the combination defined in claim 8 are not included in claim 1, thus leaving the features in common without an inventive concept.

Claim 6, on the other hand, incorporates substantially all the features present in claims 1 and 8 and can be said to incorporate both inventions.

1. ☐ As all required additional search fees were timely paid by the applicant, this international search report covers all searchable claims

2. ☒ As all searchable claims could be searched without effort justifying an additional fee, this Authority did not invite payment of any additional fee.

3. ☐ As only some of the required additional search fees were timely paid by the applicant, this international search report covers only those claims for which fees were paid, specifically

claims Nos.:

4. ☐ No required additional search fees were timely paid by the applicant. Consequently, this international search report is restricted to the invention first mentioned in the claims; it is covered by claims Nos.:

Remark on Protest

☐ The additional search fees were accompanied by the applicant's protest.

☐ No protest accompanied the payment of additional search fees.

This Annex lists the known "A" publication level patent family members relating to the patent documents cited in the above-mentioned international search report. The Australian Patent Office is in no way liable for these particulars which are merely given for the purpose of information.

Patent Document Cited in Search Report		Patent Family Member					
JP	520591	DE	4121516	US	5241911		
US	4044688	AY	87714/75	CA	1036423	JP	52002910
US	4023503	DE JP	2544072 51062086	FI NO	752758 753322	GB SE	1518294 7412450
GB	2001921	DE	2728020	FR	2395175	DE	2826218
EP	132934	AU US	30474/84 4862807	CA US	1293960 4862809	JP	60092152

END OF ANNEX