United States Patent [19]

Wiczer

[11] 3,834,198

[45]* Sept. 10, 1974

[54] **LOCK ANTI-PICK DEVICE**

[76] Inventor: **Max Wiczer,** 9122 Kedvale, Skokie, Ill. 60076

[*] Notice: The portion of the term of this patent subsequent to Oct. 16, 1990, has been disclaimed.

[22] Filed: **Feb. 21, 1973**

[21] Appl. No.: **334,394**

Related U.S. Application Data

[63] Continuation-in-part of Ser. No. 294,385, Oct. 2, 1972, Pat. No. 3,765,199.

[52] **U.S. Cl.** **70/208,** 70/156, 70/181, 70/408, 70/423, 292/169

[51] **Int. Cl.** **E05b 13/08,** E05b 5/04

[58] **Field of Search** 70/156, 208, 273, 406, 70/416, 419, 455; 292/37, 140, 169

[56] **References Cited**

UNITED STATES PATENTS

483,298	9/1892	Bruns	70/107
2,189,227	2/1940	Schoch	292/1
3,630,053	12/1971	Krakauer	70/421

Primary Examiner—Albert G. Craig, Jr.
Attorney, Agent, or Firm—Fitch, Even, Tabin & Luedeka

[57] **ABSTRACT**

An anti-pick device for a lock is described which includes means for disabling the lock, and means including a key slot for operating the disabling means. A housing is mounted over the key slot entrance and a key holder is mounted slidably in the housing for movement along the path aligned with the key slot. A recess is provided in the key holder extending transversely of the path of movement of the key holder for receiving the key and supporting the key in alignment with the key slot.

8 Claims, 3 Drawing Figures

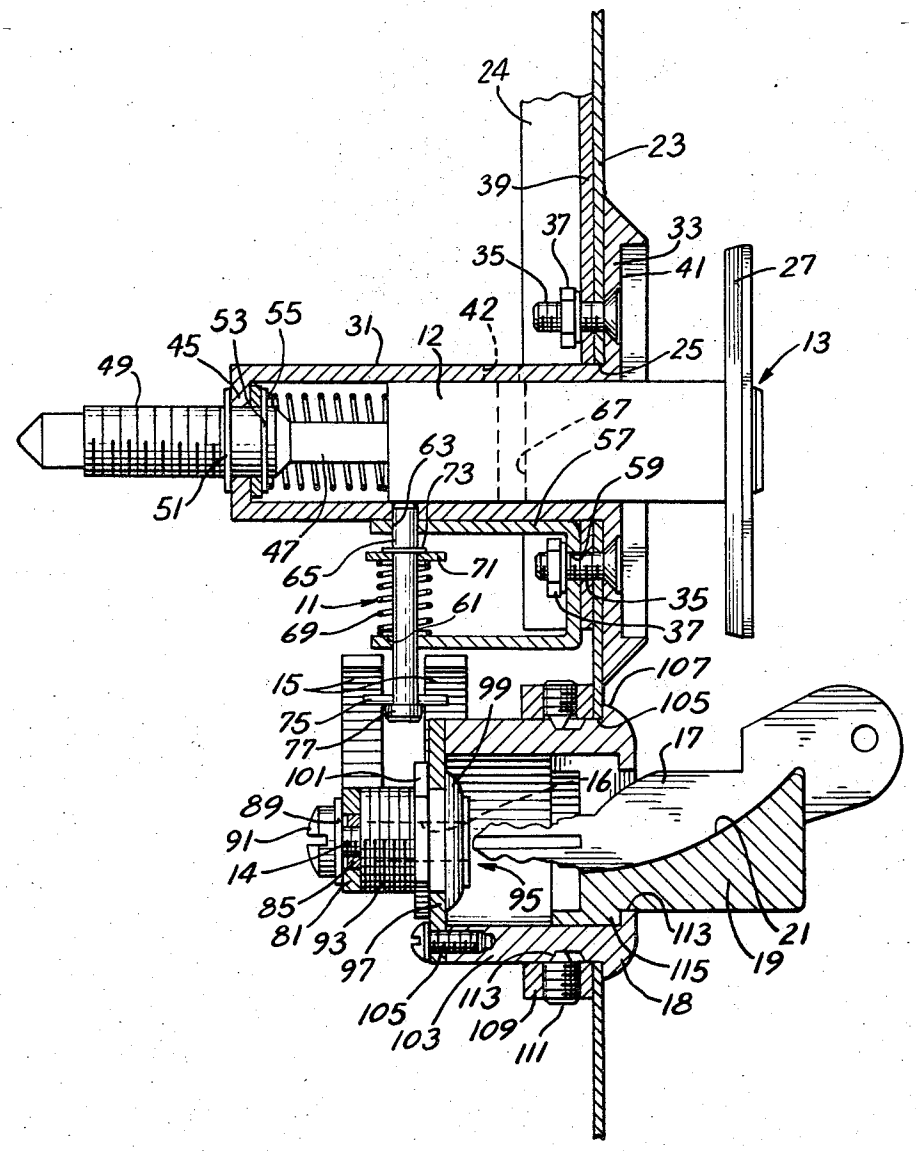

FIG. 1

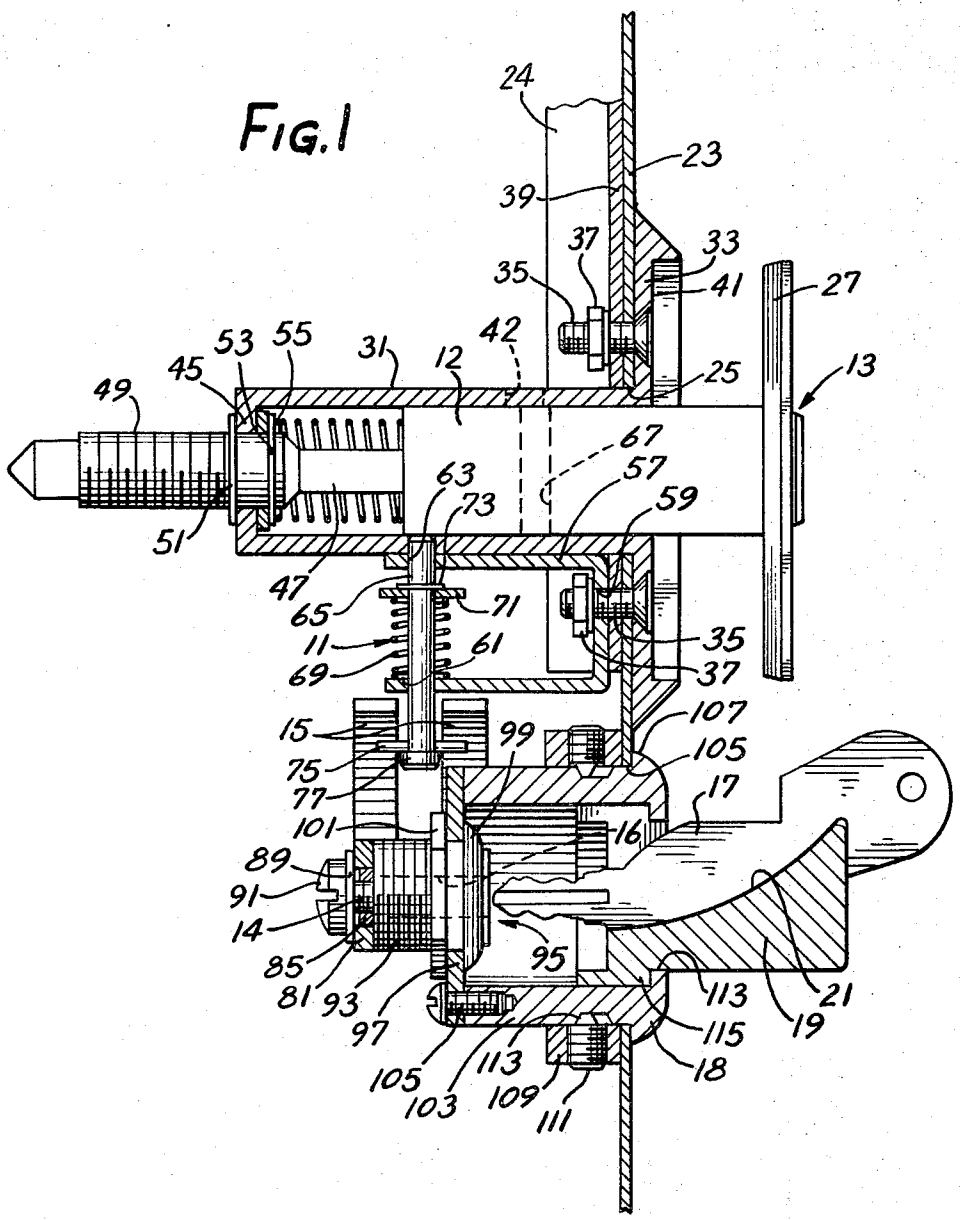
24
23
39
37
33
35
41
27
42
53
55
31
12
45
25
13
49
67
63
57
73
59
51
47
65
71
11
61
35
69
37
107
15
99
105
75
17
77
101
16
89
91
14
95
85
113
21
81
93
97
115
19
105
113
18
103
109
111

FIG. 2

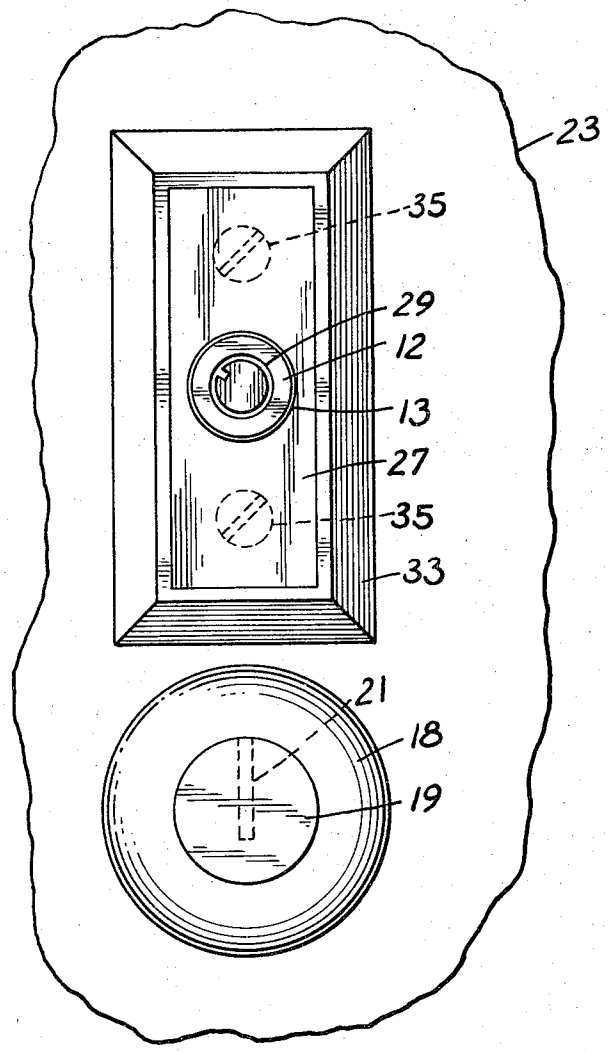

FIG. 3

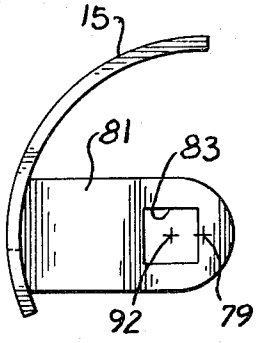

LOCK ANTI-PICK DEVICE

This application is a continuation-in-part application of copending application Ser. No. 294,385 filed Oct. 2, 1972, now U.S. Pat. No. 3,765,199 dated Oct. 16, 1973.

This invention relates generally to locking devices and, more particularly, to an anti-pick device for a lock having a movable element.

Various techniques have been devised by nefarious individuals within society for opening locking devices without the necessity of employing a key. Such techniques include picking, drilling, punching, and pulling the cylinder out of the lock.

In order to frustrate the activities of such persons employing the aforementioned techniques, a number of prior art devices have been devised. Typically, these devices have not afforded as thorough protection against illegal tampering as might be desired. Moreover, such prior art devices have often been difficult to install, expensive to construct, and have some times required extensive modification of the lock itself.

In the aforementioned copending patent application, an anti-pick device for a lock is described which prevents a direct line of sight access to the key slot and therefore provides a means for protection for the lock against picking, drilling, punching, and cylinder pulling. The device described in the aforementioned patent application is adapted for installation over the key slot entrance to an existing lock.

For certain types of locks, the device described in the aforementioned patent application may not be suitable. For example, in locks of the so called T-Handle type in which, upon opening of the lock, a handle springs outwardly from a recess to enable turning and opening of a latch, the locking device as described in the aforementioned patent application may interfere with the operation of the handle.

It is an object of the present invention to provide an improved anti-pick device for a lock.

Another object of the invention is to provide an anti-pick device for a lock which is readily installed, inexpensive to construct, and does not require major modification of the lock itself.

It is another object of the invention to adapt the anti-pick device of the previously set forth patent application for use with locks which are unsuited to installation of the device directly over the key slot of the lock.

Various other objects of the invention in addition to those set forth above will become apparent to those skilled in the art from the following description, taken in connection with the accompanying drawings, wherein:

FIG. 1 is a full cross sectional view of the device of the invention, shown installed with a lock in a panel;

FIG. 2 is a front elevational view of the apparatus shown in FIG. 1; and

FIG. 3 is a rear elevational view of a portion of the apparatus of FIG. 1.

Very generally, the anti-pick device of the invention comprises disabling means **11** for engaging and disengaging a movable element **12** of a lock **13** for preventing and enabling movement of the movable element. A rotary member **14** is provided, and means **15** are provided for operating the disabling means in response to rotation of the rotary member. A key slot **16** in the rotary member is adapted for receiving a key **17** for rotating the rotary member. A housing **18** is mounted about the entrance to the key slot, and a key holder **19** is mounted slidably in relation to the housing for linear movement along a path aligned with the key slot. The key holder has a recess **21** therein for receiving the key and supporting the key in alignment with the key slot. The recess extends transversely of the path of movement of the key holder.

Referring now more particularly to the drawings, the invention is shown employed in connection with a T-Handle lock assembly with an "Ace" lock of the type manufactured by the Chicago Lock Company, Chicago, Ill. The anti-pick device of the invention is adapted for mounting to a panel **23** in which the lock is already mounted in order to provide protection for the existing lock against tampering. The device of the invention may be so mounted without substantial modification of the lock or the panel, as will be described. The panel **23** may be, for example, the door to a vending machine cabinet **24.**

The lock illustrated in the drawings includes a movable element or body **12** which projects through an opening **25** in the panel **23** and which has a handle **27** mounted thereon. The body **12** contains the lock mechanism internally thereof, and the lock mechanism, which is not illustrated, is operated by the insertion of a key, not shown, in an annular slot **29.** The body is supported in a bracket **31** which is mounted by means of a flange **33** to the panel **23** by bolts **35** and nuts **37.** A shim plate **39** is placed behind the panel for additional rigidity. The flange **33** is provided with a recess **41** and the body **12** is movable axially within the bracket **31** so as to enable the handle **27** to be recessed within the recess **41** when the lock is in a locked condition. To hold the body with the handle in the recessed condition, a pin, not shown, mounted internally of the lock body, enters a hole **42** in the bracket **31.** Operation of the lock mechanism by the key withdraws the pin from the hole.

A spring **43** is mounted between the inner end of the body **12** and an inwardly projecting annular wall **45** on the inner end of the bracket **31.** The spring **43** biases the body **12** axially outward and therefore biases the handle **27** into the position illustrated. In this position, an internal keyway not shown couples the handle **27** to a lock shaft **47** in order to enable the shaft **47** to be rotated when the handle **27** is turned. The shaft **47** is connected to drive a threaded shaft **49,** the latter being mounted for rotation within the annular flange **45** of the bracket **31** by means of washers **51, 53,** and **55.** Suitable mechanisms, such as a latch, not illustrated, are mounted on the threaded shaft **49** for operation by the handle **27.**

When the lock **13** is in the locked condition, the handle and hence the body **12** of the lock are moved inwardly against the bias of the spring **43.** The pin, not shown, internally of the body **12,** holds the lock in the locked condition with the handle **27** recessed into the recess **41.** In this way, the handle cannot be turned until the lock is once more opened by insertion of a key in the key slot **29.**

It will be apparent that the key slot **29** is readily accessible when the lock **13** is in the locked condition. Accordingly, tampering with the lock could cause release of the internal latching mechanisms within the lock body **12** and enable the lock to be placed in the

illustrated condition and the latch mechanism to be operated. In order to prevent this, the device of the invention is employed.

In accordance with the invention, a U-shaped bracket **57** is mounted to the inside of the panel adjacent the lock bracket **31.** The bottom of the U-shaped bracket **57** is provided with an opening **59** through which the lower one of the screws **35** passes. The sides of the U-shaped bracket **57** are provided with a pair of aligned openings **61** and **63** through which a pin **65** is adapted to slidably pass. The lock **13** is altered by means of providing a simple hole, recess, or other detent **67** in the lock body **12** such that the recess **67** is in alignment with the holes **63** and **61** when the lock **13** is in the locked condition. This enables the pin **65** to be passed into the recess. With the pin **65** in the recess, the lock **13** is disabled in that the handle **27** may neither be withdrawn nor rotated to operate the latch.

The pin **65,** which forms part of the disabling means **11,** is biased toward the movable element or body **12** of the lock **13** by means of a suitable spring **69.** The spring **69** is contained between one side of the U-shaped bracket **57** and a washer **71.** The washer is held in place by a suitable spring clip **73** secured in an annular groove in the pin **65.** The washer **71** provides a stop for the axial movement of the pin **65** by engaging the inner side of the U-shaped bracket **57** when the pin aligns with the recess **67** in the body **12** of the lock **13.**

In order to retract the disabling pin **65** from the recess **67** and enable the lock **13** to be operated, the pin **65** is provided with a washer **75** on the end thereof away from the lock body **12.** A shoulder **77** on the pin **65** retains the washer **75** on the pin. A pair of curved prongs **15** are provided for operating the disabling pin **65.** As may be seen in FIG. **3,** the prongs are mounted on the end of a bracket **81.** The bracket **81** is provided with a square hole **83** therein which is slipped over a nut **85** screwed onto the threaded portion of a rotary member **14.** The bracket is retained on the nut **85** by a washer **89** and bolt **91.** The axis of rotation of the prongs is about the axis **92** of the rotary member **14,** but the axis of curvature **79** of the prongs is offset to provide eccentric action.

The rotary member **14** is contained within the body **93** of a second lock **95.** The second lock **95** is provided with an anti-pick device in accordance with that shown, described, and claimed in the aforementioned copending application, and the aforementioned copending application is incorporated herein by reference.

The body **93** of the lock **95** is secured to an annular disc **97** by means of a flange **99** and a nut **101.** A key slot **16** is provided in the rotary member **14** in which a key **17** may be inserted for rotating the rotary member **14** in the lock body **93.** The disc **97** is secured to a housing **103** by means of screws **105.**

The housing **103** is supported in an opening **105** in the front panel **23** at a flange **107.** A mounting collar **109** surrounds the housing **103** on the inner side of the panel **23** and is secured to the housing by set screws **111** which enter an annular recess **113** in the housing. Thus, the panel **23** is clamped between the flange **107** and the collar **109** to support the housing **103** in the opening **105.**

The housing **103** contains an internally projecting flange **113** in which or through which a key holder **19** is slidably supported. The key holder **19** is provided with an internal enlarged portion **115** which is contained within the housing **103** behind the flange **113,** thus preventing removal of the key holder **19** from the flange. The key holder **19** is provided with a key slot **21** therein which is narrow and which has an opening extending transversely of the direction of movement of the key holder **19.** A key **17** fits within the key slot **21** and the key holder **19** is then pushed inwardly to cause the key **17** to enter the key slot **16** for operating the lock **95.**

Because the lock **13** is disabled by means located solely behind the panel **23,** and because access to the lock **95** is obtained only through the narrow key slot **21,** preventing direct line of access to the key slot **16,** the invention provides a high degree of protection against tampering. Protection is provided against picking, drilling, punching, cylinder pulling, and many other types of nefarious activities. The device of the invention is relatively simple of construction, is easily installed, and represents a significant improvement over the known prior art. The device of the invention is readily installed in an existing panel having a lock already mounted therein to provide protection without substantial modification of the existing lock.

Various modifications of the invention in addition to those shown and described herein will become apparent to those skilled in the art from the foregoing description and accompanying drawings. Such modifications are intended to fall within the scope of the appended claims.

What is claimed is:

1. An anti-pick device for a lock having a movable element, comprising, disabling means for engaging and disengaging the movable element of the lock for preventing and enabling movement of the movable element, a rotary member, means for operating said disabling means in response to rotation of said rotary member, a key slot in said rotary member for receiving a key for rotating said rotary member, a housing for mounting about the entrance to said key slot, said housing having an opening therein aligned with the key slot, and a key holder mounted slidably in relation to said housing for movement along a path aligned with the key slot, said key holder generally filling said opening in said housing, and means for preventing withdrawal of said key holder from said housing, said key holder having a recess therein for receiving a key and supporting same in alignment with the key slot, said recess extending transversely of the path of movement of said key holder and extending axially to open in alignment with the key slot only within said housing.

2. A device according to claim **1** wherein said disabling means comprise a lock pin movable axially into and out of a receiving opening in the movable element.

3. A device according to claim **2** wherein said disabling means include a spring biasing said lock pin toward the movable element.

4. A device according to claim **1** wherein said operating means comprise a cam movable in response to rotation of said rotary member.

5. A device according to claim **4** wherein said cam comprises a pair of prongs curved about an axis which is parallel with and offset from the axis of rotation of said rotary member and which are mounted for rotation about the axis of said rotary member to provide an eccentric action.

6. A device according to claim 5 wherein said disabling means comprise a lock pin movable axially into and out of a receiving opening in the movable element, and wherein said lock pin includes means thereon for engaging said prongs.

7. A device according to claim 6 including a spring biasing said lock pin toward the movable element.

8. An anti-pick device for a lock having a movable element, comprising, a lock pin movable axially into and out of a receiving opening in the movable element, a spring biasing said lock pin toward the movable element, a cam in engagement with said lock pin, a rotary member for moving said cam to move said lock pin against the bias of said spring, a key slot in said rotary member for receiving a key for rotating said rotary member, a housing mounted about the entrance to said key slot, said housing having an opening therein aligned with the key slot, and a key holder mounted slidably in relation to said housing for movement along a path aligned with said key slot, said key holder generally filling said opening in said housing, and means for preventing withdrawal of said key holder from said housing, said key holder having a recess therein for receiving a key and supporting same in alignment with said key slot, said recess extending transversely of the path of movement of said key holder and extending axially to open in alignment with the key slot only within said housing.

* * * * *