E. J. CONILL.

ROTARY EXPLOSION ENGINE.

APPLICATION FILED FEB. 5, 1909.

947,480. Patented Jan. 25, 1910.

3 SHEETS—SHEET 1.

FIG_1_

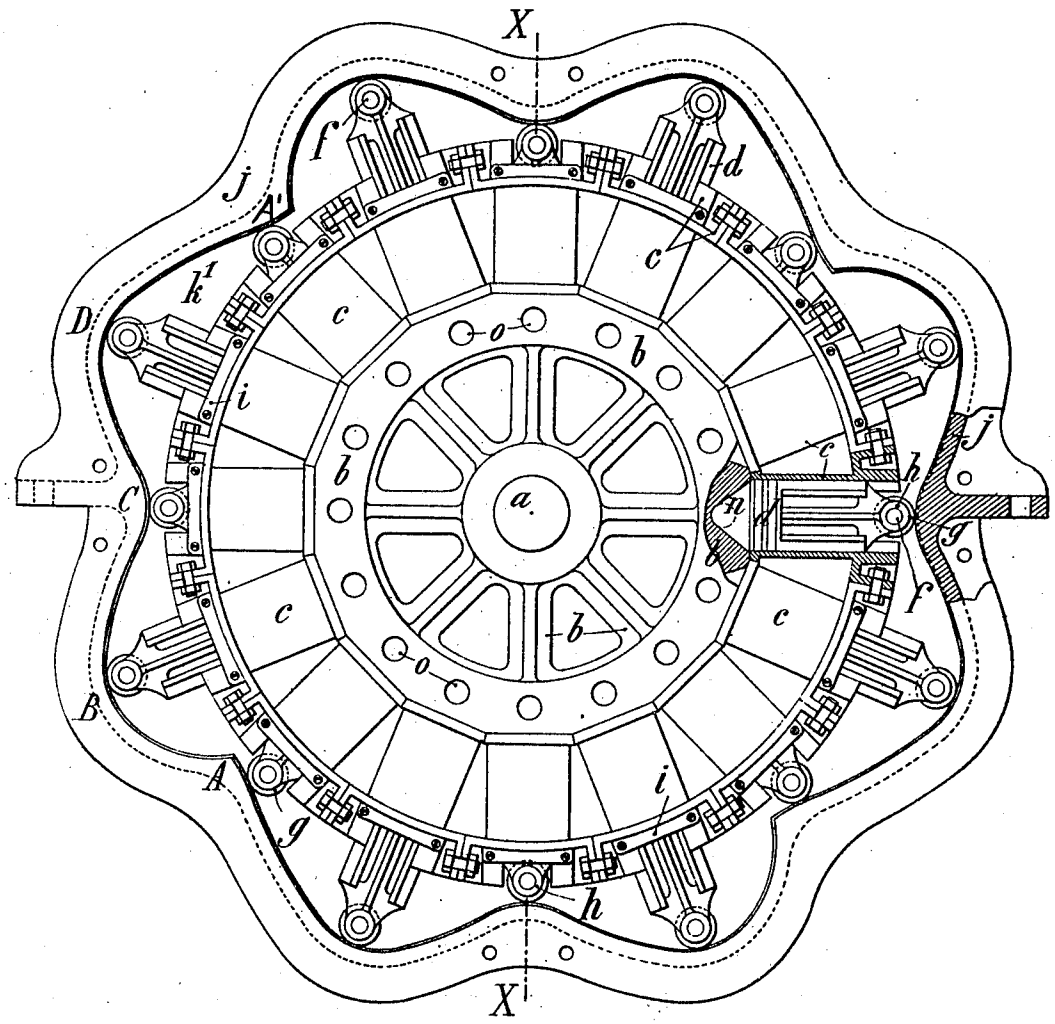

WITNESSES

W. P. Burke

Wm. G. Smith

INVENTOR

Enrique Juan Conill

BY W. M. William White

ATTY.

E. J. CONILL.

ROTARY EXPLOSION ENGINE.

APPLICATION FILED FEB. 5, 1909.

947,480. Patented Jan. 25, 1910.

3 SHEETS—SHEET 2.

FIG_2_

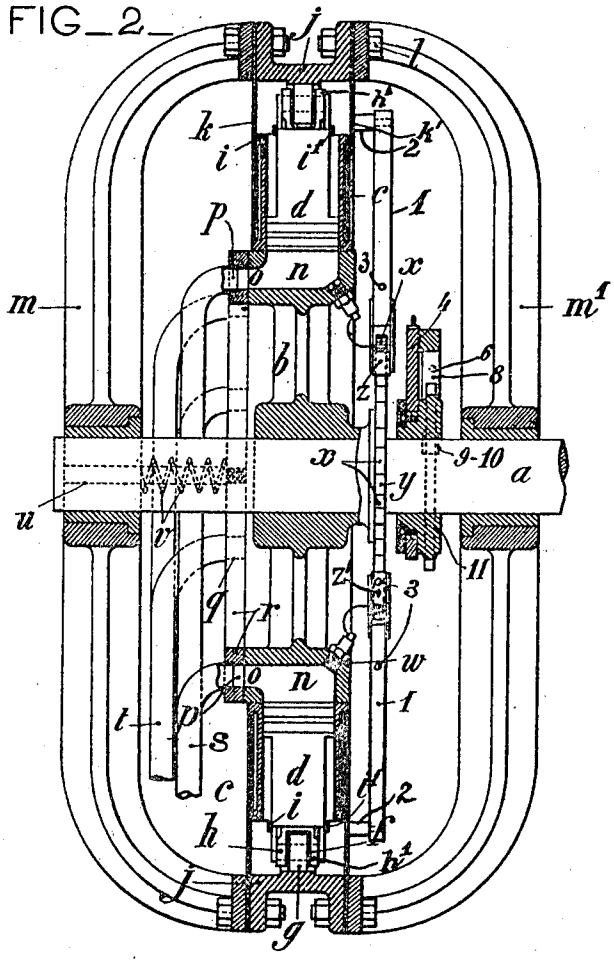

FIG_3_

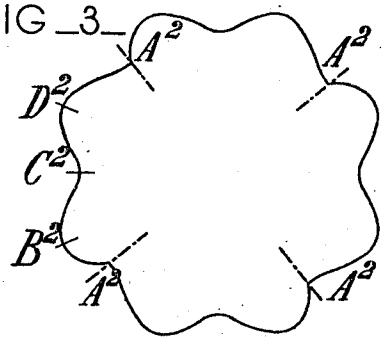

WITNESSES

W. P. Burke

Wm. G. Smith

INVENTOR

Emigdio Juan Conill

by Wm. Wallace Kerr

Atty

E. J. CONILL.

ROTARY EXPLOSION ENGINE.

APPLICATION FILED FEB. 5, 1909.

947,480. Patented Jan. 25, 1910.

3 SHEETS—SHEET 3.

FIG 4

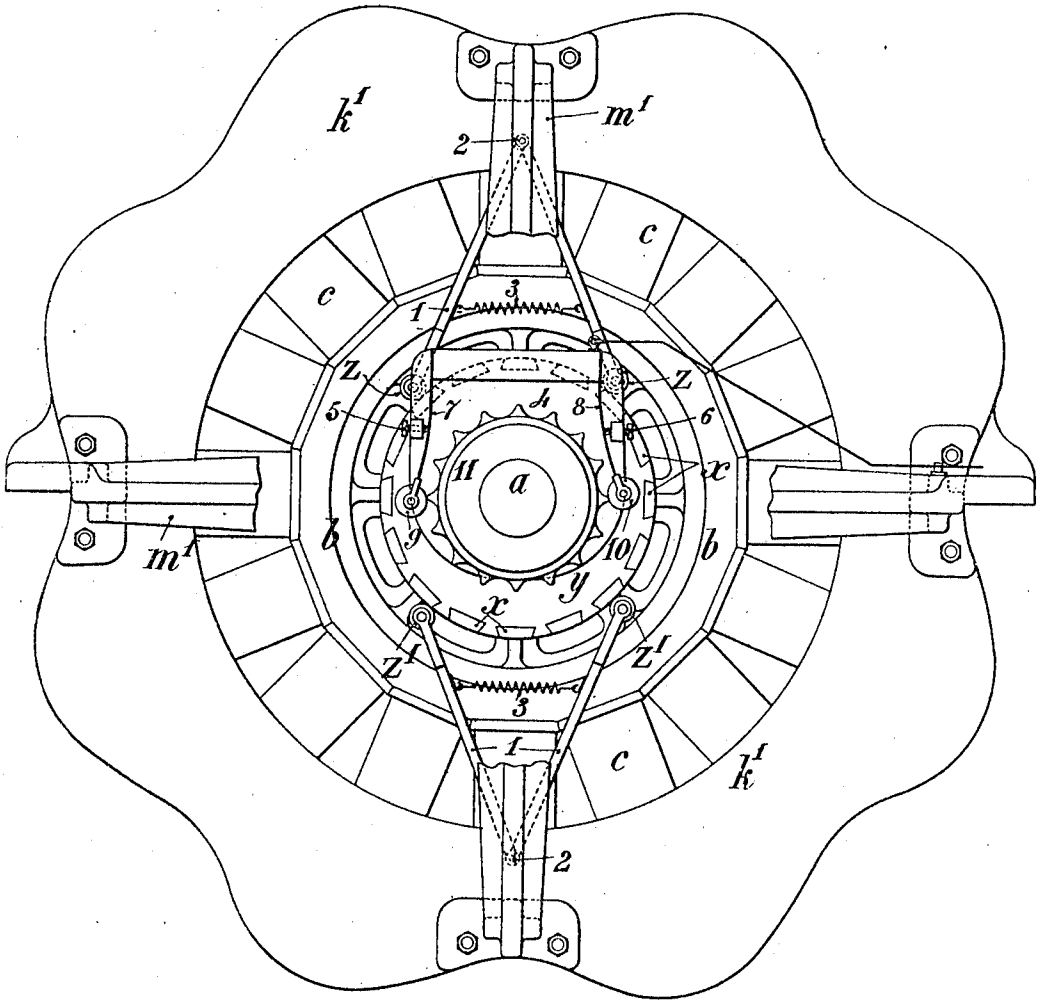

WITNESSES

W. P. Burns

R. R. Christy Jr.

INVENTOR

Enrique Juan Conill

BY

Ballard & Ballard

ATTY.

UNITED STATES PATENT OFFICE.

ENRIQUE JUAN CONILL, OF PARIS, FRANCE.

ROTARY EXPLOSION-ENGINE.

947,480. Specification of Letters Patent. Patented Jan. 25, 1910.

Application filed February 5, 1909. Serial No. 476,291.

To all whom it may concern:

Be it known that I, ENRIQUE JUAN CONILL, citizen of Cuba, residing at Hotel Astoria, Avenue des Champs Elysées, Paris, in the Republic of France, have invented new and useful Improvements in Rotary Explosion-Engines, of which the following is a specification.

This invention relates to an explosion engine of the kind in which radial cylinders are supported on the main shaft and are caused to rotate about said shaft through the reaction exerted by a fixed roller path on the piston rods of the cylinders.

According to the invention, there are sixteen motor cylinders and a special roller path is employed characterized by the fact that curves are formed so as to present eight equidistant points near to the axis of rotation and eight equidistant points farther away from said axis, the difference between the distance of the farthest points to the axis and the distance of the nearest points to the axis being equal to the stroke of the pistons.

In the accompanying drawings, Figure 1 is a sectional elevation view of the engine, Fig. 2 is a cross section on line X X of Fig. 1, and Fig. 3 is a diagrammatic view of the roller path. Fig. 4 is a view taken at right angles to the plane of Fig. 2.

The main shaft *a* has keyed to it a polygonal part or drum *b* with sixteen faces on each of which is fixed by means of bolts a cylinder *c*. Each of these cylinders has cast integral therewith a segment of an annulus, all these segments, fixed together by means of bolts constituting a complete annulus.

Each piston *d* carries a roller *g* loosely mounted on a stud *f* supported by two ears *h h'* solid with the piston.

The rollers *g* are adapted to roll against a roller path *j* formed of steel cast in one piece and having a U cross section. This roller path can be fixed to any suitable frame. The rolling band on which bear the rollers of the pistons is slightly projecting. The form of the roller path is determined in such manner as to give the best output; to this end the parts of the roller path corresponding to the compression are formed by gently sloping curves, so as to give a slow and progressive compression, and the parts corresponding to the expansion are formed by rapidly sloping curves so as to give a very active expansion.

The casing is closed at the sides by two pieces of sheet-metal *k k'* which have central apertures for allowing the rotation and cooling of the cylinders. These metal-sheets are secured by small bolts *l* to the rolling way *j*.

The shaft *a* is carried by two bearing supports *m m'* with four arms fixed to the rolling way *j* by means of bolts.

To each cylinder corresponds in the part *b* a chamber *n* extended by a conduit *o* leading to the side of the distribution. During the rotation of the engine, the ports *o* pass successively in front of corresponding ports *p*, *q*, of the distributing plate *r*. The fresh gases are supplied to the admission ports *p* by pipes *s* and the burned gases escape through pipes *t* leading to the exhaust ports *q*. The distributing plate *r* has two threaded stems *u* which slide in two corresponding holes of the bearing support *m*. These stems *u* hold the plate in place and prevent it from revolving. Spiral springs *v* mounted on the stems *u* and bearing on the support *m* force the distribution plate to bear energetically on the rotating part *b*.

Into each chamber *n* corresponding to a cylinder projects the end of a sparking plug *w* connected to a bronze contact *x* fixed to the periphery of a circular ebonite plate *y* keyed to the shaft; the sixteen bronze contacts *x* pass successively, during the rotation in front of two pairs of small bronze rollers *z z'* mounted at the end of ebonite stems 1 articulated on pivots 2 carried by the casing; the rollers *z z'* are caused to bear against the plate *y* by means of a spring 3 and are electrically connected to one of the poles of a suitable source of electric current such as a high tension magneto electric machine.

In front of the plate *y* is mounted loosely on the main shaft another ebonite plate 4 on which are attached two terminals 5 and 6 connected to the second pole of the source of current. Two springs 7 and 8 fixed to the ebonite plate 4 carry two bronze rollers 9 and 10 against which bear the teeth of a pinion 11 keyed on the main shaft; these teeth by moving the springs apart through the medium of the rollers, put them in contact with the screws 5 and 6. The high tension current flows then from one pole of the source through the four rollers *z z'*, the four corresponding contacts *x*, the four corresponding sparking plugs, whereby an

igniting spark is simultaneously produced, in the four corresponding cylinders, the metallic body of the motor, the shaft *a*, the pinion 11, the rollers 9, 10, the springs 7, 8, the terminals 5, 6, and the second pole of the source. The spark ceases when the springs 7 and 8 leave the terminals 5 and 6. When the four contacts following those above referred to, come next under the four rollers *z z'*, a spark is simultaneously produced in the four following cylinders and so on, so that the sixteen cylinders are fired in every fourth of a revolution, four being fired at the same time.

To explain the operation of the engine, it is only necessary to study the operation of one cylinder. Suppose that the roller of a piston is at the point A of the roller path: at this point the explosion is produced in the corresponding cylinder and the piston is forced out violently. The curve of the roller path favors this violent projection by utilizing to the maximum the force produced for rotating the whole rotary part. The roller thus rolls up to B where the piston has come at the end of its stroke. The engine continuing to revolve on account of the speed acquired, the roller rolls up to C and forces the piston to return into the cylinder. During this time the port *o* of the cylinder passes in front of the port *q* of the distributing plate *r* and the exhaust of the burned gases is produced. From C to D the piston is no longer guided by the roller path: the centrifugal force alone causes it to bear on said path and to cause the suction owing to the passage of the port *o* in front of the admission port *p*. At D the compression commences and lasts until A' is reached. When the roller of the piston reaches the point A' the ignition roller touches the contact *x* corresponding to the sparking plug of the cylinder: the tooth pinion 11 in its rotation produces the spark, the explosion is produced in the cylinder and the operations previously described are repeated.

It will be understood by referring to the drawing that an explosion is produced simultaneously at four points A^2, that is to say in four cylinders at the same time, and four times per cylinder and per revolution. Between two successive points A^2 each cylinder accomplishes a complete cycle: from A^2 to B^2 useful work; from B^2 to C^2 exhaust; from C^2 to D^2 suction and from D^2 to A^2 compression and ignition. Each cylinder giving four explosions per revolution, there is thus for the sixteen cylinders, sixty-four explosions per revolution. The distributing plate has consequently four admission openings and four exhaust openings.

The operation of an engine constructed according to this invention is very regular; the dead points are avoided and on account of the continuity of the engine efforts, the respective dimensions of all the parts may be very much reduced, which gives a great lightness with a great regularity.

Having now described my invention, what I claim as new and desire to secure by Letters Patent is:

A rotary explosion engine comprising in combination a motor shaft, a polygonal drum with sixteen faces keyed on said motor shaft, a radiating cylinder secured respectively one on each face of the polygonal drum, a piston arranged in each cylinder, means for the admission of fresh gases into the cylinders, means for the exhaust of the burned gases, means for igniting the fresh gases in the cylinders, rollers carried by the outer ends of the piston rods and a stationary roller path on which are adapted to roll the said rollers and having a curved shape presenting eight equidistant points near to the axis of rotation and eight equidistant points farther away from said axis, the difference between the distance of the farthest points to the axis and the distance of the nearest points to the axis being equal to the stroke of the pistons, substantially as described and for the purpose set forth.

In testimony whereof I have signed my name to this specification in the presence of two subscribing witnesses.

ENRIQUE JUAN CONILL.

Witnesses:
LOUIS MOSÈS,
H. C. COXE.