No. 777,117. PATENTED DEC. 13, 1904.

F. LUDWIGSON.

THIMBLE ATTACHMENT.

APPLICATION FILED JUNE 2, 1904.

NO MODEL.

Fig. 1.

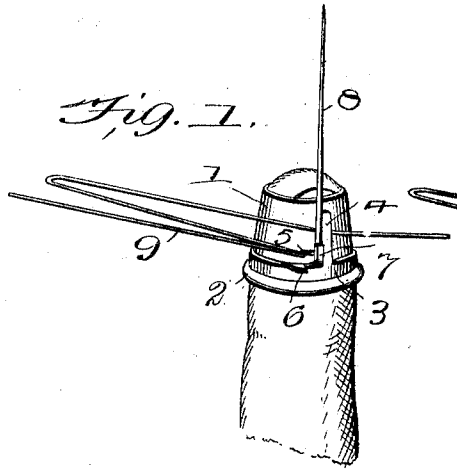

Fig. 2.

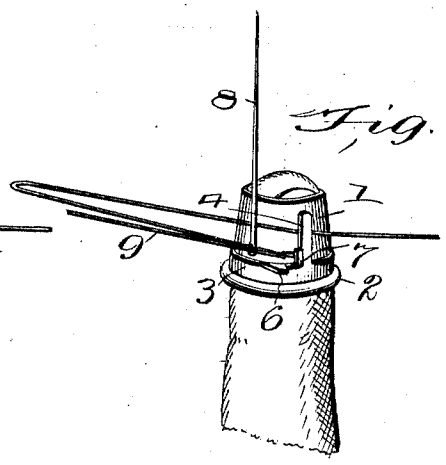

Fig. 3.

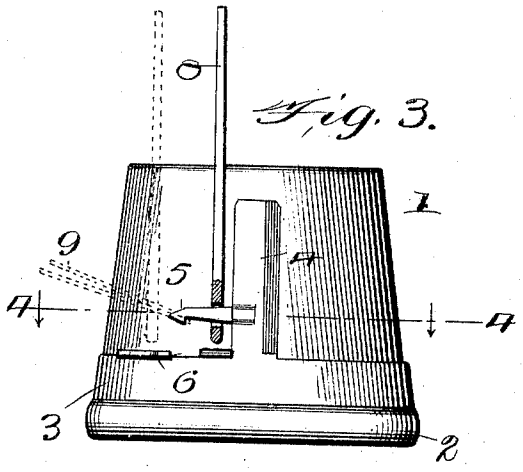

Fig. 4.

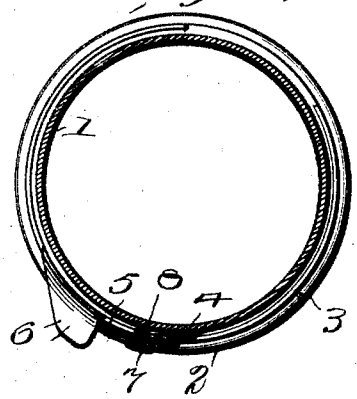

Fig. 5.

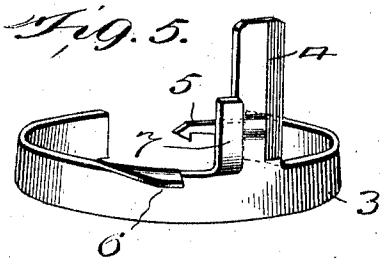

Witnesses

F. C. Barry.

G. Gould.

Inventor

F. Ludwigson.

By W. J. Fitzgerald & Co.

Attorneys.

No. 777,117. Patented December 13, 1904.

UNITED STATES PATENT OFFICE.

FERDINAND LUDWIGSON, OF PLEASANTGROVE, UTAH.

THIMBLE ATTACHMENT.

SPECIFICATION forming part of Letters Patent No. 777,117, dated December 13, 1904.

Application filed June 2, 1904. Serial No. 210,874. (No model.)

To all whom it may concern:

Be it known that I, FERDINAND LUDWIGSON, a citizen of the United States, residing at Pleasantgrove, in the county of Utah and State of Utah, have invented certain new and useful Improvements in Thimble Attachments; and I do hereby declare the following to be a full, clear, and exact description of the invention, such as will enable others skilled in the art to which it appertains to make and use the same.

My invention relates to an attachment for thimbles; and it consists of certain novel features of combination and construction of parts, the preferred form whereof will be hereinafter fully set forth, and pointed out in the claim.

The main object of my invention is to provide an attachment for thimbles which will be convenient and useful for a great variety of purposes, as for cutting a thread and for threading needles, suitable means being at the same time provided for protecting the fingers of the operator from all liability of injury from the use of said attachment.

Other objects and advantages will be hereinafter made fully apparent, reference being had to the accompanying drawings, which are considered a part of this application, and in which—

Figure 1 shows a perspective view of my invention ready to be applied to use. Fig. 2 is a similar view showing how the needle is threaded. Fig. 3 shows a side elevation of my needle-threading attachment, the head of the needle being shown in section. Fig. 4 is a sectional view of Fig. 3 on line 4 4. Fig. 5 is a detail perspective view of my attachment complete separated from a thimble.

For convenience of reference to the various details and coöperating accessories numerals will be employed, the same numeral applying to a similar part throughout the several views.

Referring to the numerals on the drawings, 1 indicates a thimble of the usual or any preferred construction, having at its enlarged end the usual flared edge or bead finish 2, and against said edge I dispose the body portion of my attachment, which latter is designated by the numeral 3 and consists of a band of suitable material of proper length to partly or completely encircle the thimble, upon which it may be secured either by its own tensile properties or by soldering, as may be deemed most desirable.

By reference to Fig. 5 and other views it will be observed that I have integrally formed from the band-like member or body portion 3 the extension 4, one edge of which is sharpened to serve as a cutting-blade, whereby a thread may be quickly severed as desired, it being understood that said knife extension 4 is to be disposed normally parallel with and in close engagement to a contiguous part of the thimble, as more clearly shown in Fig. 2. I attach to or integrally form with the knife member 4 the hook-like extension 5 of proper size to pass through the eye of a needle, whereby when said hook extension is passed through the needle's eye the hook thereon will engage the thread and draw the same through the needle's eye, and thus enable the needle to be quickly threaded.

In order that the sharpened end of the hook-like extension 5 may be housed and the fingers of the operator thereby shielded against contact with said point, I provide the outwardly-directed lip 6, which, as will be observed, is also an integral part of the band or body portion 3. In like manner I fashion the needle-holding finger 7, the same being an integral part of the body portion or attached to said body, as preferred, the office of said finger being to lie adjacent to the hook extension 5, whereby when the latter is passed through the eye of the needle the finger 7 will press against the needle and hold it in a vertical position, substantially as shown in Fig. 1, wherein the needle is designated by the numeral 8.

It will be observed by reference to the foregoing description, considered in connection with the accompanying drawings, that the body-section or band-like member 3 and all of the members 4, 5, 6, and 7 are fashioned from the same material, though, as above stated, said parts may be separately formed and properly attached to the band or body member 3, and I therefore reserve the right to manufacture the same in any way I may find most desirable and advantageous.

Inasmuch as the lip or guard extension 6 extends outward at right angles to the plane

of the hook extension 5 and that the finger 7 also partly covers said hook extension, it is obvious that the latter will be housed by said parts, and the fingers of the operator will therefore be prevented from casually engaging the sharpened point of said hook extension, and while said lip and finger thus serve as a guard and shield they will in no wise interfere with the efficiency of the hook extension, inasmuch as it will always be disposed out of the way of contact with the fingers of the operator and at the same time be prevented from taking into the garment or article operated upon.

If preferred, the band-like member 3 may be fashioned of such material as will give it the requisite degree of resiliency whereby it will tightly cling to the timble when once adjusted thereon, thus requiring no other means to hold it in place and permit it to be removed and placed upon another thimble, as desired.

While I have described the preferred combination and construction of parts deemed necessary in carrying out my invention, I desire to comprehend all substantial equivalents and substitutes which fairly fall within the scope of my invention.

Having thus fully described the construction of my invention, it is thought that the manner of using the same will be fully apparent, though it may be stated that when a needle is to be threaded it is first disposed in the position shown in Fig. 1—*i. e.*, the hook extension is caused to pass through the eye of the needle—whereby the thread, as indicated by the numeral 9, may be caused to engage the hook-terminal. The needle 8, which has been held in position upon the hook extension 5 by the finger 7, is moved off of said hook extension, the latter thereby drawing the thread through the eye of the needle, thus leaving the needle properly threaded after the shorter end of the thread has been drawn entirely through the eye.

What I claim as new, and desire to secure by Letters Patent, is—

The herein-described combined thread-cutter and needle-threader, comprising a body member 3 having the knife extension 4 adapted to be disposed parallel with the body of the thimble upon which the body member 3 has been clasped; a hook-like extension 5 carried by said knife extension; a finger 7 lying adjacent to the hook extension and designed to hold the needle upon said hook extension and a guard or shield 6 carried by the edge of said body member 3 designed to partly inclose the hook extension and prevent the latter from pricking the fingers or engaging the fabric operated upon, all combined substantially as specified and for the purpose set forth.

In testimony whereof I have signed my name to this specification in the presence of two subscribing witnesses.

FERD. LUDWIGSON.

Witnesses:
JAMES CHIPMAN, Jr.,
H. JOHNSON.