Office de la Propriété Intellectuelle du Canada
Un organisme d'Industrie Canada

Canadian Intellectual Property Office
An agency of Industry Canada

CA 2575946 C 2009/07/28

(11)(21) **2 575 946**

(12) **BREVET CANADIEN**
CANADIAN PATENT

(13) **C**

(86) Date de dépôt PCT/PCT Filing Date: 2005/03/01
(87) Date publication PCT/PCT Publication Date: 2006/03/09
(45) Date de délivrance/Issue Date: 2009/07/28
(85) Entrée phase nationale/National Entry: 2007/02/21
(86) N° demande PCT/PCT Application No.: CA 2005/000306
(87) N° publication PCT/PCT Publication No.: 2006/024131
(30) Priorité/Priority: 2004/08/31 (US60/605,719)

(51) Cl.Int./Int.Cl. *H04W 88/02* (2009.01), *H04B 1/10* (2006.01)

(72) Inventeurs/Inventors:
ZHU, LIZHONG, CA;
CORRIGAN, MICHAEL, CA;
JARMUSZEWSKI, PERRY, CA

(73) Propriétaire/Owner:
RESEARCH IN MOTION LIMITED, CA

(74) Agent: BORDEN LADNER GERVAIS LLP

(54) Titre : DISPOSITIF DE COMMUNICATIONS SANS FIL MOBILE A INTERFERENCE REDUITE DERIVEE DU CLAVIER DANS LE RECEPTEUR RADIO

(54) Title: MOBILE WIRELESS COMMUNICATIONS DEVICE WITH REDUCED INTERFERENCE FROM THE KEYBOARD INTO THE RADIO RECEIVER

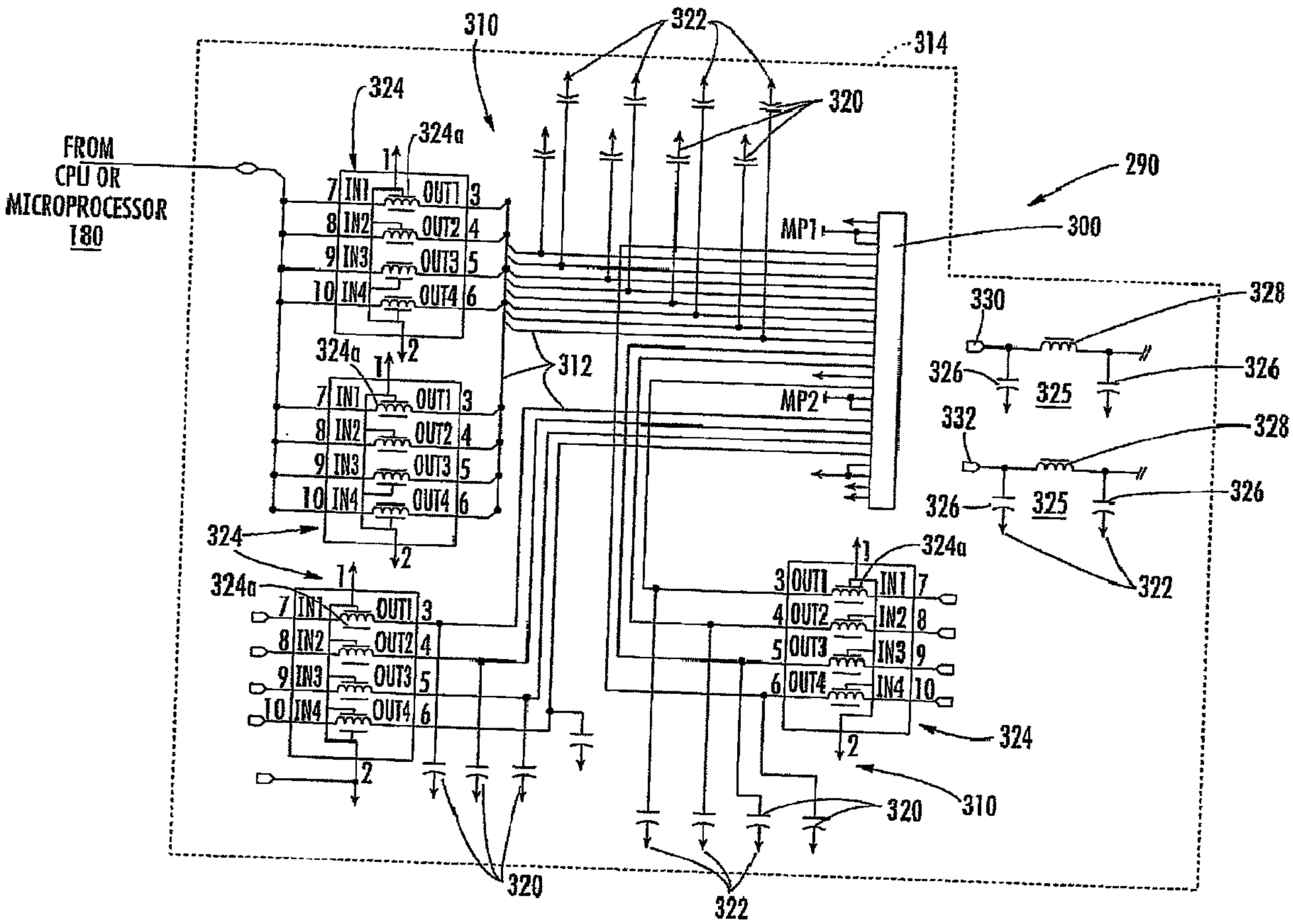

(57) Abrégé/Abstract:
housing and circuit board carried by the housing. Radio frequency (RF) circuitry carried by the circuit board forms a transmitter and receiver. A processor is carried by the circuit board and operative with the RF circuitry. A keyboard connector is mounted on the

CA 2575946 C 2009/07/28

(11)(21) 2 575 946

(13) C

(57) Abrégé(suite)/Abstract(continued):
circuit board. A plurality of Key_ Out and Key_In connection lines are carried by the circuit board and connect the keyboard connector and processor. A keypad is carried by the housing and operatively connected to the keyboard connector. A filter is operative with each connection line for limiting degradation in receiver sensitivity.

(12) INTERNATIONAL APPLICATION PUBLISHED UNDER THE PATENT COOPERATION TREATY (PCT)

(19) World Intellectual Property Organization
International Bureau

(43) International Publication Date
9 March 2006 (09.03.2006)

PCT

(10) International Publication Number
WO 2006/024131 A1

(51) International Patent Classification[7]: H04Q 7/32, H04B 1/10

(21) International Application Number: PCT/CA2005/000306

(22) International Filing Date: 1 March 2005 (01.03.2005)

(25) Filing Language: English

(26) Publication Language: English

(30) Priority Data:
60/605,719 31 August 2004 (31.08.2004) US

(71) Applicant (*for all designated States except US*): **RESEARCH IN MOTION LIMITED** [CA/CA]; 295 Philip Street, Waterloo, Ontario N2L 3W8 (CA).

(72) Inventors: **ZHU, Lizhong**; 518 Mountbatten Avenue, Waterloo, Ontario N2T 2T8 (CA). **CORRIGAN, Michael**; 483 Alexmuir Place, Waterloo, Ontario N2T 1S5 (CA). **JARMUSZEWSKI, Perry**; 762 Cedar Bend Drive, Waterloo, Ontario N2V 2R6 (CA).

(74) Agents: **KINSMAN, L., Anne** et al.; Borden Ladner Gervais LLP, World Exchange Plaza, Suite 1100, 100 Queen Street, Ottawa, Ontario K1P 1J9 (CA).

(81) Designated States (*unless otherwise indicated, for every kind of national protection available*): AE, AG, AL, AM, AT, AU, AZ, BA, BB, BG, BR, BW, BY, BZ, CA, CH, CN, CO, CR, CU, CZ, DE, DK, DM, DZ, EC, EE, EG, ES, FI, GB, GD, GE, GH, GM, HR, HU, ID, IL, IN, IS, JP, KE, KG, KP, KR, KZ, LC, LK, LR, LS, LT, LU, LV, MA, MD, MG, MK, MN, MW, MX, MZ, NA, NI, NO, NZ, OM, PG, PH, PL, PT, RO, RU, SC, SD, SE, SG, SK, SL, SM, SY, TJ, TM, TN, TR, TT, TZ, UA, UG, US, UZ, VC, VN, YU, ZA, ZM, ZW.

(84) Designated States (*unless otherwise indicated, for every kind of regional protection available*): ARIPO (BW, GH, GM, KE, LS, MW, MZ, NA, SD, SL, SZ, TZ, UG, ZM, ZW), Eurasian (AM, AZ, BY, KG, KZ, MD, RU, TJ, TM), European (AT, BE, BG, CH, CY, CZ, DE, DK, EE, ES, FI, FR, GB, GR, HU, IE, IS, IT, LT, LU, MC, NL, PL, PT, RO, SE, SI, SK, TR), OAPI (BF, BJ, CF, CG, CI, CM, GA, GN, GQ, GW, ML, MR, NE, SN, TD, TG).

Published:
— *with international search report*

For two-letter codes and other abbreviations, refer to the "Guidance Notes on Codes and Abbreviations" appearing at the beginning of each regular issue of the PCT Gazette.

(54) Title: MOBILE WIRELESS COMMUNICATIONS DEVICE WITH REDUCED INTERFERENCE FROM THE KEYBOARD INTO THE RADIO RECEIVER

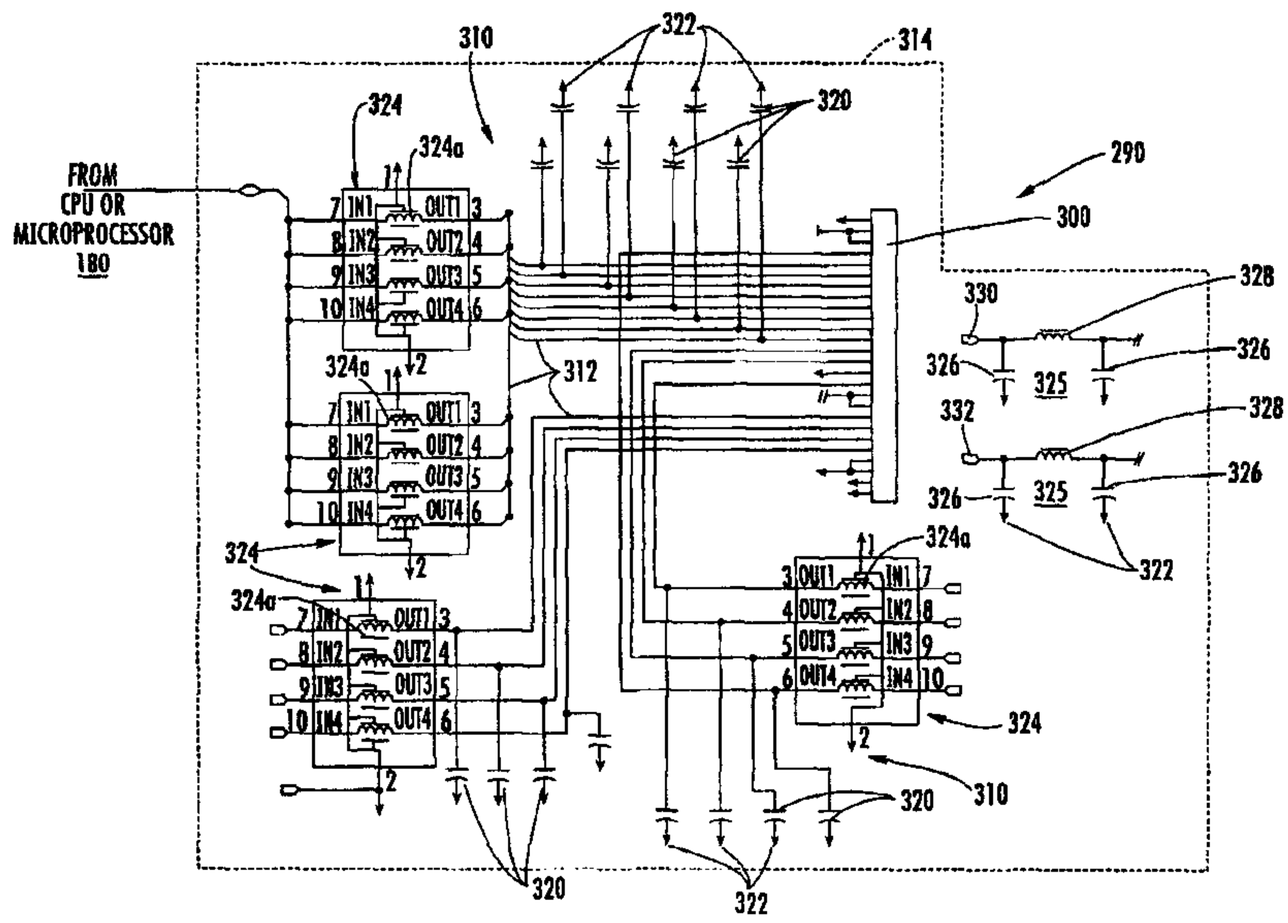

(57) Abstract: housing and circuit board carried by the housing. Radio frequency (RF) circuitry carried by the circuit board forms a transmitter and receiver. A processor is carried by the circuit board and operative with the RF circuitry. A keyboard connector is mounted on the circuit board. A plurality of Key_ Out and Key_In connection lines are carried by the circuit board and connect the keyboard connector and processor. A keypad is carried by the housing and operatively connected to the keyboard connector. A filter is operative with each connection line for limiting degradation in receiver sensitivity.

WO 2006/024131 A1

MOBILE WIRELESS COMMUNICATIONS DEVICE WITH REDUCED INTERFERENCE FROM THE KEYBOARD INTO THE RADIO RECEIVER

Field of the Invention

The present invention relates to the field of communications devices, and more particularly, to mobile wireless communications devices and related methods.

Background of the Invention

Cellular communication systems continue to grow in popularity and have become an integral part of both personal and business communications. Cellular telephones allow users to place and receive phone calls most anywhere they travel. Moreover, as cellular telephone technology is increased, so too has the functionality of cellular devices. For example, many cellular devices now incorporate Personal Digital Assistant (PDA) features such as calendars, address books, task lists, calculators, memo and writing programs, etc. These multi-function devices usually allow users to wirelessly send and receive electronic mail (email) messages and access the internet via a cellular network and/or a wireless local area network (WLAN), for example.

As the functionality of cellular communications devices continues to increase, so too does demand for smaller devices that are easier and more convenient for users to carry. As any circuit boards and electronic components thereon are reduced in size and placed closer together, including antenna and microphone components, various electronic components can pick up conductive energy and create interference within the system. For example, an internal surface mounted microphone could pick up conducted energy directly from a power amplifier or from the radiated energy emitted by an antenna. This unwanted reception of

conducted/near field radiated energy from power amplifiers and antennae is particularly problematic in a packet burst transmission as part of a Global System for Mobile communications (GSM) system, including the 450 MHz, 900 MHz, 1800 MHz and 1900 MHz frequency bands.

Other interfering signals can be generated when the liquid crystal display (LCD) in some mobile wireless communications devices radiates radio frequency (RF) interfering energy and degrades receiver sensitivity. This is problematic where the interfering energy is generated by the microprocessor or central processing unit (CPU) of a wireless mobile communications device and fed into the LCD lines, along with interfering energy generated by the LCD itself. Other problems occur when the conducted and radiated interfering radio frequency (RF) energy is coupled to the mobile wireless communications device causing audio break through tests to fail for both the uplink and downlink. Even the keyboard circuits can create unwanted interference problems. For example, the radio frequency receiver sensitivity is often degraded by the electromagnetic interference (EMF) of digital harmonics from the microprocessor or CPU via the keyboard because of the resulting loop formed by any keyboard circuits. In some instances, strong RF energy, for example, the transmitted power from the radio via the antenna interferes with or couples to the microprocessor or CPU input/output (I/O) lines of a mobile wireless communications device through the keyboard Key-In and Key-Out lines and causes a reset of the microprocessor or CPU.

Summary of the Invention

It is therefore an object of the present invention to provide a mobile wireless communications device with reduced

degradation in receiver sensitivity resulting from electromagnetic interference and digital harmonics from a processor via the keyboard.

In one example of the present invention, a mobile wireless communications device includes a housing and circuit board carried by the housing. Radio frequency (RF) circuitry forms a transmitter and receiver. A processor is carried by the circuit board and is operative with the RF circuitry. A keyboard connector is mounted on the circuit board. A plurality of Key_Out and Key_In connection lines are carried by the circuit board and connect the keyboard and processor. A keypad is carried by the housing and operatively connected to the keyboard connector for communicating with the processor through the keyboard connector and Key_Out and Key_In connection lines. A filter is operative with each connection line for limiting degradation in receiver sensitivity.

In one aspect of the invention, the keyboard connection lines are formed as signal traces on the circuit board. A filter can be a filter element such as a resistor connected serially within each connection line. Each resistor could be about 1,000 ohms. The filter could comprise an array of filter elements, including series resistors, inductors, shunt capacitors, ferrite beads, or a combination thereof. The RF circuitry and processor are preferably operative for cellular communications. The RF circuitry, processor and keyboard can be operative and configured as a wireless local area network (WLAN) device. The housing is preferably configured for handheld operation.

The connection lines are preferably connected in parallel to the keyboard connector. A method is also set forth.

Brief Description of the Drawings

Other objects, features and advantages of the present invention will become apparent from the detailed description of the invention which follows, when considered in light of the accompanying drawings in which:

FIG. 1 is a schematic block diagram of an example of a mobile wireless communications device configured as a handheld device that can be used with the present invention and illustrating basic internal components thereof.

FIG. 2 is a front elevation view of the mobile wireless communications device of FIG. 1.

FIG. 3 is a schematic block diagram showing basic functional circuit components that can be used in the mobile wireless communications device of FIGS. 1-2.

FIG. 4 is front elevational view of the mobile wireless communications device in accordance with one embodiment of the present invention having the front cover removed to illustrate an example of RF circuitry, power amplifier, surface mounted microphone and noise isolation components associated thereof.

FIG. 5 is an enlarged fragmentary sectional view of greater details of the microphone and associated noise isolation components of FIG. 4.

FIG. 6 is a schematic circuit diagram of an LCD display connector and associated filter components that can be used with the mobile wireless communications device of FIGS. 1-3 in accordance with one embodiment of the present invention.

FIG. 7 is a schematic circuit diagram of a LCD display connector and associated filter components that can be used with a mobile wireless local area network (WLAN) communications device in accordance with another embodiment of the present invention.

FIG. 8A is a schematic circuit diagram of a first embodiment of an audio circuit as part of an RF circuit having audio filtering components that can be used with the mobile wireless communications device of FIGS. 1-3.

FIG. 8B is a schematic circuit diagram of a second embodiment of an audio circuit as part of an RF circuit having audio filtering components that can be used with the mobile wireless communications device of FIGS. 1-3.

FIG. 9 is a schematic circuit diagram of another embodiment of an audio circuit as part of an RF circuit similar to FIGS. 8A and 8B, but having a different circuit footprint and different positioning of audio filtering components.

FIG. 10A is an example of a keyboard connector that can be used in the mobile wireless communications device shown in FIGS. 1-3, and adapted to have electromagnetic interference (EMI) filtering components connected thereto.

FIG. 10B is a schematic circuit diagram of one example of EMI filtering components that can be connected to the keyboard connector shown in FIG. 10A and operative for filtering when communications signals are received.

FIG. 11A is a schematic circuit diagram of an example of a key array that can be used in a mobile wireless local area network (WLAN) communications device and adapted to have EMI filtering components connected thereto.

FIG. 11B is a schematic circuit diagram of an EMI filtering components that can be connected to the key array shown in FIG. 11A for filtering when signals are received.

FIG. 12 is a schematic circuit diagram showing a key array and EMI filtering components connected between the key array and keypad connector, all connected on a keyboard, and adapted for use in the mobile wireless communications device

shown in FIGS. 1-3 and operative for filtering when signals are transmitted.

Detailed Description of the Preferred Embodiments

The present invention will now be described more fully hereinafter with reference to the accompanying drawings, in which preferred embodiments of the invention are shown. This invention may, however, be embodied in many different forms and should not be construed as limited to the embodiments set forth herein. Rather, these embodiments are provided so that this disclosure will be thorough and complete, and will fully convey the scope of the invention to those skilled in the art. Like numbers refer to like elements throughout, and prime notation is used to indicate similar elements in alternative embodiments.

The interference problems created when an internal microphone, for example, a surface-mounted technology (SMT) microphone "picks-up" or receives conducted energy directly from a power amplifier and/or from an antenna during a GSM transmitter packet burst are overcome with the present invention. The use of an appropriate RF shielding and filters in one non-limiting example reduces the audible buzz in an audio circuit, for example, as used in the mobile wireless communications device of FIGS. 1-3. In one non-limiting example, a separately isolated radio frequency (RF) shield covers the internal microphone and its associated circuitry to prevent conducted and near field radiated energy emitted by a power amplifier from interfering with the microphone operation. The RF shield also provides adequate isolation from the radiated energy emitted by the antenna during a GSM packet burst. This RF shield is operative in conjunction with an acoustic seal to ensure a good acoustic frequency response.

The different non-limiting embodiments and examples of the present invention described throughout the following description offers several advantages over prior art mobile wireless communications devices, systems and associated methods. By adding electromagnetic interference (EMI) filters to liquid crystal display (LCD) connection lines, the central processing unit (CPU) or microprocessor noise is prevented from reaching the LCD. As a result, the prior art problems associated with an LCD radiating radio frequency (RF) interfering energy and causing degradation of receiver sensitivity, or the microprocessor or CPU generating any interfering energy, is overcome. These prior art disadvantages have been overcome in one particular embodiment of the invention by adding filter components to the LCD circuitry and eliminating any noise before it can be radiated by the LCD and interfere with a received signal.

The prior art problems associated with the electromagnetic interference (EMI) in an audio break-through test for communications devices such as shown in FIGS. 1-3 is also overcome by reducing the conducted and radiated interfering RF energy that is coupled to the mobile wireless communications device, which could create an audible noise and cause RF immunity failure in both the uplink and downlink communications. An EMI filter can be added to the microphone, a USB connector, speaker audio circuits and headset connector at desired circuit points to eliminate the conducted interfering RF energy from the coupling to the audio circuits via a USB charging cable and the radiated, interfering RF energy that is coupled to any audio circuits resulting from the pick-up on a headset cable or other similar connector.

The present invention also overcomes the prior art electromagnetic interference problems associated when the

sensitivity of a radio frequency receiver such as the type shown in FIGS. 1-3 is degraded by any electromagnetic interference, for example, digital harmonics from the microprocessor or CPU via the keypad (keyboard). It is known that the sensitivity of the RF receiver is significantly degraded by the digital noise generated from the microprocessor or other CPU through the Key_In/Key_Out lines and into the keyboard traces and picked-up by the antenna. By adding within the keyboard traces and Key_In/Key_Out lines, EMI filter circuit, for example, filter array such as formed from series resistors or inductors, shunt capacitors, series EMI ferrite beads or a combination of resistor, inductor and capacitor, and ferrite beads, the receiver sensitivity is improved.

The present invention also overcomes the prior disadvantages when strong RF energy, for example, the transmitted power from a mobile wireless communications device such as shown in FIGS. 1-3 and its antenna interferes with or couples to the microprocessor or other CPU input/output lines through the keyboard Key_In and Key_Out lines and causes the microprocessor or CPU to reset. In accordance with one non-limiting embodiment, series elements such as resistors can be applied to the keyboard Key_In and Key_Out lines to dampen the RF energy picked up by these lines from either the generated internal energy or external interfering signals. Specific resistor values are selected to eliminate the RF energy, but also ensure normal CPU/keyboard operation. Other elements can be used, for example, series inductors, inductor and capacitor, or ferrite beads.

A brief description will now proceed relative to FIGS. 1-3, which disclose an example of a mobile wireless communications device, for example, a handheld portable

cellular radio, which can incorporate the non-limiting examples of the various circuits of the present invention. FIGS. 1-3 are representative non-limiting examples of the many different types of functional circuit components and their interconnection, and operative for use with the present invention.

Referring initially to FIGS. 1 and 2, an example of a mobile wireless communications device **20**, such as a handheld portable cellular radio, which can be used with the present invention is first described. This device **20** illustratively includes a housing **21** having an upper portion **46** and a lower portion **47**, and a dielectric substrate (i.e., circuit board) **67**, such as a conventional printed circuit board (PCB) substrate, for example, carried by the housing. A housing cover (not shown in detail) would typically cover the front portion of the housing. The term circuit board **67** as used hereinafter can refer to any dielectric substrate, PCB, ceramic substrate or other circuit carrying structure for carrying signal circuits and electronic components within the mobile wireless communications device **20**. The illustrated housing **21** is a static housing, for example, as opposed to a flip or sliding housing which are used in many cellular telephones. However, these and other housing configurations may also be used.

Circuitry **48** is carried by the circuit board **67**, such as a microprocessor, memory, one or more wireless transceivers (e.g., cellular, WLAN, etc.), which includes RF circuitry, including audio and power circuitry, including any keyboard circuitry. It should be understood that keyboard circuitry could be on a separate keyboard, etc., as will be appreciated by those skilled in the art. A battery (not shown) is also preferably carried by the housing **21** for supplying power to the circuitry **48**. The term RF circuitry

PCT/CA 2005/000306
21 OCTOBER 2005 21.10.05

could encompass the interoperable RF transceiver circuitry, power circuitry and audio circuitry.

Furthermore, an audio output transducer **49** (e.g., a speaker) is carried by an upper portion **46** of the housing **21** and connected to the circuitry **48**. One or more user input interface devices, such as a keypad (keyboard) **23** (FIG. 2), is also preferably carried by the housing **21** and connected to the circuitry **48**. The term keypad as used herein also refers to the term keyboard, indicating the user input devices having lettered and/or numbered keys **35** commonly known and other embodiments, including multi-top or predictive entry modes. Other examples of user input interface devices include a scroll wheel **37** and a back button **36**. Of course, it will be appreciated that other user input interface devices (e.g., a stylus or touch screen interface) may be used in other embodiments.

An antenna **45** is preferably positioned at the lower portion **47** in the housing and can be formed as a pattern of conductive traces that make an antenna circuit, which physically forms the antenna. It is connected to the circuitry **48** on the main circuit board **67**. In one non-limiting example, the antenna could be formed on an antenna circuit board section that extends from the circuit board at the lower portion of the housing. By placing the antenna **45** adjacent the lower portion **47** of the housing **21**, the distance is advantageously increased between the antenna and the user's head when the phone is in use to aid in complying with applicable SAR requirements. Also, a separate keyboard circuit board could be used.

More particularly, a user will typically hold the upper portion of the housing **21** very close to his head so that the audio output transducer **49** is directly next to his ear. Yet, the lower portion **47** of the housing **21** where an audio

AMENDED SHEET

input transducer (i.e., microphone) is located need not be placed directly next to a user's mouth, and can be held away from the user's mouth. That is, holding the audio input transducer close to the user's mouth may not only be uncomfortable for the user, but it may also distort the user's voice in some circumstances. In addition, the placement of the antenna **45** adjacent the lower portion **47** of the housing **21** also advantageously spaces the antenna farther away from the user's brain.

Another important benefit of placing the antenna **45** adjacent the lower portion **47** of the housing **21** is that this may allow for less impact on antenna performance due to blockage by a user's hand. That is, users typically hold cellular phones toward the middle to upper portion of the phone housing, and are therefore more likely to put their hands over such an antenna than they are an antenna mounted adjacent the lower portion **47** of the housing **21**. Accordingly, more reliable performance may be achieved from placing the antenna **45** adjacent the lower portion **47** of the housing **21**.

Still another benefit of this configuration is that it provides more room for one or more auxiliary input/output (I/O) devices **50** to be carried at the upper portion **46** of the housing. Furthermore, by separating the antenna **45** from the auxiliary I/O device(s) **50**, this may allow for reduced interference therebetween.

Some examples of auxiliary I/O devices **50** include a WLAN (e.g., Bluetooth™, IEEE 802.11) antenna for providing WLAN communication capabilities, and/or a satellite positioning system (e.g., GPS, Galileo, etc.) antenna for providing position location capabilities, as will be appreciated by those skilled in the art. Other examples of auxiliary I/O devices **50** include a second audio output

transducer (e.g., a speaker for speaker phone operation), and a camera lens for providing digital camera capabilities, an electrical device connector (e.g., USB, headphone, secure digital (SD) or memory card, etc.).

It should be noted that the term "input/output" as used herein for the auxiliary I/O device(s) **50** means that such devices may have input and/or output capabilities, and they need not provide both in all embodiments. That is, devices such as camera lenses may only receive an optical input, for example, while a headphone jack may only provide an audio output.

The device **20** further illustratively includes a display **22**, for example, a liquid crystal display (LCD) carried by the housing **21** and connected to the circuitry **48**. A back button **36** and scroll wheel **37** can also be connected to the circuitry **48** for allowing a user to navigate menus, text, etc., as will be appreciated by those skilled in the art. The scroll wheel **37** may also be referred to as a "thumb wheel" or a "track wheel" in some instances. The keypad **23** illustratively includes a plurality of multi-symbol keys **24** each having indicia of a plurality of respective symbols thereon. The keypad **23** also illustratively includes an alternate function key **25**, a next key **26**, a space key **27**, a shift key **28**, a return (or enter) key **29**, and a backspace/delete key **30**.

The next key **26** is also used to enter a "*" symbol upon first pressing or actuating the alternate function key **25**. Similarly, the space key **27**, shift key **28** and backspace key **30** are used to enter a "0" and "#", respectively, upon first actuating the alternate function key **25**. The keypad **23** further illustratively includes a send key **31**, an end key **32**, and a convenience (i.e., menu) key **39** for use in placing

cellular telephone calls, as will be appreciated by those skilled in the art.

Moreover, the symbols on each key **24** are arranged in top and bottom rows. The symbols in the bottom rows are entered when a user presses a key **24** without first pressing the alternate function key **25**, while the top row symbols are entered by first pressing the alternate function key. As seen in FIG. 2, the multi-symbol keys **24** are arranged in the first three rows on the keypad **23** below the send and end keys **31**, **32**. Furthermore, the letter symbols on each of the keys **24** are arranged to define a QWERTY layout. That is, the letters on the keypad **23** are presented in a three-row format, with the letters of each row being in the same order and relative position as in a standard QWERTY keypad.

Each row of keys (including the fourth row of function keys **25-29**) is arranged in five columns. The multi-symbol keys **24** in the second, third, and fourth columns of the first, second, and third rows have numeric indicia thereon (i.e., 1 through 9) accessible by first actuating the alternate function key **25**. Coupled with the next, space, and shift keys **26**, **27**, **28**, which respectively enter a "*", "0", and "#" upon first actuating the alternate function key **25**, as noted above, this set of keys defines a standard telephone keypad layout, as would be found on a traditional touch-tone telephone, as will be appreciated by those skilled in the art.

Accordingly, the mobile wireless communications device **20** as described may advantageously be used not only as a traditional cellular phone, but it may also be conveniently used for sending and/or receiving data over a cellular or other network, such as Internet and email data, for example. Of course, other keypad configurations may also be used in other embodiments. Multi-tap or predictive entry modes may

be used for typing e-mails, etc. as will be appreciated by those skilled in the art.

The antenna **45** is preferably formed as a multi-frequency band antenna, which provides enhanced transmission and reception characteristics over multiple operating frequencies. More particularly, the antenna **45** is designed to provide high gain, desired impedance matching, and meet applicable SAR requirements over a relatively wide bandwidth and multiple cellular frequency bands. By way of example, the antenna **45** preferably operates over five bands, namely a 850 MHz Global System for Mobile Communications (GSM) band, a 900 MHz GSM band, a DCS band, a PCS band, and a WCDMA band (i.e., up to about 2100 MHz), although it may be used for other bands/frequencies as well. To conserve space, the antenna **45** may advantageously be implemented in three dimensions although it may be implemented in two-dimensional or planar embodiments as well.

The mobile wireless communications device shown in FIGS. 1 and 2 can incorporate e-mail and messaging accounts and provide different functions such as composing e-mail, PIN messages, and SMS messages. The device can manage messages through an appropriate menu that can be retrieved by choosing a messages icon. An address book function could add contacts, allow management of an address book, set address book options and manage SIM card phone books. A phone menu could allow for the making and answering of phone calls using different phone features, managing phone call logs, setting phone options, and viewing phone information. A browser application could permit the browsing of web pages, configuring a browser, adding bookmarks, and changing browser options. Other applications could include a task, memo pad, calculator, alarm and games, as well as handheld options with various references.

A calendar icon can be chosen for entering a calendar program that can be used for establishing and managing events such as meetings or appointments. The calendar program could be any type of messaging or appointment/meeting program that allows an organizer to establish an event, for example, an appointment or meeting.

A non-limiting example of various functional components that can be used in the exemplary mobile wireless communications device **20** of FIGS. 1 and 2 is further described in the example below with reference to FIG. 3. The device **20** illustratively includes a housing **120**, a keypad **140** and an output device **160**. The output device **160** shown is preferably a display, which is preferably a full graphic LCD. Other types of output devices may alternatively be used. A processing device **180** is contained within the housing **120** and is coupled between the keypad **140** and the display **160**. The processing device **180** controls the operation of the display **160**, as well as the overall operation of the mobile device **20**, in response to actuation of keys on the keypad **140** by the user.

The housing **120** may be elongated vertically, or may take on other sizes and shapes (including clamshell housing structures). The keypad may include a mode selection key, or other hardware or software for switching between text entry and telephony entry.

In addition to the processing device **180**, other parts of the mobile device **20** are shown schematically in FIG. 3. These include a communications subsystem **101**; a short-range communications subsystem **102**; the keypad **140** and the display **160**, along with other input/output devices **106**, **108**, **110** and **112**; as well as memory devices **116**, **118** and various other device subsystems **121**. The mobile device **20** is preferably a two-way RF communications device having voice and data

communications capabilities. In addition, the mobile device **20** preferably has the capability to communicate with other computer systems via the Internet.

Operating system software executed by the processing device **180** is preferably stored in a persistent store, such as the flash memory **116**, but may be stored in other types of memory devices, such as a read only memory (ROM) or similar storage element. In addition, system software, specific device applications, or parts thereof, may be temporarily loaded into a volatile store, such as the random access memory (RAM) **118**. Communications signals received by the mobile device may also be stored in the RAM **118**.

The processing device **180**, in addition to its operating system functions, enables execution of software applications **130A-130N** on the device **20**. A predetermined set of applications that control basic device operations, such as data and voice communications **130A** and **130B**, may be installed on the device **20** during manufacture. In addition, a personal information manager (PIM) application may be installed during manufacture. The PIM is preferably capable of organizing and managing data items, such as e-mail, calendar events, voice mails, appointments, and task items. The PIM application is also preferably capable of sending and receiving data items via a wireless network **141**. Preferably, the PIM data items are seamlessly integrated, synchronized and updated via the wireless network **141** with the device user's corresponding data items stored or associated with a host computer system.

Communication functions, including data and voice communications, are performed through the communications subsystem **101**, and possibly through the short-range communications subsystem **102**. The communications subsystem **101** includes a receiver **150**, a transmitter **152**, and one or more

AMENDED SHEET

antennae **154** and **156**. In addition, the communications subsystem **101** also includes a processing module, such as a digital signal processor (DSP) **158**, and local oscillators (LOs) **161**. The specific design and implementation of the communications subsystem **101** is dependent upon the communications network in which the mobile device **20** is intended to operate. For example, the mobile device **20** may include a communications subsystem **101** designed to operate with the Mobitex™, Data TAC™ or General Packet Radio Service (GPRS) mobile data communications networks, and also designed to operate with any of a variety of voice communications networks, such as AMPS, TDMA, CDMA, PCS, GSM, etc. Other types of data and voice networks, both separate and integrated, may also be utilized with the mobile device **20**.

Network access requirements vary depending upon the type of communication system. For example, in the Mobitex and DataTAC networks, mobile devices are registered on the network using a unique personal identification number or PIN associated with each device. In GPRS networks, however, network access is associated with a subscriber or user of a device. A GPRS device therefore requires a subscriber identity module, commonly referred to as a SIM card, in order to operate on a GPRS network.

When required network registration or activation procedures have been completed, the mobile device **20** may send and receive communications signals over the communication network **141**. Signals received from the communications network **141** by the antenna **154** are routed to the receiver **150**, which provides for signal amplification, frequency down conversion, filtering, channel selection, etc., and may also provide analog to digital conversion. Analog-to-digital conversion of the received signal allows

the DSP **158** to perform more complex communications functions, such as demodulation and decoding. In a similar manner, signals to be transmitted to the network **141** are processed (e.g., modulated and encoded) by the DSP **158** and are then provided to the transmitter **152** for digital to analog conversion, frequency up conversion, filtering, amplification and transmission to the communication network **141** (or networks) via the antenna **156**.

In addition to processing communications signals, the DSP **158** provides for control of the receiver **150** and the transmitter **152**. For example, gains applied to communications signals in the receiver **150** and transmitter **152** may be adaptively controlled through automatic gain control algorithms implemented in the DSP **158**.

In a data communications mode, a received signal, such as a text message or web page download, is processed by the communications subsystem **101** and is input to the processing device **180**. The received signal is then further processed by the processing device **180** for an output to the display **160**, or alternatively to some other auxiliary I/O device **106**. A device user may also compose data items, such as e-mail messages, using the keypad **140** and/or some other auxiliary I/O device **106**, such as a touchpad, a rocker switch, a thumb-wheel, or some other type of input device. The composed data items may then be transmitted over the communications network **141** via the communications subsystem **101**.

In a voice communications mode, overall operation of the device is substantially similar to the data communications mode, except that received signals are output to a speaker **110**, and signals for transmission are generated by a microphone **112**. Alternative voice or audio I/O subsystems, such as a voice message recording subsystem, may

PCT/CA 2005/000306
21 OCTOBER 2005 21.10.05

also be implemented on the device **20**. In addition, the display **160** may also be utilized in voice communications mode, for example to display the identity of a calling party, the duration of a voice call, or other voice call related information.

Any short-range communications subsystem **102** enables communication between the mobile device **20** and other proximate systems or devices, which need not necessarily be similar devices. For example, the short-range communications subsystem may include an infrared device and associated circuits and components, or a Bluetooth™ communications module to provide for communication with similarly-enabled systems and devices.

In accordance with a non-limiting example of the present invention, FIG. 4 shows an example of a circuit layout on part of the circuit board **67** that can be included within the mobile wireless communications device **20** of FIGS. 1-3, and showing a front cover removed from a housing to illustrate a surface mounted microphone **200** and its circuitry and associated noise isolation components as will be explained in greater detail below. The circuit board **67** includes radio frequency (RF) circuitry, for example, cellular telephone communications circuitry, which is mounted in first and second isolation shields or "cans" **210,212**, as often called by those skilled in the art, forming a compartment on the circuit board, each which receive the RF circuitry. Each can **210,212** forms a radio frequency isolation compartment and may include sides and a top. The first can **210** includes a transceiver chip set **220**, for example, a transmitter chip, receiver chip, and local oscillator chip as non-limiting examples with those chips labeled A, B and C. Other illustrated components could include the various resistors, capacitors, amplifiers,

AMENDED SHEET

regulators and other circuit components common to those devices, but not explained in detail.

Located outside first and second isolation cans **210,212**, but mounted on the circuit board **67**, is a liquid crystal display (LCD) connector **230** and a keyboard connector **232**, as well as associated circuit components **234**. These components **230**, **232** and **234** can be configured in different configurations besides the configuration illustrated in the non-limiting example of FIG. 4. The compartment within the second isolation can **212** includes a power amplifier **236** and switch diplexer **238**. Other components **240** are mounted within the compartment and form the resistors, capacitors, transistors, and inductors necessary to drive the audio and power circuits for the microphone, power amplifier and other circuits.

To provide microphone isolation, a radio frequency isolation shield **250**, formed in the illustrated non-limiting example as a third isolation "can" **250**, is positioned at a corner of the second "can" **212**, and forms another isolation compartment at this corner. The shield is formed as a separate metallic housing secured to the circuit board and surrounding the microphone, effectively covering, i.e., shielding the entire microphone. Although a "can" configuration formed as a metallic housing with top and sides and is used for the RF shield, other configurations could be used. The compartment formed by the isolation shield **250** receives a microphone **200** formed preferably as a surface mounted microphone integrated circuit chip **200** on the circuit board **67**. As illustrated in this non-limiting configuration, this places the microphone chip adjacent to the bottom center of the device **20** where the sound hole is typically located in the cover of a cellular phone or similar mobile wireless communications device. The present

invention overcomes the drawback when the microphone **200** is in relatively close proximity to the RF circuitry such that the microphone picks-up unwanted noise. This is particularly problematic when the RF circuitry is transmitting Global Systems for Mobile communications (GSM) transmission packet bursts, for example, but not limited to GSM. This type of noise often results in an audible buzz during operation. Furthermore, the noise problem can be further compounded by increases in diameter of any sound hole in the housing cover, even small diameter holes. This problem worsens as the diameter of the acoustical tube that connects the sound hole to the microphone increases.

To reduce this noise resulting from the RF circuitry, the metallic shield or "can" forming an isolation shield includes a side and top metal wall, i.e., forming a complete isolation shield surrounding, i.e., covering the microphone **200** and its associated circuitry to provide isolation from the RF circuitry. This isolation shield provides the necessary isolation from the RF amplifiers and from any energy radiated from the antenna.

FIG. 5 shows an enlarged, fragmentary, sectional view of the microphone **200** of FIG. 4 when the communications device **20** is assembled and a housing cover, such as including keyboard plastics, is positioned over the housing and circuit board. The microphone **200** has an associated assembly that includes a rubber or other polymer acoustical tube **252** that connects a sound hole **254** in the housing cover **256** forming part of keyboard plastics with the microphone **200**, which extends through a hole **258** in the top of the microphone isolation shield **250**. It should be understood that other suitable materials could also be used for the acoustical tube **252**. The housing cover **256** could be formed from plastic or similar material and have access holes (not

PCT/CA 2005/000306
21 OCTOBER 2005 21.10.05

shown) for corresponding keys of a telephone keypad, or in the case of a cellular phone with a personal digital assistant (PDA) or e-mail/Internet capabilities, an alphanumeric keypad, as appreciated by those skilled in the art and shown in FIG. 2 as a non-limiting example.

The keyboard plastics, such as shown in FIG. 4, are preferably formed as a separate keyboard positioned over the circuit board **67**. This separate keyboard includes a keyboard, i.e., keypad connector, which engages the keyboard connector **232**. Mounted on the keyboard are a keypad array circuit, the keypad or keyboard connector that engages the keyboard connector on the main circuit board **67**, and Key_In and Key_Out lines that connect the keypad connector and the keypad array. These lines could be formed as signal traces. Examples of these components on a keyboard are shown in FIG. 12. This keyboard could be part of the housing cover **256** or separate from the housing cover. Thus, throughout this description, the term housing cover is broad enough to encompass the keyboard as a separate plastic or similarly configured keyboard or other support that covers all or a portion of the circuit board **67** and contains the keypad connector, Key_In/Key_Out lines and keypad array circuit, such as shown in FIG. 12, as a non-limiting example.

In addition, an isolation ring **260** is positioned between the microphone isolation shield **250** and the housing cover **256**. This ring **260** surrounds the acoustical tube **252**. When the communications device **20** is assembled and the front housing cover **256** is installed, the downward force on the ring **260** causes it to contact both the microphone isolation shield **250** and the housing cover **256** to provide RF and acoustic sealing, as will be appreciated by those skilled in the art. The ring **260** is preferably formed from a metal material. The isolation shield **250** and its associated ring

AMENDED SHEET

260 could be configured and dimensioned to provide a desired acoustic frequency response, as will be appreciated by those skilled in the art.

Representative distances as non-limiting examples for the configuration shown in FIG. 5 are now set forth. It should be understood that these non-limiting examples of dimensions can vary depending on the design, configuration, and frequencies used.

The distance between the housing cover **256** and the top surface isolation of microphone isolation shield **250** could be about 0.1 mm, for example, as indicated by dimension "A" and the sound hole **254** in the housing cover **256** could be about 2.0 mm or less as represented by the dimension "B". The acoustical tube **252** may have a diameter of about 5.0 mm as represented by the dimension "C" and the diameter of the isolation ring **260** can be about 10.0 mm as represented by the dimension "D", as non-limiting examples. Additional filters, such as ferrite choke filters, for example, can be used inside the microphone isolation shield **250** to reduce conducted interference to a greater extent, as will be appreciated by those skilled in the art. Furthermore, the microphone isolation shield **250** can be implemented with devices other than cellular telephones. For example, a portable, wireless local area network (WLAN) communications device may transmit voice/sound data over a WLAN device and thus include a microphone positioned in a similar manner to that discussed above. Similar noise reduction components could be used as non-limiting examples.

It should be understood that the acoustic channel formed within the acoustic tube **252** allows the communications device **20** to pass a specific acoustical mark for certification and allows a certain frequency response

out of the cavity and its microphone isolation shield **250**, i.e., for network certification.

As noted before, the LCD in certain examples of the communications device **20** can radiate RF interfering energy and degrade receiver sensitivity. Interfering energy can also be generated by the CPU of the communications device **20**. This energy can be fed into the LCD lines, along with interfering energy generated by the LCD. FIG. 6 is a schematic circuit diagram showing a portion of a LCD circuit **290** having an LCD connector **300** and its filter components associated therewith that can be used with the mobile wireless communications device of FIGS. 1-3. FIG. 7 shows a LCD display circuit **350**, LCD connector **400** and filter components operative with a wireless local area network (WLAN) communications device using similar features explained with reference to the mobile wireless communications device of FIGS. 1-3. The dashed line portion shown in FIGS. 6 and 7 indicates the general layout of LCD circuit components that could be included on a circuit board, including associated filter components and LCD connection lines.

The LCD **160**, such as shown in FIG. 3, has a microprocessor (or CPU) **180** connection to the display **160** via an LCD connector **300** such as shown in FIG. 6. This connection is sometimes problematic because the LCD generates relatively high quality visual outputs but also generates radio frequency (RF) energy. When used in a mobile wireless communications device **20** such as a mobile handheld cellular phone, a PDA or a wireless local area network (WLAN) device, for example, the RF energy from the LCD can cause interference with the RF components of the device because they are typically in relatively close proximity to each other. This is particularly true with

devices that use internal antennas, for example antennas positioned within a housing on a printed circuit board (PCB) or other similar antenna.

These microprocessors or CPUs generally operate at fairly high clock speeds, for example, based upon a 30 MHz clock signal which could be increased to three or four times that speed for internal use by the microprocessor. Thus, the microprocessor **180** may introduce harmonics into the connection lines to the LCD, which may in turn create further RF interference, as will be appreciated by those skilled in the art.

As shown in FIG. 6, electromagnetic interference (EMI) filters **310** are advantageously connected to the connection lines **312** extending between the microprocessor **180** and the LCD connector **300** to reduce the interference caused by harmonics from the microprocessor **180**. The dashed line **314** in FIG. 6 indicates a functional area on the circuit board **67** which would include the various components, including the LCD connector **300** and the EMI filters **310** associated with the LCD connector **300**.

By way of example, EMI filters can include respective bypass capacitors **320** connected between the LCD connection lines **312** and ground **322** as illustrated. The capacitors **320** that are shown in FIG. 6 can have a value of about 68 pF. In association with the capacitors **320** and the LCD connection lines **312** are EMI filters connected to the LCD circuitry to reduce the RF energy before it can be radiated by the LCD and interfere with the RF components. For example, the EMI filters can be EMI filters **324** such as KNA series EMI filters manufactured by AVX Corp. Examples of such filters include those sold under the designation as KNA 32200 and similar, KNA 32XXX series filters that are

PCT/CA 2005/000306
21 OCTOBER 2005 21.10.05

illustrated in the embodiments shown in FIGS. 6 and 7. Of course, other suitable EMI filters can also be used.

The LCD connector **300** typically includes a mounting plate-to-ground pin, and in the illustrated example, two such mounting plate-to-ground pins are labeled MP1 and MP2. The filters **324** are typically LC filters that give an excellent frequency response with respect to any attenuating noise coming from the microprocessor **180** to the LCD **160**. These filters **324** are particularly adequate with respect to different frequency bands, e.g., the GSM 900 MHz and PCS 1900 MHz. These filters give about 30 to 40 decibel (dB) attenuation on these bands. Each filter **324** can be formed as a filter array as illustrated, for example, as an array of inductors **324a** as illustrated.

The described LCD circuit can also include an LBAT terminal **330** and VBAT terminal **332**, each having an appropriate filter **325** as illustrated in FIG. 6, using a pie configuration of capacitors **326** and inductors **328** for filtering.

FIG. 7 shows a LCD display circuit **350** that could be used with a mobile wireless communications device **20** such as a WLAN device and having a somewhat different circuit footprint configuration as compared to the circuit footprint configuration shown in FIG. 6. Similar functional components in this embodiment are given reference numerals starting in the 400 series. The functional area of the circuit is shown at **414**. This circuit **350** uses 12 pF capacitors **420** connected to ground **422**, the LCD connector **400**, and into the LCD connection lines **412**, which in turn, connect into the filter **424**, formed as a filter array as illustrated and similar to that shown in FIG. 6. In this particular embodiment, however, ferrite beads **460** or similar inductor components are connected between the LCD connection lines **412** and the filter arrays **424**, as illustrated. The

AMENDED SHEET

circuit configuration in FIG. 7 is somewhat different than the circuit illustrated in FIG. 6 because a WLAN communications device would work at about 2.4 GHz. The ferrite beads **460** in combination with the capacitors **420** and filter arrays **424** are found to enhance performance. A voltage regulator circuit **470** can be operatively connected to the filter array **424**, lines **412** and capacitors **420** as illustrated, and include appropriate ground, enable, Vin and Vout terminals.

The KNA series of filters **324, 424** are a distributed constant type LC filter that prevents ringing caused by circuit impedance. These types of filters are suitable for digital circuits and visual line circuits. They have an excellent noise attenuation over wide frequency ranges and is a low profile of about H=1.0 mm thickness that is suitable for small electronic devices. They can have a cutoff frequency at above 200 MHz and 100 milliamp rated current with 25 volts DC.

Referring once again to FIG. 3, the wireless mobile communications device **20** such as a handheld cellular communications device, includes a microprocessor (or CPU) **180**, microphone **112**, speaker **110**, and serial communications port **108**, such as an RS-232 or universal serial bus (USB) port, for example. The microphone **112** and speaker **110** are used for audio (i.e., voice) input and output during cellular telephone calls, for example, as will be appreciated by those skilled in the art. The device can also include auxiliary input/output (I/O) connectors **106**, such as a headset connector, for example.

The serial port **108** can be used by the microprocessor **180** to communicate with a host computer, for example. In particular, in certain embodiments, the device **20** can provide personal digital assistant (PDA) features, as well

as e-mail/Internet capabilities. In this case, any calendar, contacts, e-mails and similar functions can be synchronized between the device **20** and a host computer by the microprocessor **180**, as will be appreciated by those skilled in the art. Moreover, the serial port **108** can be used for charging a battery of the device **20**, e.g., by connecting the serial port to an AC/DC converter.

While the serial port **108** provides a relatively easy and convenient way for users to charge this device **20**, a drawback of this approach is the interference that can be introduced onto the serial bus from an AC power source. Also, various audio components of the device **20** (e.g., the microphone **112**, the speaker **110**, headset connector, etc.) can be susceptible to interference from external RF sources, such as AM/FM or short wave radio and similar transmissions. This is particularly true in the 80 MHz to the 2 GHz frequency range, for example.

The susceptibility of the communications device **20** to interference over a serial bus during charging and/or from RF transmissions interfering with the audio components decreases the overall interference immunity of the device. Some regulating bodies are now requiring wireless communications devices to comply not only with interference guidelines (i.e., to not cause excessive interference), but also have a certain level of immunity to interference from other RF sources. By way of an example, RnTte immunity testing is now required for many RF communications devices in Europe. Unfortunately, the test can be subject to interference.

FIGS. 8A and 8B show a basic audio circuit **500**, including serial bus connections that can be used for mobile wireless communications device **20** shown in FIGS. 1-3. This circuit **500** now has certain types of values of filters

placed around the device to reduce immunity. Basic audio components are shown in the dashed rectangular box and include two microphone audio switches **502**, which include a headset detect circuit **504** that is triggered when the headset jack has an external speaker microphone connected thereto. It detects the microphone and switches the lines over. At the receiver speaker **506** are two speaker audio switches **510**, each with a detect circuit **512** that detects when the earphone is connected and switches the line over, and inductor component **514** operative with the receiver speaker **506** and the audio switches **510**. A physical jack is indicated at **520** and receives a jack input and connects to headset detect line and terminal **521**, which also includes a serially connected inductor **522**. The described components are connected together and operative with the microprocessor and other components, for example, various inductors, diodes, capacitors, resistors, and associated circuit components.

To increase the immunity (i.e., reduce the susceptibility) of the device **20** to electromagnetic interference (EMI), a plurality of EMI filters are added to the audio and/or serial bus circuit **500** of the communications device **20**. As shown in FIGS. 8A and 8B, for example, choke filters (i.e., inductors) can include respective individual inductors for this purpose. A choke filter **540** is operatively connected into connection line **542** between the physical jack **520** and the microprocessor **180**. This connection line **542** includes a capacitor circuit **544**. Another choke filter **550** is operatively connected to the microphone audio switches **502**. Yet another choke filter **560** is operatively connected to the physical jack **520** and the microprocessor **180** on a connection line **562**. Although the inductor or choke filters as illustrated and positioned in

the respective selected circuit positions, it should be understood that other filters can be used for the present invention.

The choke filter **540** also can interconnect to a resistor divider circuit **541** that includes resistors **541a, 541b** for changing the bias on the choke filter **540** as shown in FIG. 8B. This particular circuit layout using the resistor divider **541** shown in FIG. 8B is more sensitive to differential AC and DC lines. The resistor divider circuit **541** allows a different bias, canceling some noise.

Other basic components included in FIGS. 8A and 8B include the test points **570** near the receiver speaker. Some proposed components and circuit designs were removed. For example, a resistor circuit indicated by the dashed X at **572** near the physical jack **520** and a transistor circuit indicated by the dashed X at **574** were initially included in a circuit design and operatively connected to the ground connection of the physical jack and the microprocessor. These circuits **572, 574** were removed as indicated by the dashed-out box.

FIG. 9 is a schematic circuit diagram for an audio circuit **580** that includes serial bus connections and having another circuit footprint, such as for a mobile wireless communications device **20**, and showing similar components in a different configuration. Any similar components have been given the same reference numeral. This circuit **580** also includes an operational amplifier circuit **581** operatively connected to the microprocessor **180** and operative as a filter or buffer. FIG. 9 also shows a microphone circuit **582**, which would be operative with microphone audio switches **502**, even though in this fragmentary schematic circuit diagram it is shown separate. Choke filter **583** is operatively connected to the microphone circuit **582**. A

choke filter **584** is operatively connected to the physical jack **520** and the operational amplifier circuit **581**. Another choke filter **585** is operatively connected to a microphone audio switch **502**. Other circuit components can be connected as illustrated in this non-limiting example.

A previously designed inductor RL filter as indicated by the dashed lines and crossed out "X" at **590** was found not to be as operative as the choke filters as described and removed from the circuit design. The choke filters are advantageous at the frequency band about 40 MHz, which has a strong impact on the immunity performance of the radio. Critical spots are selectively chosen for these ESP filters designed in these examples of choke filters. A capacitor circuit **586** is connected between operational amplifier **581** and input jack **520** for determining connection. A transistor circuit **586a** is included in this design and operatively connected between the operational amplifier circuit **581** and into connection lines for the filter **584** and input jack **520**. The circuit **580** includes other components that are connected as illustrated in this non-limiting example.

By way of example, the choke filters as described with reference to FIGS. 8A, 8B and 9 could be ferrite filters, for example, although other suitable filter components and/or materials may also be used, as will be appreciated by those skilled in the art. In addition to positioning the EMI filters to reduce unwanted interference, other components connected to the audio and/or serial bus circuitry can be scrutinized to determine if interference susceptibility effects.

The use of the added choke filters advantageously reduces conducted interfering energy introduced to the audio components via a serial (i.e., USB) charging cable and other sources. This further reduces radiated interfering RF

energy introduced to the audio components via the microphone **112** (FIG. 3) or the microphone of a connected headset, for example.

As noted before, the keypad (keyboard) and its associated circuitry connected to other components can create interference. This can be especially true when the keypad (keyboard) is in close proximity. FIGS. 10A and 10B show a respective keyboard connector **600** that can be used in the mobile wireless communications device shown in FIGS. 1-3 and have EMI filtering components connected thereto. This keyboard connector **600** includes appropriate LED pins and lines that connect to serial elements as filtering components **602** and Key-Out and Key-In lines as shown in FIG. 10B. In the illustrated embodiment, the keyboard connector **600** is a female connector and receives a male plug extending from the separate keypad connector positioned on a separate keyboard and connects thereto.

FIG. 10B is a schematic circuit diagram of an example of EMI filtering components **602** that can be connected to the keyboard connector **600** shown in FIG. 10A and used in the mobile wireless communications device of FIGS. 1-3 and operative for filtering when receiving signals.

FIG. 11A is a schematic circuit diagram of a key array circuit **650** for a keypad, which can be used in a mobile wireless communications device **20** such as a local area network (WLAN) communications device. This key array circuit **650** could be on a separate keyboard. FIG. 11B is a schematic circuit diagram of an example of the filtering components **652** that can be connected either to the Key_In or Key_Out lines and used in a mobile wireless local area network (WLAN) communications device and operative when receiving signals. It should be understood that the key

array circuit **650** includes various Key_In and Key_Out and other lines and terminals as illustrated.

It should be understood that the microprocessor (or CPU) **180** as shown in FIG. 3 has a keypad (keyboard) **140** coupled to the microprocessor, and the cellular communication subsystem **101**. The cellular communication subsystem **101** includes a cellular receiver **150** and cellular transmitter **152**, and their respective associated antennas **154** and **156**. Of course, it should be noted that a single antenna can be used in certain embodiments.

The keypad **140** may be a numeric keypad for use in placing cellular telephone calls, as will be appreciated by those skilled in the art. Moreover, in certain embodiments in which the device **20** advantageously provides personal digital assistant (PDA) and/or email/Internet functionality, the keypad **140** may include alphanumeric keys and other function keys, as will also be appreciated by those skilled in the art.

The microprocessor **180** may operate at clock speed of tens or even hundreds of megahertz (or higher) in a typical cellular device performing PDA operations, for example. Yet, such relatively high clock speeds can introduce digital harmonics in the lines connecting the microprocessor **180** with the keypad **140**. This may result in RF interference energy, which reduces the sensitivity of the receiver **150**. That is, the sensitivity of the RF receiver **150** may be significantly degraded by the digital noise generated by the microprocessor **180** on the Key-Out and Key-In lines, which is radiated from the keyboard traces and picked up by the antenna **154**.

In accordance with an embodiment of the present invention shown in FIGS. 10A and 10B, and another embodiment shown in FIGS. 11A and 11B, electromagnetic interference

(EMI) filters **602, 652** are advantageously coupled to the Key_In and Key_Out lines to reduce the RF interference picked up by the antenna **154**. An exemplary EMI filter array **602** is illustrated in FIG. 10B. The EMI filter array **602** illustratively includes series elements formed as resistors **R1001** through **R1006** respectively coupled to Key_Out lines **KEY_OUT_0** through **KEY_OUT_5**, and resistors **R1007** through **R1011** respectively coupled to key in lines **KEY_IN_0** through **KEY_IN_4**. The values of the resistors **R1001-R1011** are selected based upon the parasitic capacitance and/or inductance of the Key_Out and Key_In lines to provide an RC, RL, or RLC filter with desired filtering characteristics. Yet, these values should also be selected so as not to cause undue signal degradation over the Key_Out and Key_In lines. By way of example, 1K Ohm resistors were used in the illustrated example, although other values may be used in other embodiments. These series elements formed as resistors and connected between the microprocessor or other CPU circuit and keyboard connector has been found advantageous when high Q values are involved. The resistors could be surface mount resistors on the circuit board **67**. The resistors can be connected in-line with the printed conductive traces used for Key_Out and Key_In lines. Other configurations are possible, of course.

Moreover, other types of EMI filtering components may be used in addition to, or instead of, those noted above. For example, resistors, inductors, shunt capacitors, EMI ferrite beads, or a combination thereof may be used in different embodiments, as will be appreciated by those skilled in the art.

An exemplary embodiment of a portion of a circuit for a wireless local area network (WLAN) device with a similar EMI filter array is illustrated in FIGS. 11A and 11B. The

filter array **652** connects to the key array circuit **650** via the Key_Out and Key_In lines (FIG. 11A). The EMI filter array **652** illustratively includes series elements formed as resistors **R1001-R1006** and **R1020** respectively connected to Key_Out lines **KEY_OUT_0** through **KEY_OUT_6**, and resistors **R1007-R1011** respectively connected to Key_In lines **KEY_IN_0** through **KEY_IN_4**. Here again, other series elements or other filtering arrangements may be used as well.

As noted before with reference to FIG. 3, the keypad **140** may be a numeric keypad array for use in placing cellular telephone calls, as will be appreciated by those skilled in the art. In the embodiment illustrated in FIG. 3, the device **20** advantageously provides personal digital assistant (PDA) and/or email/Internet functionality. As such, the keypad **140** illustratively includes alphanumeric keys and other function keys, to allow text typing as well as number entry for placing phone calls.

During transmission, radio frequency (RF) energy from the transmitter **152** and its associated antenna **156** can interfere with or couple to the input/output (I/O) lines of the microprocessor **180** through the KEY_IN and KEY_OUT lines connecting the microprocessor and the keypad **140**. This interference may cause a variety of problems, potentially as severe as resetting the microprocessor. This is especially problematic with the higher power GSM cellular phones and assorted communications devices that operate with about two (2) watts and higher output power. This, in turn, could cause a user to lose a message or other document in progress, or to be cut off during a phone call, for example.

In accordance with one embodiment of the present invention shown in FIG. 12, a keypad connector **700** is positioned on a separate keyboard and is operatively connected to a keypad array circuit **720** shown in schematic

PCT/CA 2005/000306
21 OCTOBER 2005 21.10.05

circuit diagram. This keypad connector operates as a keyboard connector that connects to the keyboard connector on the circuit board. Various light emitting diodes (LED's) **730** are connected to the keypad connector. Test points **732** are illustrated as operatively connected to the keypad array circuit. The keypad connector **700** can be similar in design as the keyboard connector **600** except with a reverse configuration to allow the connectors to clip or connect together. In the embodiment shown in FIG. 12, a plurality of series connected elements, e.g., resistors **R1-R10**, are advantageously coupled to the KEY_IN and KEY_OUT lines on the separate keyboard to dampen RF energy picked up by these lines, either from the antenna **156** or from external interference. The values of the resistors **R1-R10** are carefully chosen based upon the parasitic capacitance and/or inductance of the Key-Out and Key-In lines to provide an RC, RL, or RLC filter with desired filtering characteristics. However, it is important that these values not be so large that they effect the normal operation of the microprocessor **180** and/or the keyboard **140.**

In the example illustrated in FIG. 12, the resistors **R1-R10** are all 500 Ohm resistors, although other resistor values may be used in different embodiments. The series elements, e.g., resistors **R1-R10**, are preferably positioned on the keyboard itself adjacent the keys. For example, the resistors **R1-R10** may be surface mount resistors on a keyboard printed circuit board (PCB) or other board, such as a main board **67**, and the resistors may be connected in line with the printed conductive traces used for the Key_Out and Key_In lines. Of course, other configurations known to those skilled in the art are also possible.

In addition, other types of EMI filtering components may be used in addition to, or instead of, those noted

AMENDED SHEET

above. For example, resistors, inductors, shunt capacitors, EMI ferrite beads, or a combination thereof may be used in different embodiments, as will be appreciated by those skilled in the art. It should also be noted that the above-described EMI filtering components may be used in devices other than cellular devices, such as mobile handheld wireless local area network (WLAN) devices, for example, as will be appreciated by those skilled in the art. Operative with the keyboard connection are Light Emitting Diodes (LED's), which emit light therefrom.

This application is related to copending patent applications entitled, **"MOBILE WIRELESS COMMUNICATIONS DEVICE WITH REDUCED MICROPHONE NOISE FROM RADIO FREQUENCY COMMUNICATIONS CIRCUITRY," "MOBILE WIRELESS COMMUNICATIONS DEVICE WITH REDUCED INTERFERING ENERGY FROM THE DISPLAY AND RELATED METHODS," "MOBILE WIRELESS COMMUNICATIONS DEVICE WITH REDUCED INTERFERING ENERGY INTO AUDIO CIRCUIT AND RELATED METHODS," and "MOBILE WIRELESS COMMUNICATIONS DEVICE WITH REDUCED INTERFERING ENERGY FROM THE KEYBOARD,"** which are filed on the same date and by the same assignee and inventors.

Many modifications and other embodiments of the invention will come to the mind of one skilled in the art having the benefit of the teachings presented in the foregoing descriptions and the associated drawings. Therefore, it is understood that the invention is not to be limited to the specific embodiments disclosed, and that modifications and embodiments are intended to be included within the scope of the appended claims.

CLAIMS:

1. A mobile wireless communications device comprising:

a housing;

a circuit board carried by the housing and including radio frequency (RF) circuitry forming a transmitter and receiver, and a processor carried by the circuit board and operative with the RF circuitry;

a keyboard connector mounted on the circuit board;

a plurality of parallel Key_Out and Key_In connection lines formed as uninterrupted and planar signal traces on the circuit board and connecting the keyboard connector and processor;

a keypad carried by the housing and operatively connected to the keyboard connector for communicating with the processor through the keyboard connector and Key_Out and Key_In connection lines; and

a resistor connected serially within each connection line and forming an electromagnetic interference (EMI) filter array, each resistor having a value selected based on the parasitic inductance of the Key_Out and Key_In lines to provide a desired RC, RL or RLC filter characteristic for limiting degradation in receiver sensitivity.

2. A mobile wireless communications device according to Claim 1, wherein each resistor is about 1000 ohms.

3. A mobile wireless communications device according to Claim 1, wherein said filter array comprises an array of filter elements.

4. A mobile wireless communications device according to Claim 3, wherein said filter elements comprise series resistors, inductors, shunt capacitors, ferrite beads or a combination thereof.

5. A mobile wireless communications device according to Claim 1, wherein said RF circuitry and processor are operative for cellular communications.

6. A mobile wireless communications device according to Claim 1, wherein said RF circuitry, processor and keypad are operative and configured as a wireless local area network (WLAN) device.

7. A mobile wireless communications device according to Claim 1, wherein said housing is configured for handheld operation.

8. A method for making a mobile wireless communications device, which comprises:

providing a housing, a circuit board carried by the housing and including radio frequency (RF) circuitry forming a transmitter and receiver, and a processor carried by the circuit board and operative with RF circuitry, a keyboard connector mounted on the circuit board, a plurality of parallel Key_Out and Key_In connection lines formed as uninterrupted and planar signal traces on the circuit board and connecting the keyboard connector and processor, and a keypad carried by the housing and operatively connected to the keyboard connector for communicating with the processor through the keyboard connector and Key_Out and Key_In connection lines; and

limiting degradation in receiver sensitivity by serially connecting a resistor into each connection line to be operative therewith as an electromagnetic interference (EMI) filter array, each resistor having a value selected based on the parasitic inductance of the Key_Out and Key_In connection lines to provide a desired RC, RL or RLC filter characteristic.

9. A method according to Claim 8, which further comprises forming an array of filter elements operative with the connection lines.

10. A method according to Claim 9, which further comprises forming the filter elements as series resistors, inductors, shunt capacitors, ferrite beads or a combination thereof.

11. A method according to Claim 8, which further comprises configuring the RF circuitry, processor and keypad as a wireless local area network device.

12. A method according to Claim 8, which further comprises configuring the housing for handheld operation.

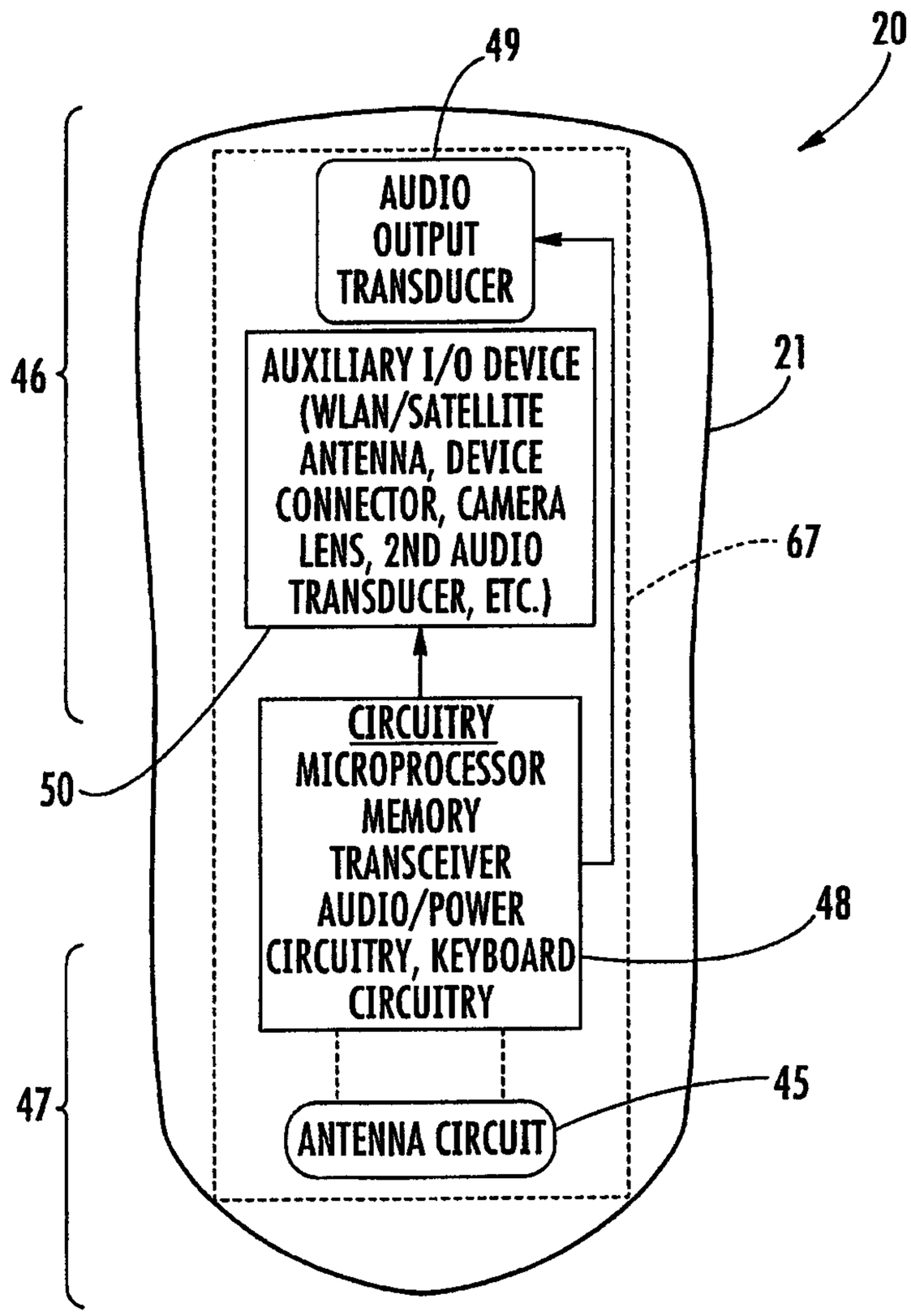
20
49
AUDIO OUTPUT TRANSDUCER
46
AUXILIARY I/O DEVICE (WLAN/SATELLITE ANTENNA, DEVICE CONNECTOR, CAMERA LENS, 2ND AUDIO TRANSDUCER, ETC.)
21
67
50
CIRCUITRY
MICROPROCESSOR
MEMORY
TRANSCEIVER
AUDIO/POWER CIRCUITRY, KEYBOARD CIRCUITRY
48
47
45
ANTENNA CIRCUIT

FIG. 1

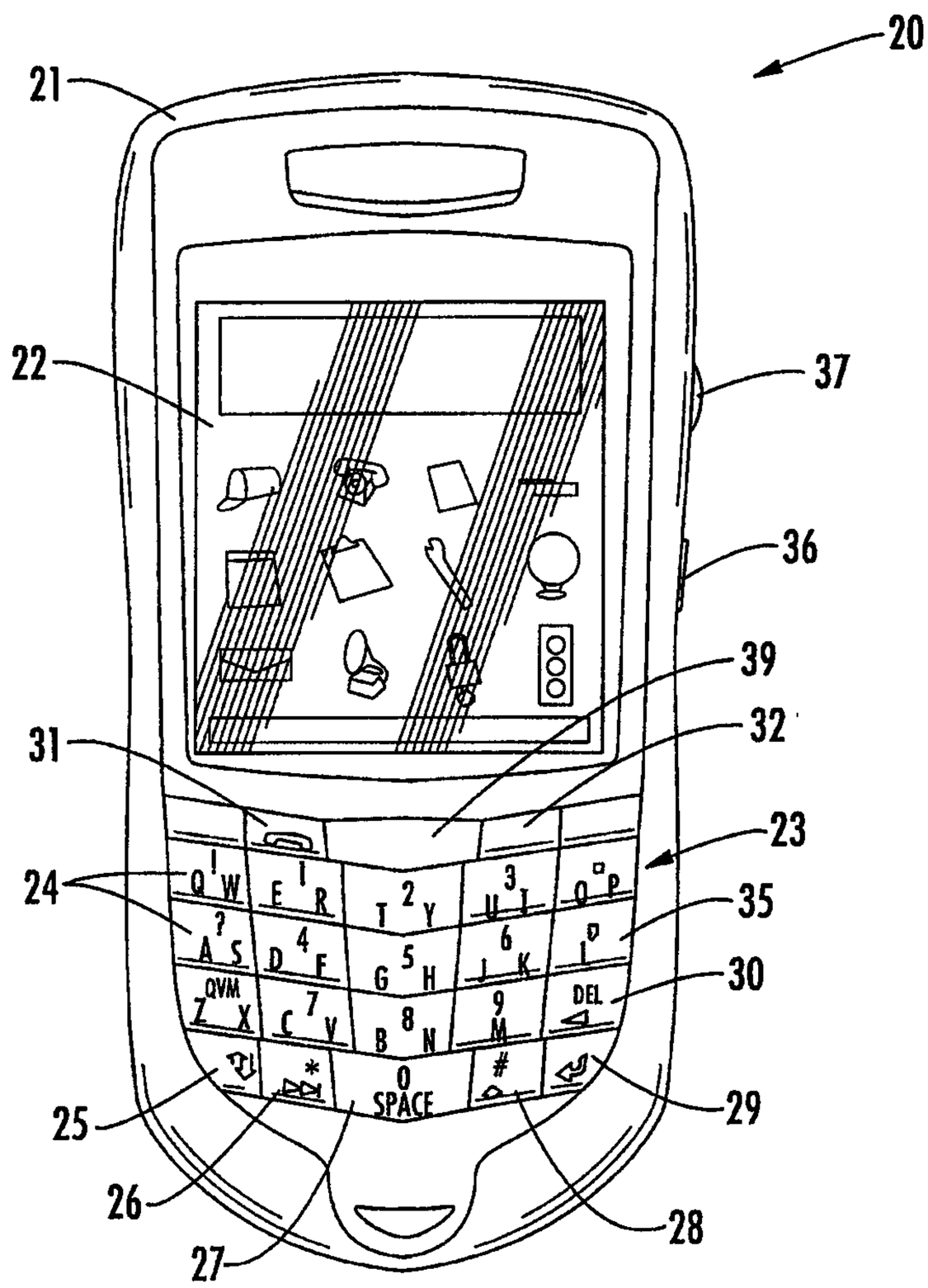

FIG. 2

PCT/CA 2005/000306
21 OCTOBER 2005 21.10.05

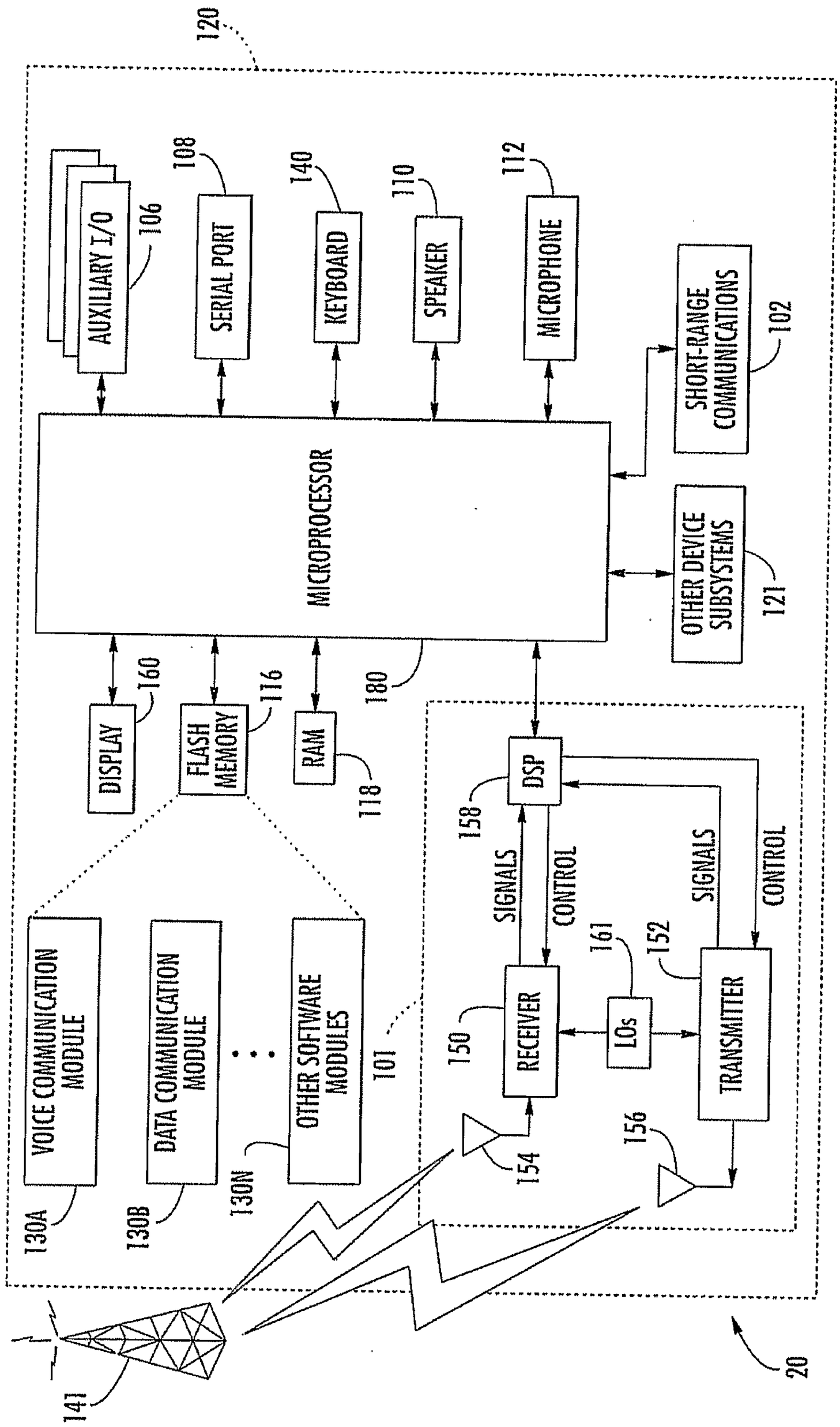

FIG. 3

AMENDED SHEET

PCT/CA 2005/000306
21 OCTOBER 2005 21.10.0

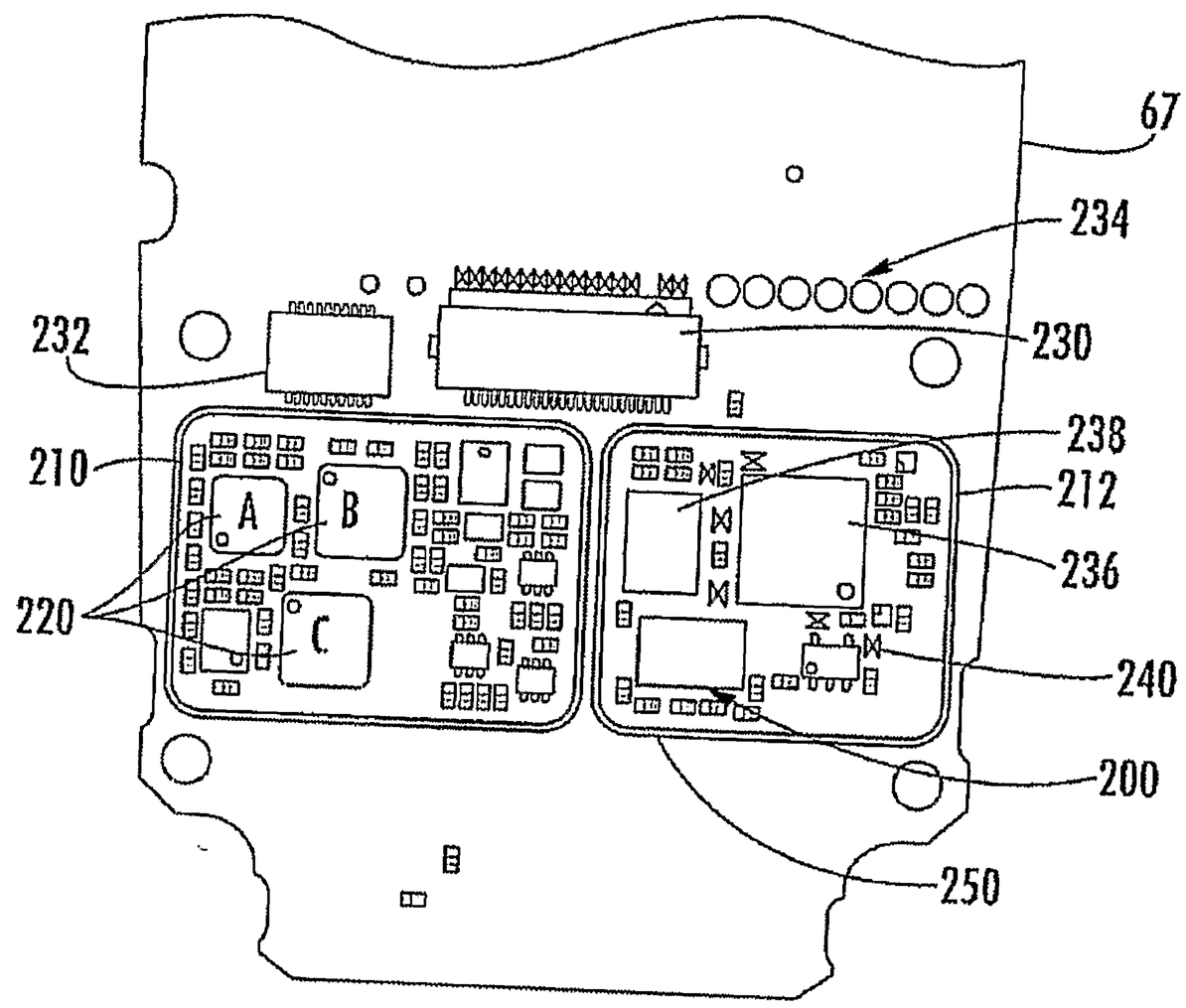

FIG. 4

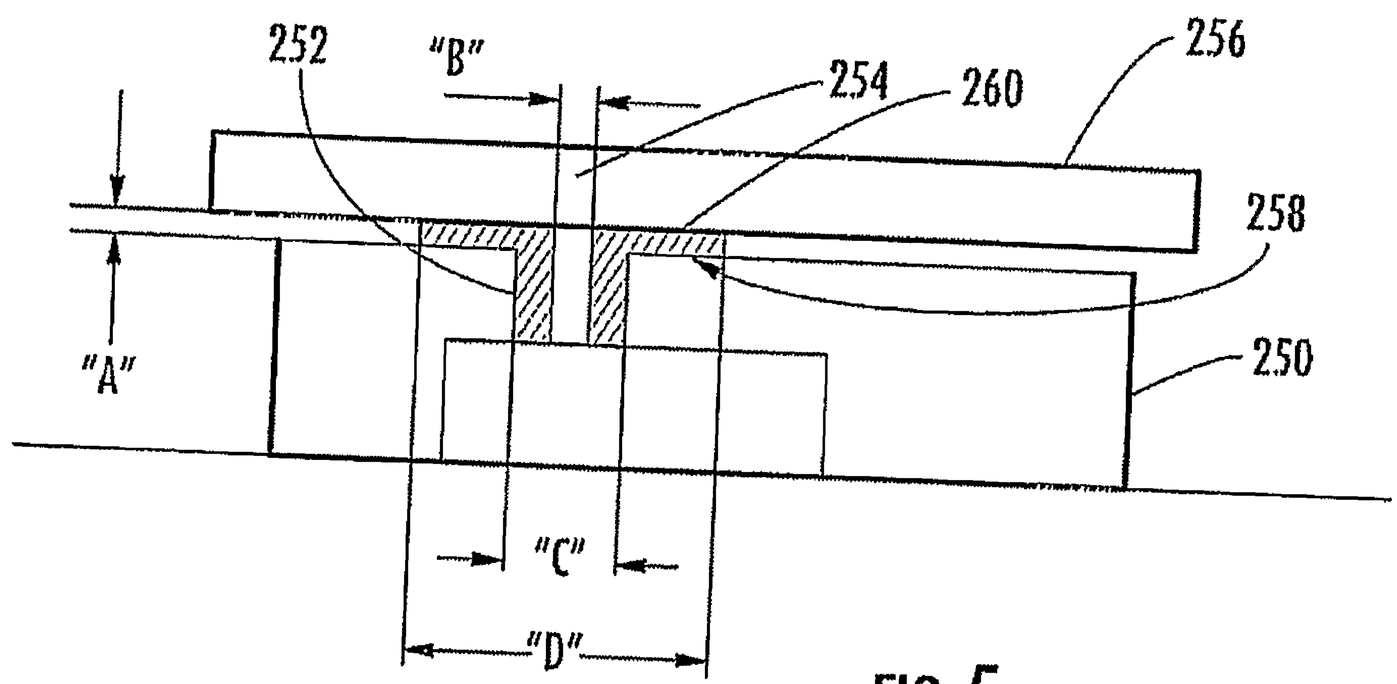

FIG. 5

PCT/CA 2005/000306
21 OCTOBER 2005 21.10.05

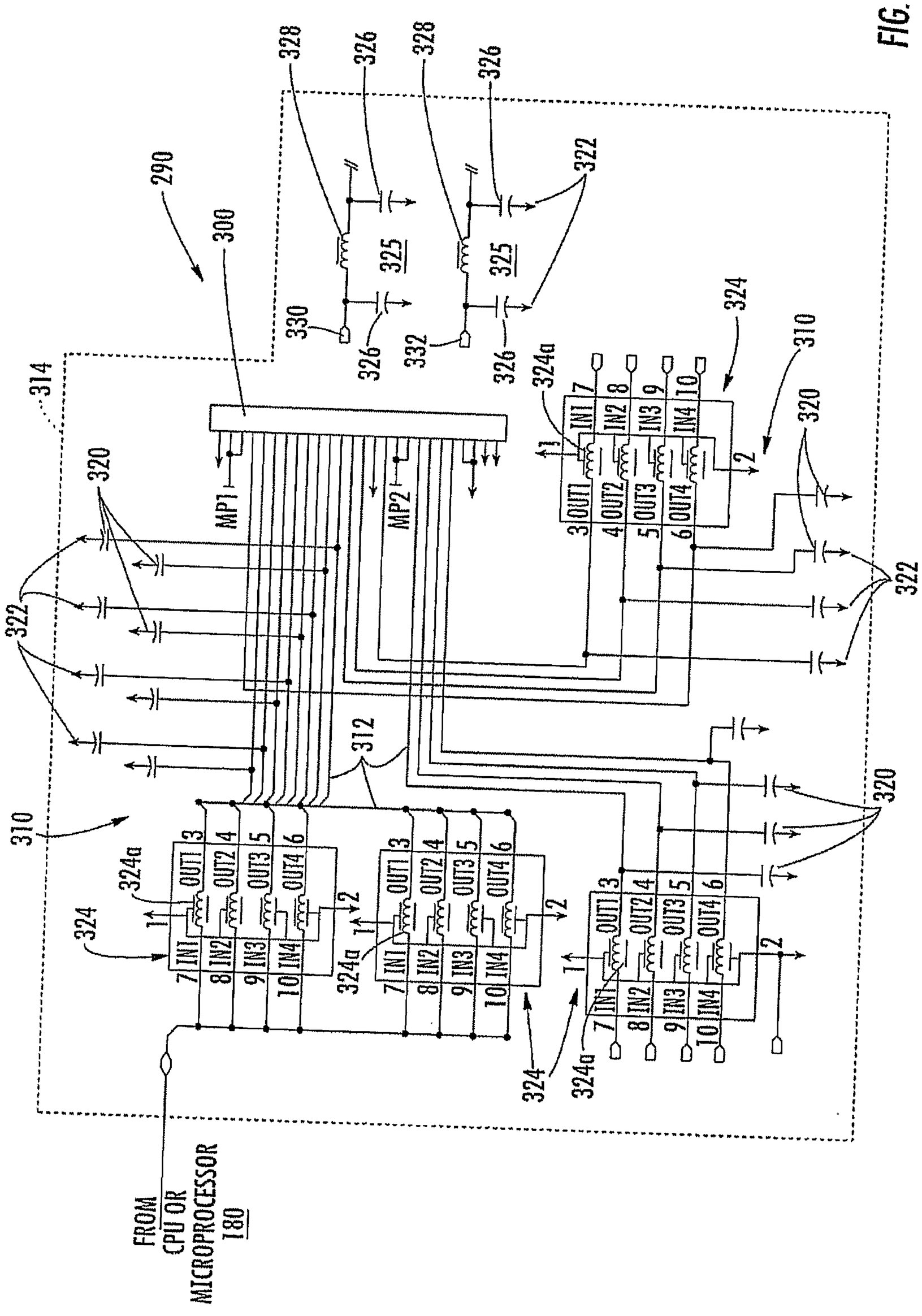

FIG. 6

AMENDED SHEET

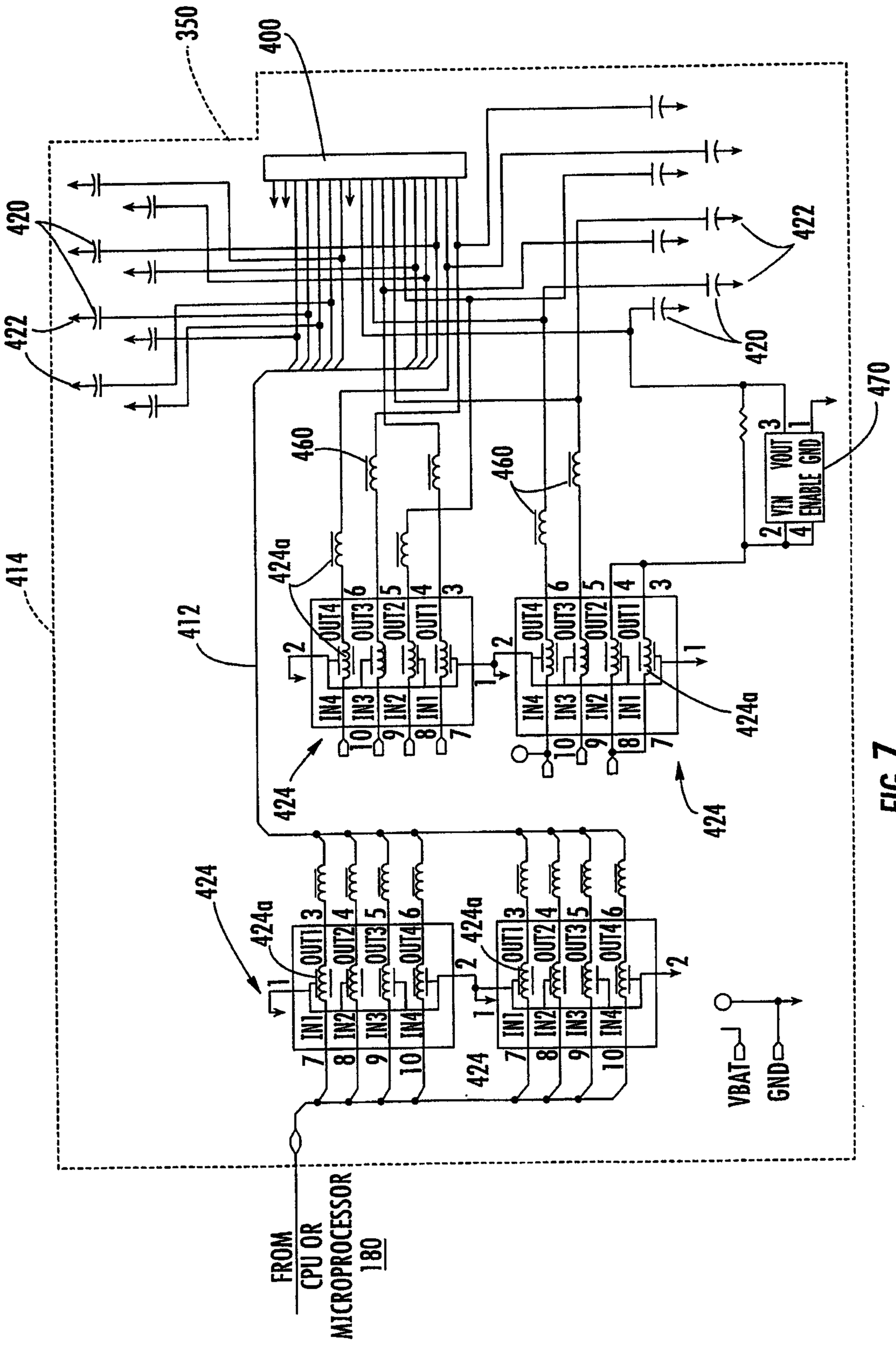
350
400
420
422
414
412
460
424a
424
470
VIN
VOUT
ENABLE
GND
IN1
IN2
IN3
IN4
OUT1
OUT2
OUT3
OUT4
VBAT
GND
FROM
CPU OR
MICROPROCESSOR
180

FIG. 7

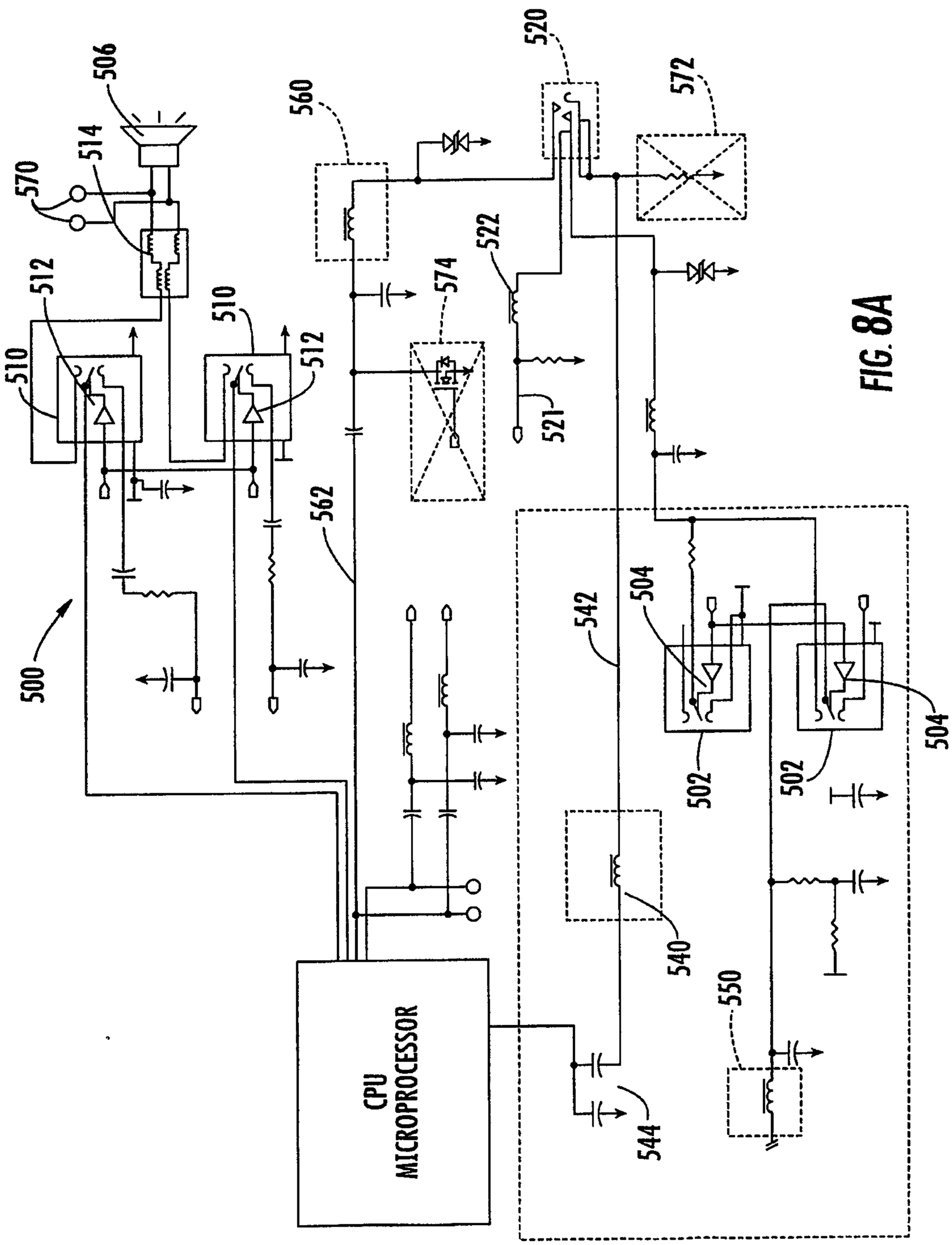
500
506
514
570
512
510
510
512
560
520
572
574
522
521
562
542
504
502
502
504
540
550
544
CPU
MICROPROCESSOR

FIG. 8A

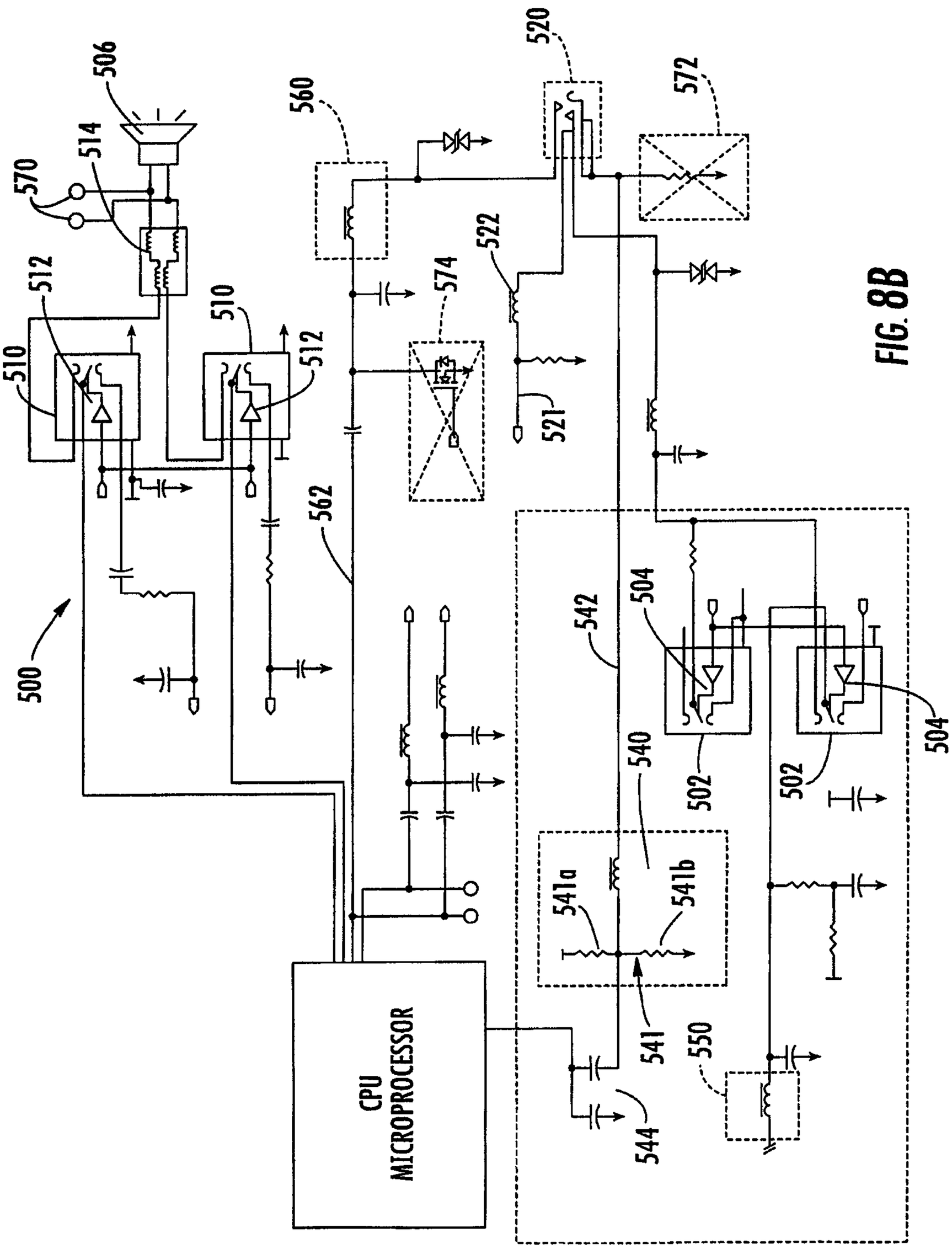
500
506
514
570
512
510
510
512
560
520
572
574
522
521
562
542
504
502
502
504
540
541a
541b
541
550
544
CPU
MICROPROCESSOR

FIG. 8B

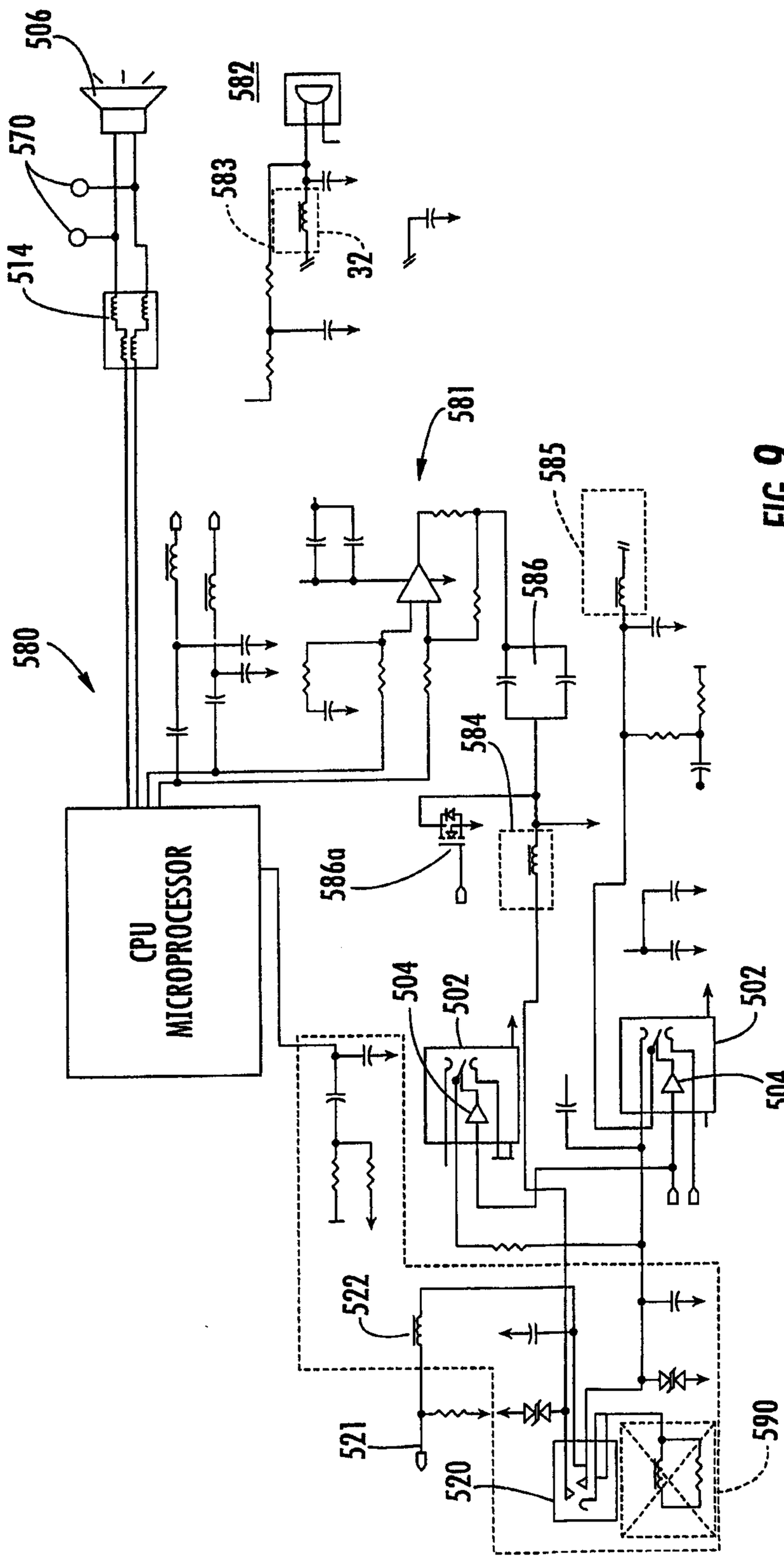
506
570
514
582
583
32
581
585
586
580
584
586a
CPU
MICROPROCESSOR
504
502
502
504
522
521
520
590

FIG. 9

KEYBOARD CONNECTOR

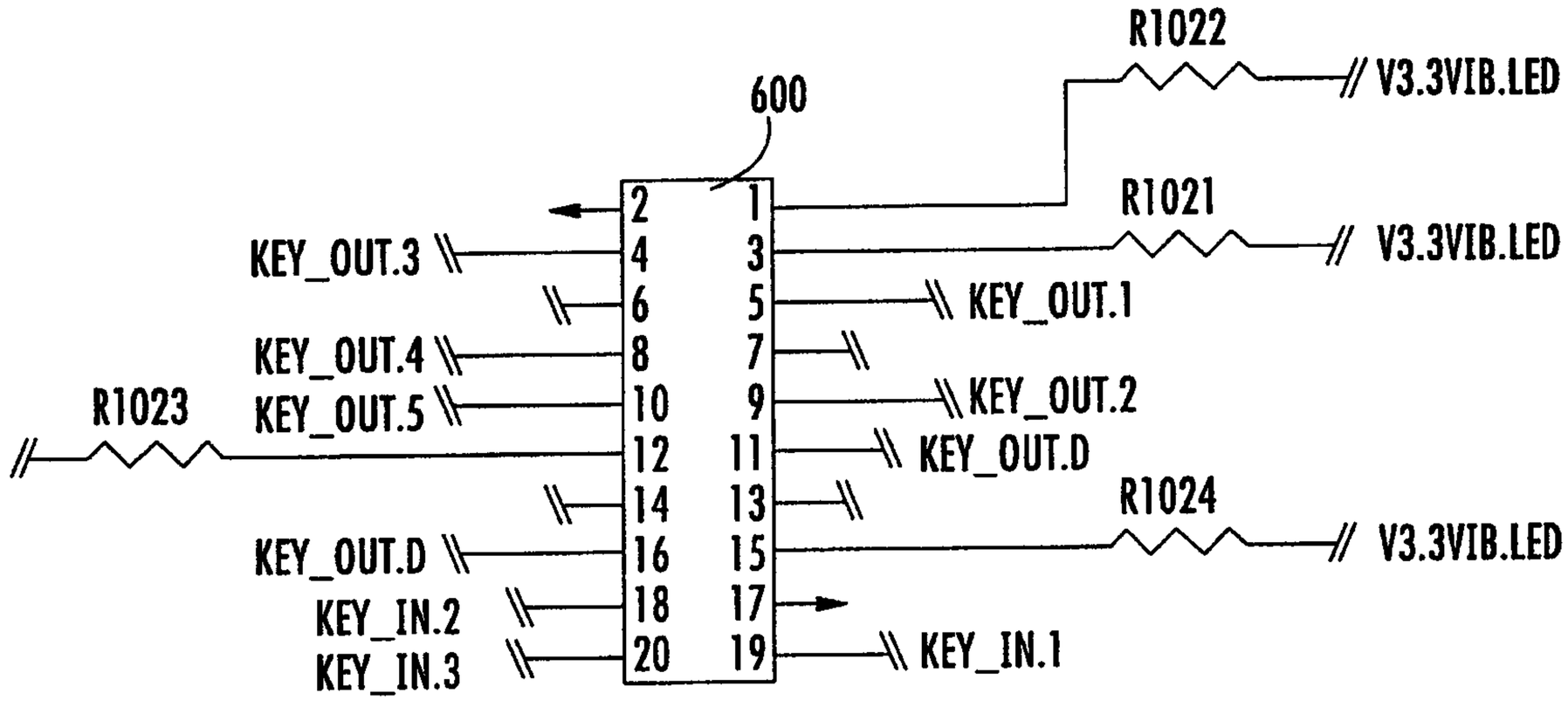

FIG. 10A

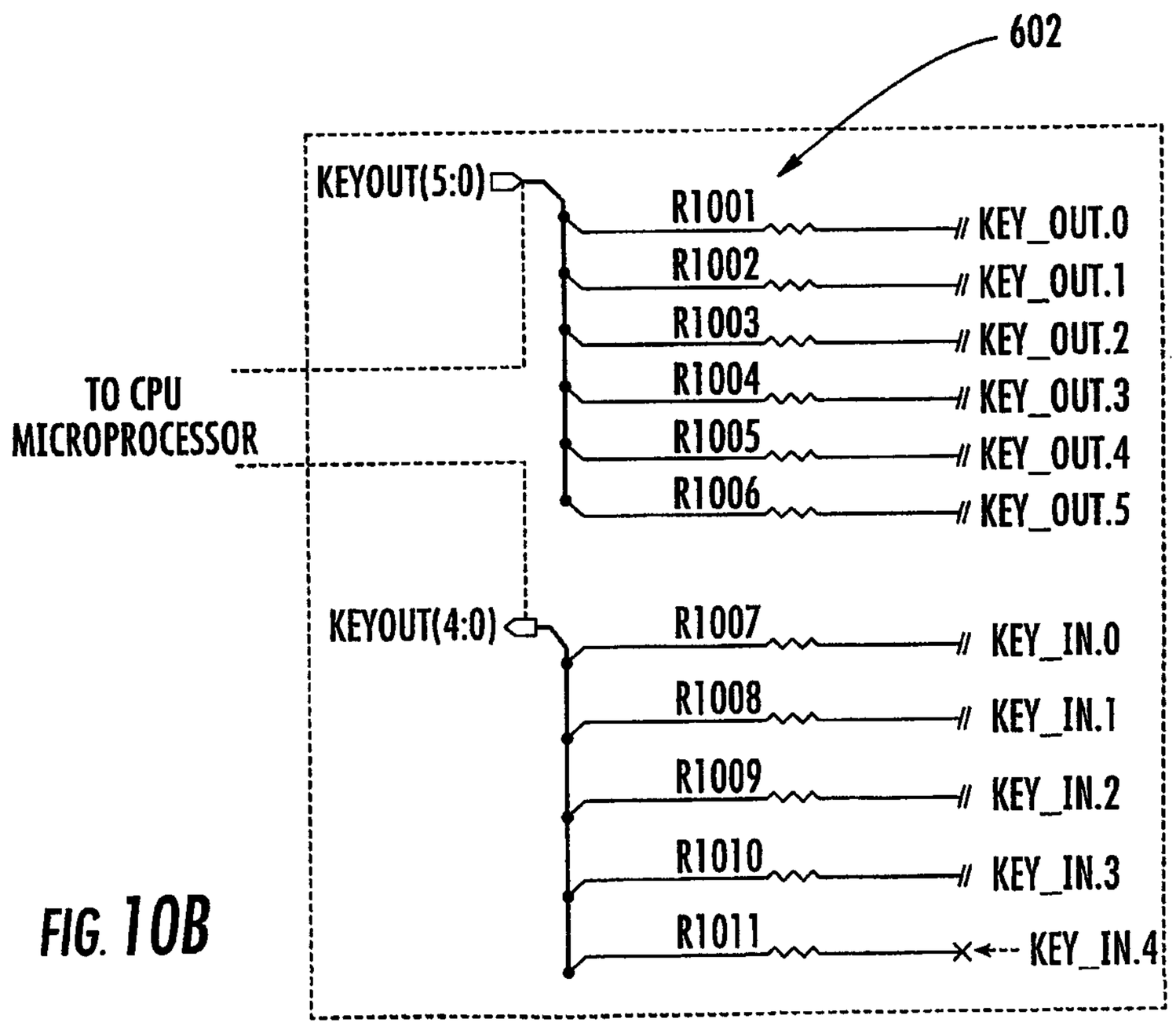

FIG. 10B

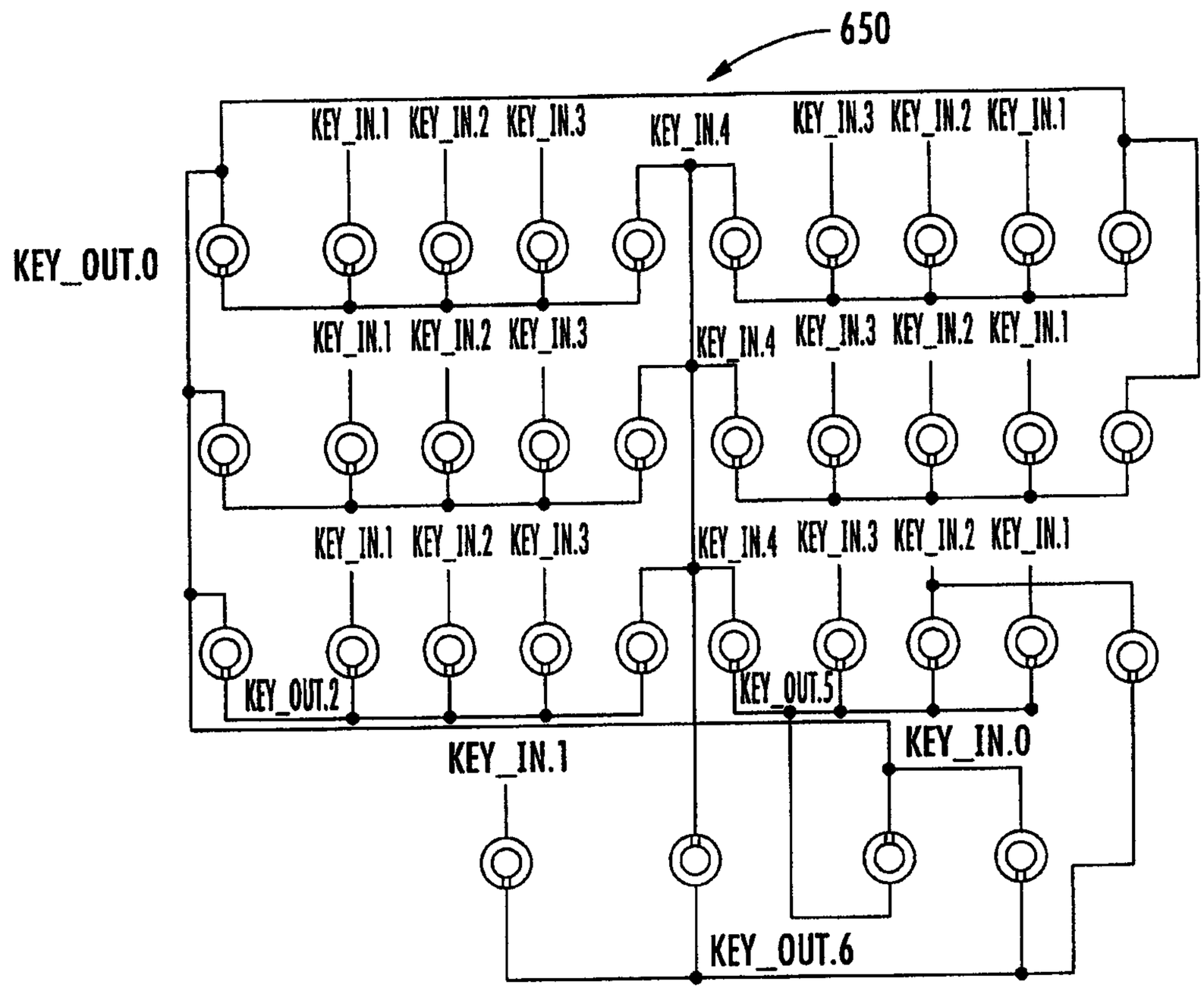

FIG. 11A

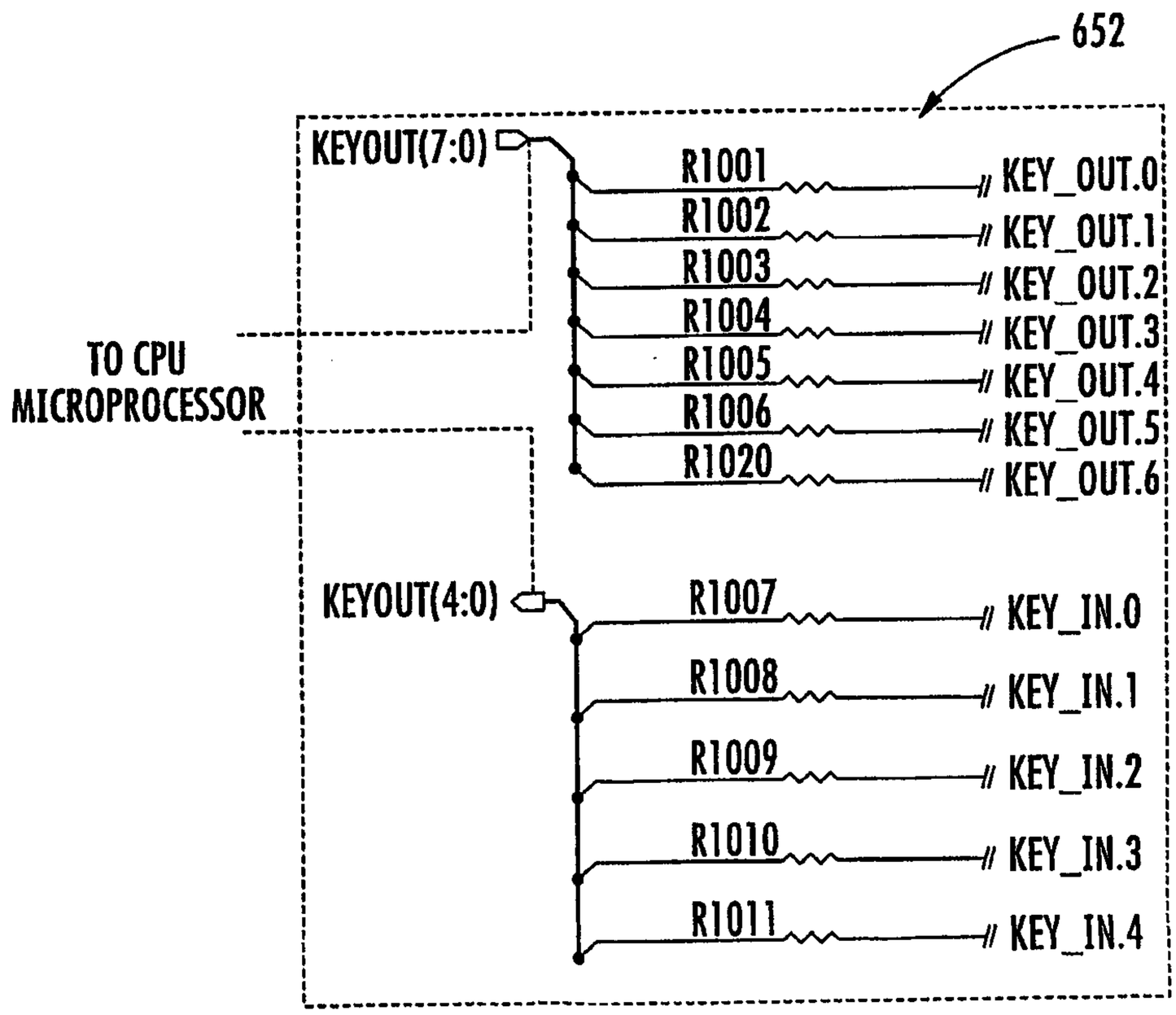

FIG. 11B

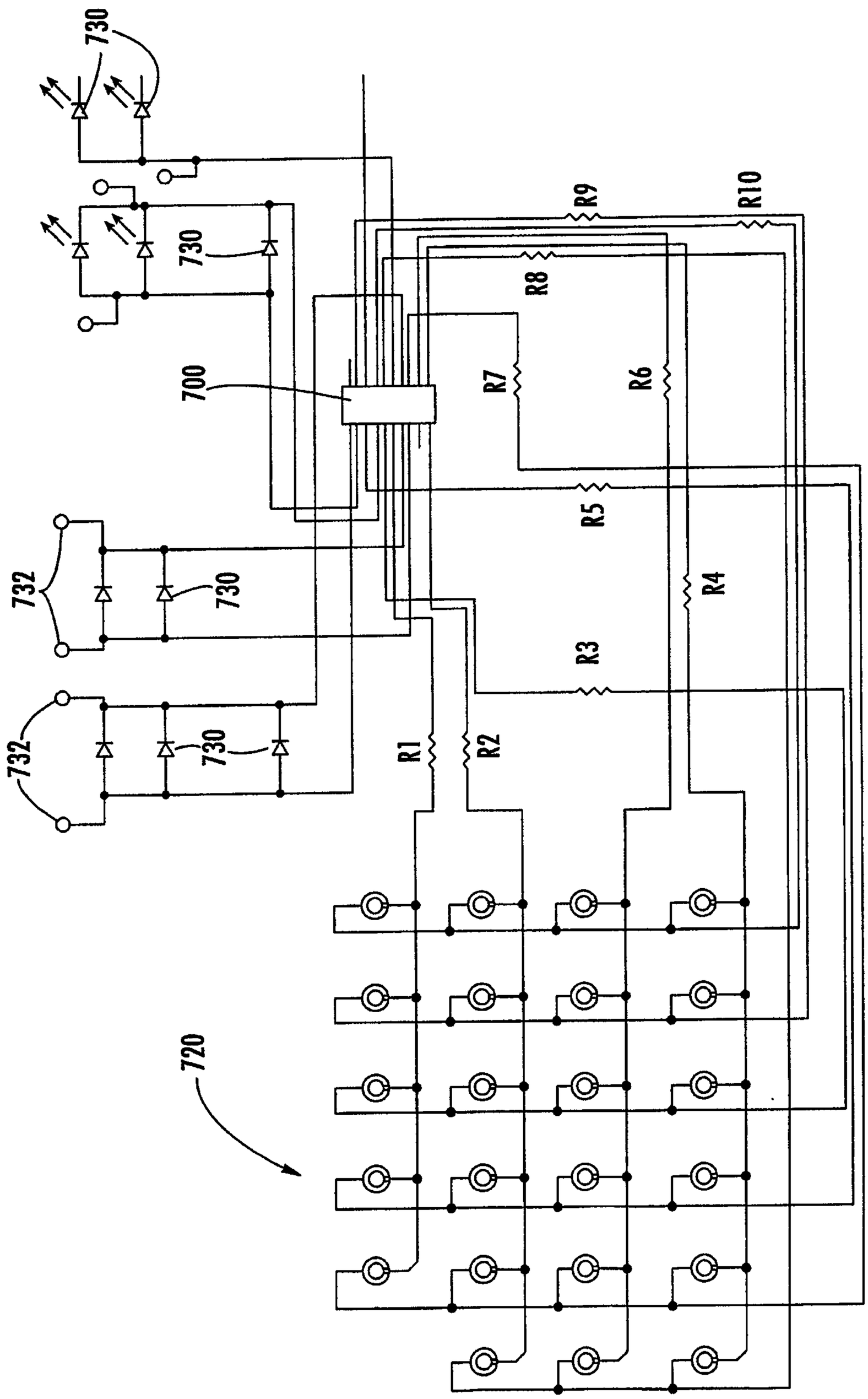

FIG. 12

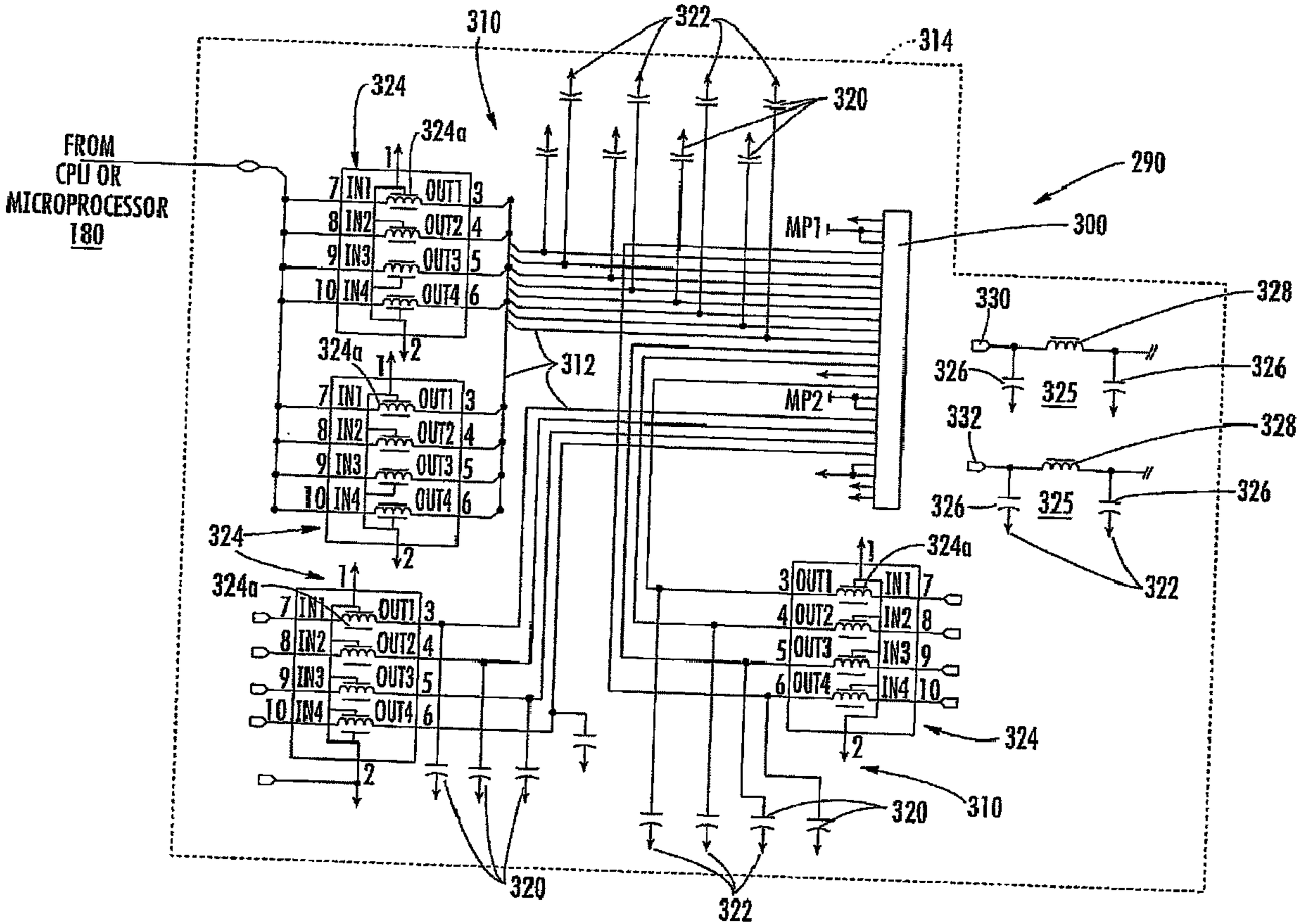
FROM
CPU OR
MICROPROCESSOR
180
310
322
314
320
324
324a
290
300
MP1
MP2
312
330
328
326
325
332
IN1
IN2
IN3
IN4
OUT1
OUT2
OUT3
OUT4