G. M. ROBBINS.

AEROPLANE, HYDROPLANE, AND THE LIKE.

APPLICATION FILED AUG. 31, 1917.

1,269,645.

Patented June 18, 1918.

3 SHEETS—SHEET 1.

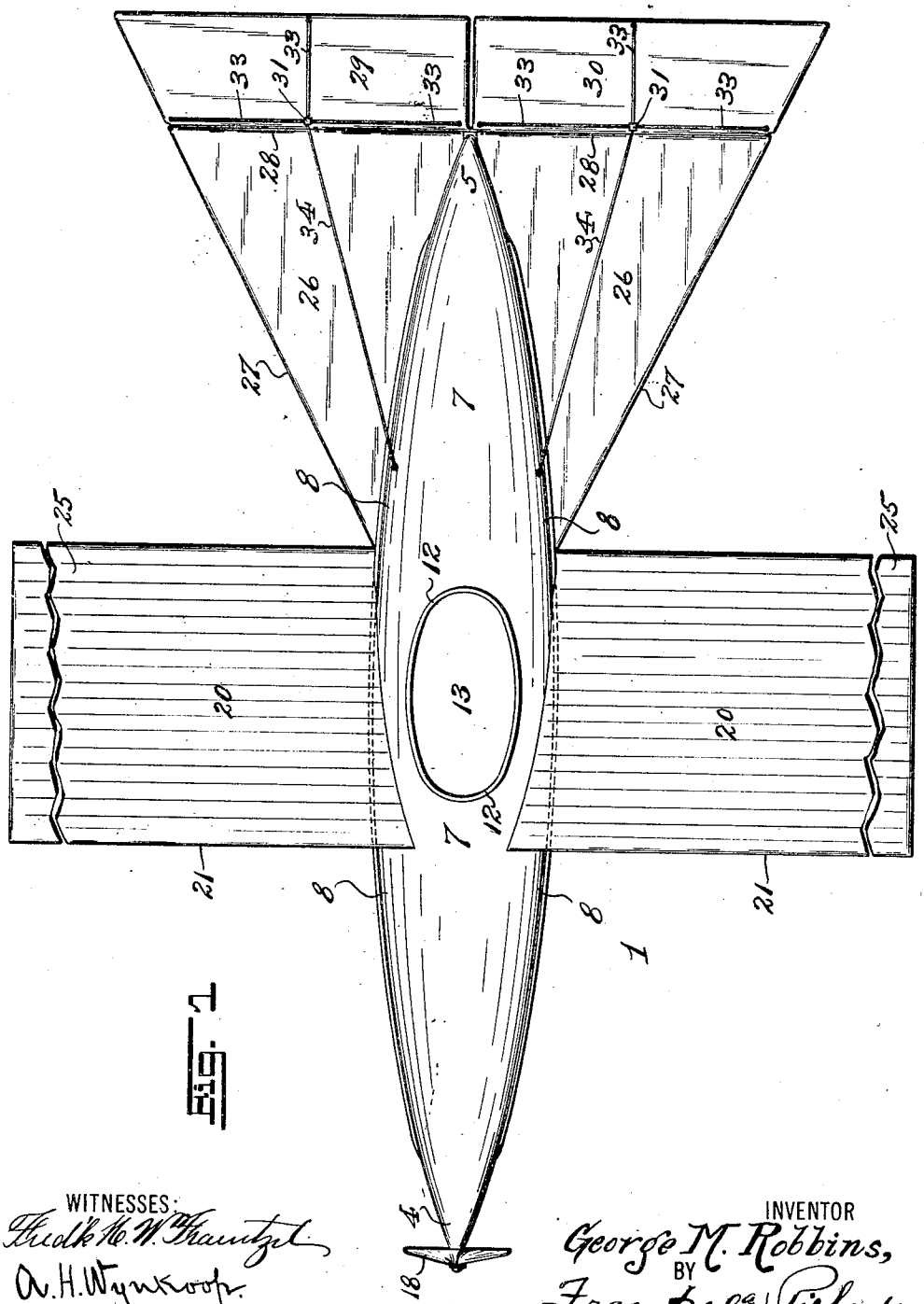

Fig. 1

WITNESSES:

Fredk. W. Frantzen

A. H. Wyncoop.

INVENTOR

George M. Robbins,

BY

Frantzen & Richards,

ATTORNEYS

G. M. ROBBINS.

AEROPLANE, HYDROPLANE, AND THE LIKE.

APPLICATION FILED AUG. 31, 1917.

1,269,645.

Patented June 18, 1918.

3 SHEETS—SHEET 2.

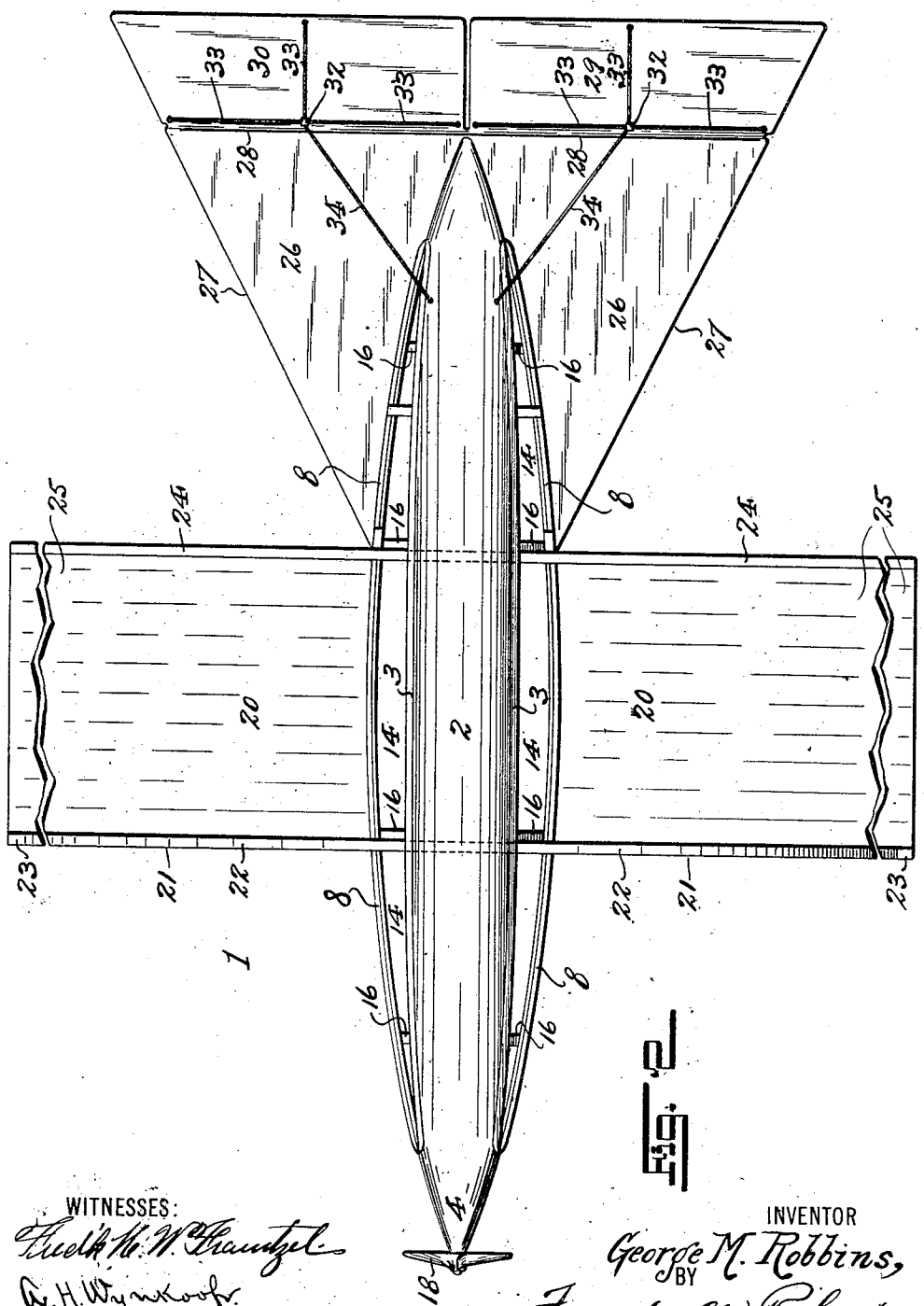

Fig. 2.

WITNESSES:

Fred'k W. Wm. Frantzel

C. H. Wynkoop.

INVENTOR

George M. Robbins,

BY

Frantzel and Richards

ATTORNEYS.

G. M. ROBBINS.

AEROPLANE, HYDROPLANE, AND THE LIKE.

APPLICATION FILED AUG. 31, 1917.

1,269,645.

Patented June 18, 1918.

3 SHEETS—SHEET 3.

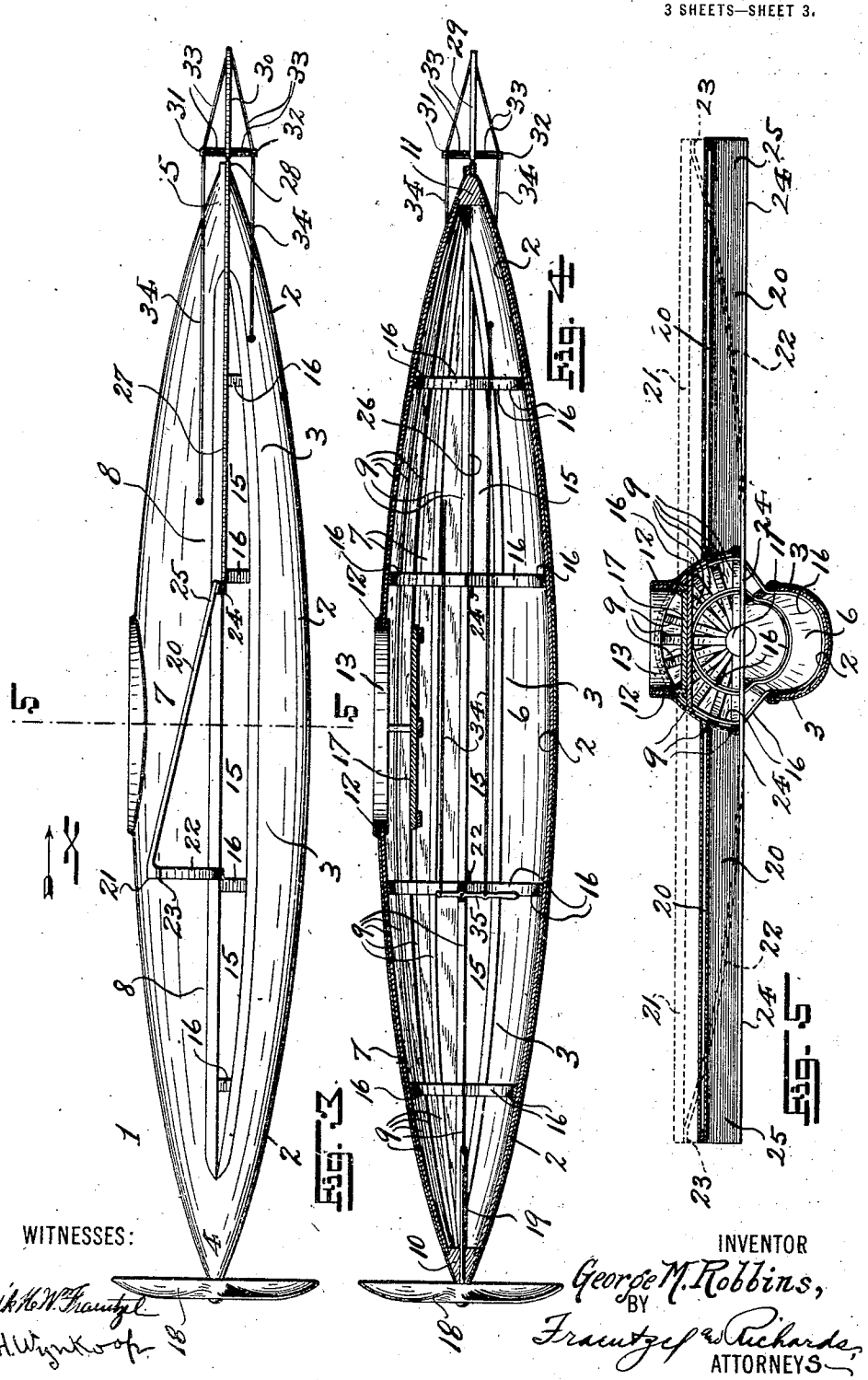

WITNESSES:

Fredk. H. W. Frantzel

A. H. Wyngkoop

INVENTOR

George M. Robbins,

BY

Frantzel & Richards,

ATTORNEYS.

UNITED STATES PATENT OFFICE.

GEORGE M. ROBBINS, OF NEWARK, NEW JERSEY.

AEROPLANE, HYDROPLANE, AND THE LIKE.

1,269,645. Specification of Letters Patent. Patented June 18, 1918.

Application filed August 31, 1917. Serial No. 189,052.

To all whom it may concern:

Be it known that I, GEORGE M. ROBBINS, a citizen of the United States, residing at Newark, in the county of Essex and State of New Jersey, have invented certain new and useful Improvements in Aeroplanes, Hydroplanes, and the like; and I do hereby declare the following to be a full, clear, and exact description of the invention, such as will enable others skilled in the art to which it appertains to make and use the same, reference being had to the accompanying drawings, and to characters of reference marked thereon, which form a part of this specification.

The present invention has reference, generally, to improvements in aeroplanes, hydroplanes, and the like; and the invention relates, more particularly, to an improved construction of body, sustaining planes and steering planes, said body being provided with a novel construction and arrangement of permanent parachute-like structure adapted to provide a safety device in the event the aeroplane or the like becomes disabled during flight.

The invention has for its principal object to provide a novel construction of body for aeroplanes and the like, which is provided with a novel arrangement of parachute-like structure built into the body as a permanent part thereof, and so arranged as to provide a certain degree of buoyancy to said body in the event of accident, so as to resist the pull of gravity, and cause the aeroplane, or the like, to descend to the ground with less danger of the destruction of the same and injury to its occupants.

Other objects of the present invention are to provide, in connection with a body of the kind above referred to, a novel arrangement and combination of sustaining planes and steering planes.

Other objects of the present invention, not at this time more particularly enumerated, will be clearly understood from the following detailed description of the same.

With the various objects of my present invention in view, the same consists, primarily, in the novel construction of aeroplane and the like, hereinafter set forth; and the invention consists, furthermore, in the novel arrangements and combinations of the various devices and parts, as well as in the details of the construction of said devices and parts, all of which will be more fully described in the following specification, and then finally embodied in the claims appended thereto.

The invention is clearly illustrated in the accompanying drawings, in which:—

Figure 1 is a top or plan view of the novel construction of aeroplane, and the like, made according to and embodying the principles of my present invention; Fig. 2 is a bottom view of the same; Fig. 3 is a side elevation of the same; Fig. 4 is a longitudinal central vertical section through the same; and Fig. 5 is a lateral cross section through the same, taken on line 5—5 in said Fig. 3, looking in the direction of the arrow *x*.

Similar characters of reference are employed in all of the hereinabove described views to indicate corresponding parts.

Referring now to the said drawings, the reference character 1 indicates the complete aeroplane structure made according to and embodying the principles of my invention, the same comprising an elongated substantially cigar-shaped body portion. This body-portion comprises, essentially, an upper hemisphere and an under hemisphere. The under hemisphere consists of an elongated boat-shaped body-proper 2, having sides 3 which merge into the nose 4 and stern-point 5 of the complete structure. This body-proper 2 provides an interior carrying-space 6 in which the engine of the aeroplane is installed, and in which the pilot sits to operate the controls. This body-proper 2 may be constructed of any suitable material, and in cases where the air-craft, of which it forms a part, is to be constructed to serve as a hydroplane, the same is rendered water-tight. The upper hemisphere consists of a parachute-like structure or dome 7, having sides 8 which merge into the nose 4 and stern-point 5 of the complete structure. This parachute-like structure 7 comprises a plurality of longitudinally extending outwardly bowed ribs 9, which are fixed to the nose-block 10 and stern-block 11, the latter portions being rigidly connected with the body-proper at the bow and stern thereof respectively. Stretched over the frame-work thus provided by said ribs 9 is a covering of suitable fabric forming the body 7 and sides 8 of said parachute-like structure. Set into the frame-work

formed by said ribs 9, so as to be centrally located with reference to said parachute-like structure, is an annular frame-piece 12 which bounds an air-escape opening 13 at the top of said parachute-like structure, the fabric-covering being secured to said frame-piece 12 so as to leave open the interior space bounded thereby. The sides 8 of said parachute-like structure are spaced apart laterally a greater distance amid-ships than the sides 3 of the body-proper 2 are distanced, consequently the former overhang and are outwardly spaced from the latter so as to provide at each side of the structure, in a horizontal plane, longitudinally extending openings 14 through which air may rush upward into the interior of said parachute-like structure. The sides 3 of the body-proper 2 are also given a slight downwardly bowed longitudinal curve whereby longitudinally extending openings 15, in a vertical plane, are provided through which the occupants of the air-craft may obtain outward vision. In order to rigidly brace the parachute-like structure in connection with the body-proper, I provide, in desired longitudinally spaced relation, a plurality of transverse annular ribs or braces 16, which are secured in supporting relation to the ribs 9 by their upper portions, and are secured to the body-proper 2 by their lower-portions.

When desired a platform 17 may be secured to the frame-work of said parachute-like structure beneath the air-escape opening 13, and upon which a suitable gun, and operator therefor, may be mounted to extend outwardly through said opening 13, when the air-craft is used for war purposes.

A suitable propeller 18 is mounted at the nose 4 of the air-craft, so that the driving shaft 19 thereof extends rearwardly through the nose-block 10 into the interior of the body-proper 2, where it is operatively connected with a power-engine (not shown).

Extending outwardly from each side of said parachute-like structure is a laterally disposed sustaining plane 20, the same being so positioned as to possess a downward and rearward inclination from their forward edges. The forward edges 21 of said planes 20 are rigidly supported by means of a cantaliver brace-member 22, which is secured by its ends 23 to the outer ends of the forward edge 21 of said planes, the same then bowing downward to extend beneath and laterally across the sides 8 of said parachute-like structure, and in fixed relation thereto. The rearward ends of said planes 20 are secured to a transverse supporting brace 24, which extends beneath and laterally across the sides 8 of said parachute-like structure, and in fixed relation thereto, but the free-ends of which are free and slightly flexible, whereby the lower outer corners 25 of the planes 20 are rendered slightly movable out of normal plane in either an upward or downward direction, when desired.

Supported in connection with the stern end of said parachute-like structure at each side thereof are tail-planes 26, the outer edges 27 of which incline outwardly and rearwardly to the stern-line 28 of said stern-planes. Connected in hinged relation to the stern-line 28 of said tail-planes 26 is a starboard steering-plane 29 and a port steering-plane 30, each being movable to upwardly or downwardly inclined positions independently of the other. Each steering-plane is provided with a suitably disposed upwardly extending vertical post 31 and a downwardly extending vertical post 32, from the extremities of which run the guy-wires 33 to suitable points adjacent to the peripheries of the planes, so that the same are not only rigidly braced, but so that the pull of control wires or tiller-wires 34, which are secured to said posts 31 and 32, may be operatively transmitted to the planes to effect a desired movement and positioning of the same. Preferably said control wires or tiller-wires 34 extend forwardly into the interior of the body-proper, and are there properly secured to suitable control levers 35, whereby the same may be properly manipulated by the pilot.

It will be clearly understood that the relation of the parachute-like structure to the body-proper of the aeroplane is such, that in the event the aeroplane is disabled during flight, from any cause, and starts to drop, the air will rush upwardly through the openings 14 into the interior of said parachute-like structure, thus offering a resistance to the downward pull of gravity, which will tend to steady the aeroplane and maintain the same in normal position upon an even keel; and furthermore, the air thus received within the interior of the parachute-like structure is permitted to escape more slowly through the air-escape opening 13, thus tending to prevent rocking or side-swaging of the aeroplane, and tending to permit the gradual descent of the same to the ground.

My invention, therefore, provides a novel structure of body for aeroplanes, which is qualified to increase the factor of safety, and to provide insurance against sudden and uncontrolled dropping of the same in case of disablement.

I am aware that some changes may be made in the arrangements and combinations of the various devices and parts, as well as in the details of the construction of the same, without departing from the scope of my present invention as set forth in the foregoing specification and as defined in the claims appended hereto. Hence, I do not limit my invention to the exact arrangements and combinations of the various parts

as described in the foregoing specification, nor do I confine myself to the exact details of the construction of the said parts as illustrated in the accompanying drawings.

I claim:—

1. In an aeroplane structure the combination with an elongated boat-like body-proper of a parachute-like structure comprising a frame-work composed of a plurality of outwardly bowed ribs fixed to and extending between the bow and stern of said body-proper, an annular frame-piece providing an air escape opening fixed in the top of said frame-work intermediate of its ends, transverse annular braces interconnecting said ribs with said body-proper, a covering supported by said frame-work, and the side marginal edge of said frame-work being spaced laterally outward from the side marginal edges of said body-proper to provide side openings through which air may rush upwardly into the interior of said parachute-like structure.

2. In an aeroplane structure the combination with an elongated boat-like body-proper of a parachute-like structure comprising a frame-work composed of a plurality of outwardly bowed ribs fixed to and extending between the bow and stern of said body-proper, an annular frame-piece providing an air escape opening fixed in the top of said frame-work intermediate of its ends, transverse annular braces interconnecting said ribs with said body-proper, a covering supported by said frame-work, the side marginal edges of said frame-work being spaced laterally outward from the side marginal edges of said body-proper to provide side openings through which air may rush upwardly into the interior of said parachute-like structure, laterally extending sustaining planes connected with said parachute-like structure, tail-planes at the stern end of said parachute plane and steering planes hinged to the rear-edge of said tail-plane.

3. In an aeroplane structure a substantially cigar-shaped body, the lower half of which constitutes a boat-like body-proper, and the upper half of which constitutes a parachute-like structure, the sides of said parachute-like structure flaring outwardly beyond the sides of said boat-like body-proper to provide longitudinal side openings in horizontal plane through which air may rush upwardly into the interior of said parachute-like structure, and means providing an air escape opening in the upper wall of said parachute-like structure.

4. In an aeroplane structure a substantially cigar-shaped body, the lower half of which constitutes a boat-like body-proper, and the upper half of which constitutes a parachute-like structure, the sides of said parachute-like structure flaring outwardly intermediate of the bow and stern beyond the sides of said boat-like body-proper to provide longitudinal side openings in horizontal plane through which air may rush upwardly into the interior of said parachute-like structure, and the sides of said boat-like body proper curving downwardly intermediate of the bow and stern to provide longitudinal side openings in vertical plane through which outward vision from the interior of said body-proper may be had.

5. In an aeroplane structure a substantially cigar-shaped body, the lower half of which constitutes a boat-like body-proper, and the upper half of which constitutes a parachute-like structure, the sides of said parachute-like structure flaring outwardly intermediate of the bow and stern beyond the sides of said boat-like body-proper to provide longitudinal side openings in horizontal plane through which air may rush upwardly into the interior of said parachute-like structure, and the sides of said boat-like body-proper curving downwardly intermediate of the bow and stern to provide longitudinal side openings in vertical plane through which outward vision from the interior of said body-proper may be had, and means providing an air escape opening in the upper wall of said parachute-like structure.

6. In an aeroplane structure a substantially cigar-shaped body, the lower half of which constitutes a boat-like body-proper, and the upper half of which constitutes a parachute-like structure, the sides of said parachute-like structure flaring outwardly intermediate of the bow and stern beyond the sides of said boat-like body proper to provide longitudinal side openings in horizontal plane through which air may rush upwardly into the interior of said parachute-like structure, and the sides of said boat-like body-proper curving downwardly intermediate of the bow and stern to provide longitudinal side openings in vertical plane through which outward vision from the interior of said body-proper may be had, means providing an air escape opening in the upper wall of said parachute-like structure, laterally extending sustaining planes connected with said parachute-like structure, tail-planes at the stern end of said parachute-like structure, and a starboard and port steering-plane hinged to the rear-edge of said tail-plane.

7. In an aeroplane structure a substantially cigar-shaped body, the lower half of which constitutes a boat-like body-proper, and the upper half of which constitutes a parachute-like structure, the sides of said parachute-like structure flaring outwardly intermediate of the bow and stern beyond the sides of said boat-like body-proper to provide longitudinal side openings in horizontal

plane through which air may rush upwardly into the interior of said parachute-like structure, and the sides of said boat-like body-proper curving downwardly intermediate of the bow and stern to provide longitudinal side openings in vertical plane through which outward vision from the interior of said body-proper may be had, laterally extending sustaining planes connected with said parachute-like structure, tail-planes at the stern end of said parachute-like structure, and a starboard and port steering-plane hinged to the rear-edge of said tail-plane.

8. In an aeroplane structure the combination with an elongated boat-like body-proper of a parachute-like structure joining the bow and stern portions of the body-proper so as to extend longitudinally above the latter, said parachute-like structure being wider in the beam than said body-proper to provide side openings through which air may rush upwardly into the interior of said parachute-like structure, said parachute-like structure having an opening in its upper portion through which the air may escape upwardly and outwardly from the interior of said parachute-like structure, laterally extending sustaining planes connected with said parachute-like structure, the same inclining slightly downward from their forward edges rearward, cantaliver braces for stiffening and holding rigid the forward edges of said planes, braces for supporting the rear edges of said planes, said braces being free to flex vertically at their outer ends whereby the outer rearward corners of said planes may be warped upwardly or downwardly out of normal plane, tail-planes extending outwardly from each side at the stern end of said parachute-like structure, and an independently movable starboard and port steering plane hinged to the rear edges of said tail-planes.

9. In an aeroplane structure the combination with an elongated boat-like body-proper of a parachute-like structure comprising a frame-work composed of a plurality of outwardly bowed ribs fixed to and extending between the bow and stern of said body-proper, an annular frame-piece providing an air escape opening fixed in the top of said frame-work intermediate of its ends, transverse annular braces interconnecting said ribs with said body-proper, a covering supported by said frame-work, the side marginal edges of said frame-work being spaced laterally outward from the side marginal edges of said body-proper to provide side openings through which air may rush upwardly into the interior of said parachute-like structure, laterally extending sustaining planes connected with said parachute-like structure, the same inclining slightly downward from their forward edges rearward, cantaliver braces for stiffening and holding rigid the forward edges of said planes, braces for supporting the rear edges of said planes, said braces being free to flex vertically at their outer ends whereby the outer rearward corners of said planes may be warped upward or downward out of normal plane, tail-planes extending outwardly from each side at the stern end of said parachute-like structure, and an independently movable starboard and port steering plane hinged to the rear edges of said tail-planes.

10. In an aeroplane structure a substantially cigar-shaped body, the lower half of which constitutes a boat-like body-proper, and the upper half of which constitutes a parachute-like structure, the sides of said parachute-like structure flaring outwardly beyond the sides of said boat-like body-proper to provide longitudinal side openings through which air may rush upwardly into the interior of said parachute-like structure, laterally extending sustaining planes connected with said parachute-like structure, the same inclining slightly downward from their forward edges rearward, cantaliver braces for stiffening and holding rigid the forward edges of said planes, braces for supporting the rear edges of said planes, said braces being free to flex vertically at their outer ends whereby the outer rearward corners of said planes may be warped upward or downward out of normal plane, tail-planes extending outwardly from each side at the stern end of said parachute-like structure, and an independently movable starboard and port steering plane hinged to the rear-edges of said tail-planes.

11. In an aeroplane structure a substantially cigar-shaped body, the lower half of which constitutes a boat-like body-proper, and the upper half of which constitutes a parachute-like structure, the sides of said parachute-like structure flaring outwardly beyond the sides of said boat-like body-proper to provide longitudinal side openings through which air may rush upwardly into the interior of said parachute-like structure, means providing an air escape opening in the upper wall of said parachute-like structure, laterally extending sustaining planes connected with said parachute-like structure, the same inclining slightly downward from their forward edges rearward, cantaliver braces for stiffening and holding rigid the forward edges of said planes, braces for supporting the rear edges of said planes, said braces being free to flex vertically at their outer ends whereby the outer rearward corners of said planes may be warped upward or downward out of normal plane, tail-planes extending outwardly from each side at the stern end of said parachute-like structure, and an independently movable starboard and port steering plane hinged to the rear edges of said tail-planes.

12. In an aeroplane structure a substantially cigar-shaped body, the lower half of which constitutes a boat-like body-proper, and the upper half of which constitutes a parachute-like structure, the sides of said parachute-like structure flaring outwardly intermediate of the bow and stern beyond the sides of said boat-like body-proper to provide longitudinal side openings in horizontal plane through which air may rush upwardly into the interior of said parachute-like structure, and the sides of said boat-like body-proper curving downwardly intermediate of the bow and stern to provide longitudinal side openings in vertical plane through which outward vision from the interior of said body-proper may be had, laterally extending sustaining planes connected with said parachute-like structure, the same inclining slightly downward from their forward edges rearward, cantaliver braces for stiffening and holding rigid the forward edges of said planes, braces for supporting the rear edges of said planes, said braces being free to flex vertically at their outer ends whereby the outer rearward corners of said planes may be warped upward or downward out of normal plane, tail-planes extending outwardly from each side at the stern end of said parachute-like structure, and an independently movable starboard and port steering plane hinged to the rear edges of said tail-planes.

13. In an aeroplane structure a substantially cigar-shaped body, the lower half of which constitutes a boat-like body-proper, and the upper half of which constitutes a parachute-like structure, the sides of said parachute-like structure flaring outwardly intermediate of the bow and stern beyond the sides of said boat-like body-proper to provide longitudinal side openings in horizontal plane through which air may rush upwardly into the interior of said parachute-like structure, and the sides of said boat-like body-proper curving downwardly intermediate of the bow and stern to provide longitudinal side openings in vertical plane through which outward vision from the interior of said body-proper may be had, means providing an air escape opening in the upper wall of said parachute-like structure, laterally extending sustaining planes connected with said parachute-like structure, the same inclining slightly downward from their forward edges rearward, cantaliver braces for stiffening and holding rigid the forward edges of said planes, braces for supporting the rear edges of said planes, said braces being free to flex vertically at their outer ends whereby the outer rearward corners of said planes may be warped upward or downward out of normal plane, tail-planes extending outwardly from each side at the stern end of said parachute-like structure, and an independently movable starboard and port steering plane hinged to the rear-edges of said tail-planes.

In testimony, that I claim the invention set forth above I have hereunto set my hand this 27th day of August, 1917.

GEORGE M. ROBBINS.

Witnesses:
FREDK. C. FRAENTZEL,
FREDK. H. W. FRAENTZEL.