PCT

WORLD INTELLECTUAL PROPERTY ORGANIZATION
International Bureau

INTERNATIONAL APPLICATION PUBLISHED UNDER THE PATENT COOPERATION TREATY (PCT)

(51) International Patent Classification 6 : G06F 15/18

A1

(11) International Publication Number: WO 98/28696

(43) International Publication Date: 2 July 1998 (02.07.98)

(21) International Application Number: PCT/IL97/00419

(22) International Filing Date: 22 December 1997 (22.12.97)

(30) Priority Data:
08/772,801 24 December 1996 (24.12.96) US

(71) Applicant: CORRELATE TECHNOLOGIES LTD. [IL/IL]; Bezalel Street 15, 52521 Ramat Gan (IL).

(72) Inventor: DIAMENT, Theodore, M.; 148 Wellington Avenue, New Rochelle, NY 10804 (US).

(74) Agents: COLB Sanford, T. et al.; Sanford T. Colb & Co., P.O. Box 2273, 76122 Rehovot (IL).

(81) Designated States: AL, AM, AT, AT (Utility model), AU, AZ, BA, BB, BG, BR, BY, CA, CH, CN, CU, CZ, CZ (Utility model), DE, DE (Utility model), DK, DK (Utility model), EE, EE (Utility model), ES, FI, FI (Utility model), GB, GE, GH, GM, GW, HU, ID, IL, IS, JP, KE, KG, KP, KR, KZ, LC, LK, LR, LS, LT, LU, LV, MD, MG, MK, MN, MW, MX, NO, NZ, PL, PT, RO, RU, SD, SE, SG, SI, SK, SK (Utility model), SL, TJ, TM, TR, TT, UA, UG, UZ, VN, YU, ZW, ARIPO patent (GH, GM, KE, LS, MW, SD, SZ, UG, ZW), Eurasian patent (AM, AZ, BY, KG, KZ, MD, RU, TJ, TM), European patent (AT, BE, CH, DE, DK, ES, FI, FR, GB, GR, IE, IT, LU, MC, NL, PT, SE), OAPI patent (BF, BJ, CF, CG, CI, CM, GA, GN, ML, MR, NE, SN, TD, TG).

Published
With international search report.
Before the expiration of the time limit for amending the claims and to be republished in the event of the receipt of amendments.

(54) Title: COMPUTER SOFTWARE AND USER INTERFACE FOR INFORMATION MANAGEMENT

(57) Abstract

Computer software and a user interface for information management are provided in which semantic networks may be entered and analyzed. The user interface for entry of the semantic network uses a windows environment to enter the nodes and the arcs connecting the nodes. Arcs may serve as sources or destinations for other arcs. The software includes a first data structure relating to the structure of the semantic network and a second data structure relating to the display of the semantic network. Additional data structures may be used to show the semantic network in group, table, and other forms. Two illustrative applications are described for Internet Management and Resource Management.

FOR THE PURPOSES OF INFORMATION ONLY

Codes used to identify States party to the PCT on the front pages of pamphlets publishing international applications under the PCT.

AL	Albania	**ES**	Spain	**LS**	Lesotho	**SI**	Slovenia
AM	Armenia	**FI**	Finland	**LT**	Lithuania	**SK**	Slovakia
AT	Austria	**FR**	France	**LU**	Luxembourg	**SN**	Senegal
AU	Australia	**GA**	Gabon	**LV**	Latvia	**SZ**	Swaziland
AZ	Azerbaijan	**GB**	United Kingdom	**MC**	Monaco	**TD**	Chad
BA	Bosnia and Herzegovina	**GE**	Georgia	**MD**	Republic of Moldova	**TG**	Togo
BB	Barbados	**GH**	Ghana	**MG**	Madagascar	**TJ**	Tajikistan
BE	Belgium	**GN**	Guinea	**MK**	The former Yugoslav Republic of Macedonia	**TM**	Turkmenistan
BF	Burkina Faso	**GR**	Greece			**TR**	Turkey
BG	Bulgaria	**HU**	Hungary	**ML**	Mali	**TT**	Trinidad and Tobago
BJ	Benin	**IE**	Ireland	**MN**	Mongolia	**UA**	Ukraine
BR	Brazil	**IL**	Israel	**MR**	Mauritania	**UG**	Uganda
BY	Belarus	**IS**	Iceland	**MW**	Malawi	**US**	United States of America
CA	Canada	**IT**	Italy	**MX**	Mexico	**UZ**	Uzbekistan
CF	Central African Republic	**JP**	Japan	**NE**	Niger	**VN**	Viet Nam
CG	Congo	**KE**	Kenya	**NL**	Netherlands	**YU**	Yugoslavia
CH	Switzerland	**KG**	Kyrgyzstan	**NO**	Norway	**ZW**	Zimbabwe
CI	Côte d'Ivoire	**KP**	Democratic People's Republic of Korea	**NZ**	New Zealand		
CM	Cameroon			**PL**	Poland		
CN	China	**KR**	Republic of Korea	**PT**	Portugal		
CU	Cuba	**KZ**	Kazakstan	**RO**	Romania		
CZ	Czech Republic	**LC**	Saint Lucia	**RU**	Russian Federation		
DE	Germany	**LI**	Liechtenstein	**SD**	Sudan		
DK	Denmark	**LK**	Sri Lanka	**SE**	Sweden		
EE	Estonia	**LR**	Liberia	**SG**	Singapore		

COMPUTER SOFTWARE AND USER INTERFACE FOR INFORMATION MANAGEMENT

FIELD OF THE INVENTION

This invention relates to computer software and user interfaces for information management. An apparatus and method are disclosed for entering and managing information on a computer system using a natural user interface.

BACKGROUND OF THE INVENTION

Computer software exists for many applications. Suites of office applications, by Microsoft, Lotus, Corel and others, are available for use with computers and are often bundled with the sale of a computer. Such office suites generally include software for word processing, graphic, spreadsheet and database applications. In Microsoft Office, these computer programs include Word, PowerPoint, Excel and Access.

In general, an office suite includes two types of computer programs. A first type of software includes word processing and graphic programs, which allow a user to enter information and present it in a visually pleasing manner. Typically, such programs allow a user to present information in a variety of forms without extensive training or specialized knowledge of the software program. These programs, though, are limited to providing data formatting functions and do not permit analysis of the data entered. A second type of software includes spreadsheet and database programs, which allow a user to enter information that may be analyzed. While this type of software permits the creation of lists, reports, charts, tables, graphs and other forms of output, the use of such programs generally requires training and specialized knowledge of the software program.

In summary, neither word processing programs nor database programs provide a means for a novice computer user to enter, manage, and analyze information on a computer system using a natural user interface. On the one hand, word processing programs provide a way to present information in a visually pleasing manner, but do not allow a user to do something with the information other than view it. On the other hand, database programs allow information to be analyzed, but require special training to make them useful. When a novice computer user wants to start from an empty canvas, and identify and analyze information, he or she still reaches for a pen and pad

of paper. Even experienced computer users reach for a pen and pad of paper when they first commence thinking about a problem, but have not yet generated or identified enough information to make worthwhile the creation of a spreadsheet or database.

When using pen and paper, many have turned to the concept of a semantic network to organize their thoughts. A semantic network is a knowledge representation paradigm that has been the subject of research in artificial intelligence since the 1960's. The idea is that knowledge consists of objects and their relationships to each other. The objects are represented by nodes and the relationships are represented by labeled arcs between the nodes. On paper, semantic network are often represented as a number of data-containing nodes as objects, with labeled arcs linking related nodes.

As an alternative to traditional word processing and database programs, there have been prior attempts to provide computer software for the creation of semantic networks. The computer software product known as InfoCentral, which was first marketed by WordPerfect, is one such attempt. In the InfoCentral product, a user creates what is known in that program as an "intelligence base" or "iBase" for a certain topic. To build an iBase, a user first selects the "add" function to add an object to the iBase. The user then enters the name of the object and is prompted for a category to which to assign the object. Default categories include person, organization, place and event. The user then adds additional objects to the iBase. After there are at least two objects in an iBase, the user may add connections between objects using the "connect" function. The user may define connection types or select from default connection types. For example, an employee connection could be used to connect a person and an organization, or a friend connection could be used to connect two people. After data has been entered, the InfoCentral product provides limited features for viewing the data and creating files related to the data for use with other computer software programs.

The InfoCentral product is limited in at least five significant respects. First, the natural feeling of pen and paper is totally absent from the InfoCentral user interface. Instead of allowing the user to enter information on a blank window, "add" and "connect" buttons, which call separate pop-up text windows, are used to enter object names, object types, and connection types. Second, a user must know something about his or her topic before using the software program. In an InfoCentral iBase, a

user is prevented from entering information without also assigning relationship information at its time of entry, because each object must be assigned an object category and each connection a connection type at the time such information is entered. Third, the InfoCentral product displays information in a controlled and rigid format. InfoCentral does not allow a user to organize information contained in a semantic network into summary list boxes and tables with the click of a mouse button. Fourth, because InfoCentral does not have the ability to display information in list boxes and tables, it is not possible to query such data structures to provide an information management system. Fifth, InfoCentral does not permit arcs in a semantic network to be used as sources or destinations for new arcs. Rather, InfoCentral follows strict rules for the creation of semantic networks in which arcs may only be used to connect nodes.

SUMMARY OF THE INVENTION

The present invention is a new type of computer software and user interface. This software and its user interface overcome the limitations of the prior art to provide a system for entering and managing information on a computer using a natural user interface. Like word processing and graphic programs, the software allows the entry and display of information in a flexible format. Like spreadsheet and database programs, the software allows information to be manipulated and query operations to be performed. However, unlike previous attempts to merge these qualities in a single software application, the software provides a natural user interface similar to pen and paper, yet does not require prior knowledge about a topic or extensive user training to be a valuable tool for information management.

The present invention accomplishes these goals by providing a user with a blank sheet for data input, which is represented as an empty window on the computer display. The user selects any portion of the empty window for inputting an object, which can be any type of data or information. Additional objects may be entered in other portions of the window. When the user discovers that two or more pieces of information are related, the related items may be connected with labeled arcs or links. Alternatively,

where the user wants to add directly to the window information that relates to an object or an arc already on the window, the new object and a new labeled arc may be added at the same time. The software provides for viewing the data and structures related to the data, including list boxes and tables. The software provides for querying these advanced structures and for creating files related to the data for use with other computer software programs.

The software is designed to enable the efficient input, storage, manipulation, extraction and analysis of loosely structured and unstructured data. Unlike database systems which require that data first be organized in tables, records and fields, the software allows the user to enter data without contemplating an overall structure and without forcing the data entry to conform to predetermined categories. Data is captured as it is discovered or generated in the course of business, and a structure for the data emerges naturally as an incident of data entry. Because it does not demand a rigid structuring of data, the software brings the power of database searching and analysis to domains where the nature and scope of information generated may be unpredictable in advance of its discovery or production.

DESCRIPTION OF THE FIGURES

The foregoing advantages of the present invention are apparent from the following detailed description of the invention with reference to the drawings, in which:

FIG. 1 shows an illustrative computer system;

FIG. 2 shows a block diagram of the components of the computer system;

FIG. 3 shows a semantic network and screen displays relating to the network;

FIG. 4 shows the entry of a semantic network;

FIG. 5 shows advanced options available for viewing semantic networks;

FIG. 6 shows data structures used in the software;

FIG. 7 shows structures used in rendering or displaying a web;

FIG. 8 shows an application of the invention for Internet Management;

FIG. 9 shows an application of the invention for Resource Management; and

FIG. 10 shows detailed screen displays for the user interface.

DESCRIPTION OF THE PREFERRED EMBODIMENT

FIG. 1 shows an illustrative computer system **100** to which the present invention applies. Computer system **100** contains data storage devices, a central processing unit, a power source, and connections for external devices. External devices typically connected to computer system **100** include one or more output devices, such as video monitor **102**, and one or more input devices, such as keyboard **104** and pointing device **106**. Computer system **100** may be any of several commercially available computer systems available from Apple, Compaq, Digital, Hewlett Packard, IBM and others. Those of ordinary skill in the art may select and implement the present invention on other computer systems.

FIG. 2 shows a block diagram of the components of a computer system to which the present invention applies. Central processing unit **200** contains one or more microprocessors for executing the computer software programs necessary to implement the present invention. Central processing unit **200** is typically connected to primary storage **202** and system bus **204**. Primary storage **202** is typically volatile storage, such as RAM. The programs and data for implementing the present invention are stored on a temporary basis in primary storage **202** during execution. Typically, only a portion of the programs and data fit in primary storage **202** at any particular time. Cache memory may also be included with central processing unit **200** or primary storage **202** to speed program execution.

System bus **204** connects the components of the computer system, and may be based on an open architecture, such as Peripheral Component Interconnect (PCI), or on a proprietary design. Several devices are connected to system bus **206**. Secondary storage **206** is typically nonvolatile storage, such as an optical or magnetic disk drive. The programs and data for implementing the present invention are stored on a

permanent basis in secondary storage **206**. Input device **208** may include keyboard **104** or pointing device **106**, and output device **210** may include video monitor **102**. In some computer systems, input device **208** and output device **210** are connected directly to central processing unit **200**, rather than through system bus **204**.

FIG. 3 shows a semantic network and renderings relating to the network. FIG. 3A shows a semantic network for objects and relationships in the town of Bedrock, as popularized by the cartoon, The Flintstones. (The Flintstones show, characters, and marks are the property of Hanna-Barbera, and are used herein for illustration purposes only.) FIG. 3A shows information as it might be written on paper. Using the software of the present invention, the same information may be entered into a computer and displayed as the web shown in FIG. 3B. Using the software, this and similar information may be manipulated to produce the modified webs shown in FIGs. 3C-3H. In FIG. 3C, Fred node **300** is collapsed, so that the information associated with Fred is not displayed. In FIG. 3D, friend node **302** is grouped, so that the names of Wilma's friends are grouped into friend list box **304** and their collective phone numbers are grouped into phone list box **306**. FIG. 3E shows the web from FIG. 3D where the phone numbers associated with one of Wilma's friends, Sharon Stone, are selectively grouped into phone list box **308**. FIG. 3F shows a variation of the web, where Bedrock node **310** and citizen arcs **312**, **314**, and **316** are added. This figure links Fred, Betty, and Wilma as citizens of Bedrock. FIG. 3G shows the data from FIG. 3F grouped into table **320**. FIG. 3H shows data grouped into chart **322** to reflect banana consumption and sleep patterns for Wilma, Barney, and Fred.

The user interface of the present invention is graphical in nature, and it is necessary to implement the invention in a computer environment that supports graphic windows. The present invention has been implemented in the Microsoft Windows 95 operating system environment, but other operating systems may be used. These other operating systems include Apple's Macintosh O/S, Microsoft's other windows-based

operating systems, IBM's OS2, XWindow environments for UNIX computers, and any other operating system that supports graphic windows, including an "applet" or application implemented to run in a World Wide Web browser.

The entry of a semantic network using the inventive user interface is shown in FIG. 4. FIG. 4A shows window **400**, which is a blank sheet presented to the user for data input. Window **400** includes optional scroll bars at the right **402** and at the bottom **404** of the window, which are used to move to undisplayed portions of the window. Window **400** also includes optional resize box **406**, which is used to change the size of the displayed window. Cursor **408** is used to enter information, and is typically displayed by clicking a button on pointing device **106** when the operating system's pointer is within any portion of window **400**. Scroll bars **402** and **404**, resize box **406**, and cursor **408** all function in an ordinary windows-type way.

FIG. 4B shows the window from FIG. 4A after the user has entered object **410**. In the present example, object **410** is text information shown as "Fred" in FIG. 4B. Such text information is typically entered through keyboard **104**, but other methods of entry may be used. Although text objects are used in this example, objects include all types of information and data that are recognized by the computer environment on which the software resides. For example, with Microsoft Windows 95, objects include text data, picture data, Internet links, files, and other items. Button **412** is associated with object **410**. In FIG. 4B, button **412** is shown as an empty button, because object **410** has no descendants.

FIG. 4C shows the window from FIG. 4B after the user has added object **414** and has begun the process of connecting objects **410** and **414**. Object **414** is text information shown as "Barney", and the object also includes button **416**. To connect objects **410** and **414**, the user clicks on button **412** associated with object **410** and drags line **418** to button **416** or anywhere else in the rectangular region occupied by object **414**. When the end of line **418** is anywhere over object **414** or button **416**, the

user releases the mouse button to establish the connection. The first item selected is the parent, and the second item to which line **418** is dragged is the destination of the descendant arc. The software redraws the window with Barney object **414** beneath Fred object **410**, as shown in FIG. 4D. The software positions cursor **408** next to button **420**, where the user may optionally label the arc between objects **410** and **414**, or leave the arc label blank for future input. Button **412** is updated to include a minus sign. Following the convention used in Microsoft's operating systems, inclusion of a minus sign in a button indicates that descendants of an object are shown. A plus sign in a button indicates that descendants of an item exist, but that they are not shown. A display consisting solely of Fred object **410** with button **412** including a plus sign could be generated by clicking on button **412**. Clicking again on button **412** regenerates the display shown in FIG. 4D. An empty button indicates that there are no descendants associated with the item to which the button pertains.

FIG. 4E shows the window from FIG. 4D after arc information has been associated with button **420**. Arc **422** includes the text information shown as "friend", which denotes that Fred and Barney are friends. FIG. 4E also shows how to enter a new arc and a new object in one operation. This is done by clicking on button **412** associated with object **410**; dragging line **418** to any empty portion of the window; and releasing the mouse button. The software redraws the window with button **424** for a new arc and button **426** for a new object, as shown in FIG. 4F. The software positions cursor **408** next to button **424** for entry of the new arc information. FIG. 4F shows that object buttons are connected as part of the web, while arc buttons are placed near, but not connected to the web. This is not critical, however, and other configurations and spacings of object and arc buttons are anticipated. FIG. 4G shows the window from FIG. 4F with the new arc data "friend" at **428** and the new object data "Betty" at **430**. FIG. 4H shows an advanced display option for the semantic network shown in FIG. 4F,

in which Fred's friends have been grouped together into friend list box **432** under friend arc **434**.

FIG. 5 shows advanced options available for viewing semantic networks. FIG. 5A shows an illustrative semantic network, as entered into the software. The network shows a law firm consisting of three attorneys and their respective departments and clients as part of the web. FIG. 5B shows the same data as that shown in FIG. 5A in a different format. In FIG. 5B, the department and client data for each attorney have been grouped into list boxes. A user would accomplish this grouping by activating a group function through a shortcut menu, tool bar, pulldown menu, or some other way. In one implementation of the software, a user clicks the right mouse button over an arc button to obtain a shortcut menu, from which the group function is selected for the given arc. The software redraws the web with the destinations of the arc grouped into a listbox. FIG. 5B shows the semantic network from FIG. 5A after the group function has been selected for buttons **500**, **502**, **504**, **506**, **508** and **510**. To return to FIG. 5A, one would perform a complementary ungroup function on buttons **512**, **514**, **516**, **518**, **520** and **522**. Global grouping and ungrouping functions may also be provided. For example, using the group function on button **524** could perform a global group function for all descendants to arrive at the display in FIG. 5C without the need to first group at the level shown in FIG. 5B. An equivalent global ungroup function on button **542** could be used to return to the display of FIG. 5A. Other creative uses of global functions may be implemented.

To obtain FIG. 5C from FIG. 5B, one would perform a group function on any of buttons **530**, **532** or **534**. The software redraws the web with the three groupings shown in FIG. 5C for attorney, department, and client. The software then enables one to perform queries in a user-friendly and simple way. For example, FIG. 5D shows that where a particular item in the attorney listbox is selected, the department and client listboxes are redrawn to show only that attorney's department and clients. Other query

options and query results are and could be provided. For example, the software could enable the selection of multiple items in one or more list boxes, or the software could display results by highlighting search hits as an alternative to erasing search misses. FIG. 5E shows the table option available in the software. To obtain FIG. 5E, one would perform a table function, invoked in a way similar to the group function, using button **536** in FIG. 5C. The software redraws the web with table **538** shown in FIG. 5E, which collects attorney, department and client information into one object. The software could optionally generate the table in other forms, or format the table to be compatible with other software applications, such as spreadsheet and database programs. Other complex features may be implemented in the software, such as a feature for generating charts or graphs for suitable table data.

FIGs. 5F-5M show further advanced options for the display of semantic networks. FIG. 5F shows the use of web **552** embedded within web **554**. Except for system limitations, the software does not limit the nesting of further levels of embedded webs. FIGs. 5G-5H show the use of "smart arcs" with the spousal relationship between Fred and Wilma. In FIG. 5G, where Fred object **556** is the top-level object, the spouse arc to Wilma object **558** is shown as wife arc **560**. However, where the relationship is changed in FIG. 5H and Wilma object **558** is the top-level object, the spouse arc to Fred object **556** is shown as husband arc **562**. Smart arcs may be implemented that rely on the use of other conceptual pairs, including mother-daughter, father-son, employer-employee, and others.

FIGs. 5I-5M illustrate the ability of the user interface to focus on different objects of interest. FIG. 5I shows an illustrative semantic network in which the marriage of Fred and Wilma is shown, at which Barney was the best man and Betty was the maid of honor. FIG. 5J shows that, to focus on Barney object **564**, the user may drag-and-drop the Barney object to a new location to create a second copy of this object, Barney object **566**. (Alternate methods of copying Barney object **564** may be used, such as the

three-step procedure of select, copy, and paste.) FIG. 5K shows the resulting display where button **568** of Barney object **566** is a plus sign, which indicates that it has one or more descendants. By clicking on button **568**, one arrives at the display shown in FIG. 5L, which is a traversal of the semantic network shown in FIG. 5I from the perspective of Barney. From Barney's perspective, he was the best man at the marriage of Fred and Wilma. By clicking on button **570** associated with married arc **572**, the software displays the complete semantic network from the perspective of Barney, as shown in FIG. 5M.

FIG. 6 shows data structures used in one representation of the software. FIG. 6A shows a Booch diagram of the object class hierarchy, in which "Hungarian notation" is used to label each class name and member variable name. (In "Hungarian Notation", class names are prefixed with "C", while names of member variables of a class are prefixed with "m_" followed by a tag indicating their data type, e.g., "n" for number, "p" for pointer, "str" for string, "array" for array, "b" for boolean, etc.) This object class hierarchy may be implemented, for example, in the C++ programming language. Equivalent data structures could be implemented in other object-oriented programming languages or even in non-object-oriented programming languages. The key feature of the data structure is that a first data structure, such as CNode **602** in FIG. 6A, contains the underlying structure of a semantic network, while a second data structure, such as CWebNode **610** in FIG. 6A, contains information for rendering the semantic network, or drawing it on the display.

CObject **600** is the top-level object class. CNode **602** is a subclass of CObject **600** and contains underlying data pertaining to an object or arc, together with the associated data for that object or arc in a semantic network. CNode **602** includes two attributes: (i) m_pSource, a pointer to the source of this CNode; and (ii) m_pDest, a pointer to the destination of this CNode. CNode **602** has several subclasses, including CStringNode **604**, CListNode **606**, and CLayoutNode **608**. The subclasses are used

for different elements in a semantic network. CStringNode **604** is associated with text-labeled CNodes and text-labeled arcs in a semantic network. CStringNode **604** adds one attribute, a string identified as m_strTitle, which stores the text value of this CNode. CListNode **606** is associated with displaying grouped data elements, such as the list boxes and tables shown in FIGs. 5B through 5E. CListNode **606** adds one attribute, a pointer to a list of CNodes identified as m_listNodes, which stores the list of items included in a list box. The final illustrative subclass of CNode **602** is CLayoutNode **608**, which would be associated with and which would store a web embedded within a web, such as web **552** shown in FIG 5F. It is contemplated that other CNode subclasses could be used in the software, such as picture CNodes, audio CNodes, file CNodes, and World Wide Web hyperlink CNodes.

CWebNode **610** is also a subclass of CNode **602**. A CWebNode may be understood as a CNode on display, as it contains information concerning the rendering, or drawing on the display, of the CNode with which it is associated. CWebNode **610** adds six attributes to the two elements already in the CNode **602** class, including: (i) m_pNode, a pointer to the CNode associated with this CWebNode; (ii) m_pControl, a pointer to a CWebControl **626** responsible for rendering, drawing, and altering the data in the associated CNode; (iii) m_pGroup, a pointer to a CWebNode for which this CWebNode is one of one or more elements in the group; (iv) m_arrayDescendants, an array of CWebNodes, which are the descendants of this CWebNode; (v) m_pParent, a pointer to the parent of this CWebNode; and (vi) m_bGrouped, a boolean attribute used with decision logic for rendering a web. There are several subclasses of CWebNode **610**, which are used for the different types of nodes that are displayed as part of a web. Illustrative subclasses of CWebNode **610** include CStringWebNode **612**, CListWebNode **614**, CLinkListWebNode **616**, and CLayoutWebNode **618**, which are associated with strings, list boxes, and embedded webs. Other CWebNode subclasses may be used in the software as needed.

CWebControl **626** is a subclass of CObject **600**. CWebControl **626** is an abstract class responsible for rendering, displaying, and altering CNode data. It includes several subclasses for rendering, displaying, and altering specific types of data, including CWebEditControl **628** for string data, CWebListBoxControl **630** for list box data, and CWebLayoutControl **632** for embedded webs. Other CWebControl subclasses may be used in the software as needed. As part of the contents of CWebControl **626**, it is anticipated that attributes for drawing or rendering the associated CNode data will be included. For example, CWebEditControl **628** and CWebListBoxControl **630** may include color, font size, and font type for text data. For other CWebNode classes, there may be a volume control for an audio object or a scale control for a picture object. Other suitable attributes may be included.

FIG. 6B shows three standard renderings of a CWebNode. A CWebNode with no source (i.e., m_pSource = NULL) and no destination (i.e., m_pDest = NULL) would be displayed as CWebNode **620**. A CWebNode with no source (i.e., m_pSource = NULL), and having a destination (i.e., m_pDest = Dest) would be displayed as CWebNode **622**. A CWebNode having both source and destination pointers (i.e., m_pSource = Source and m_pDest = Dest) would be displayed as CWebNode **624**. All of the displays are generated from these three standard CWebNode renderings. In the drawings, for example, Fred object **410** and Barney object **414** are renderings of type CWebNode **620**; friend arc **422** and friend group arc **434** are renderings of type CWebNode **622**; and married arc **572** is a rendering of type CWebNode **624**.

The utility of the data structure of FIG. 6A is illustrated by showing how it is created for the input of FIG. 4. The drawings in FIGs. 6C-6H show the incremental creation of the data structure for the semantic network shown in FIGs. 4C-4H. In this example, there is a one-to-one correspondence between CNodes and CWebNodes; in other words, for each CNode created to hold underlying data for objects and arcs, there is a corresponding CWebNode created to hold drawing information. In general, though,

there will often be many CWebNodes pointing to the same CNode. For clarity, CNodes have even reference numerals and corresponding CWebNodes have odd reference numerals in the drawings in FIGs. 6C-6H. In addition, pointers with NULL values are not displayed; pointers are labeled from their source ends; and the values of m_strTitle and m_pGroup are not included.

When Fred object **410** is entered, two objects of class CObject are created, including Fred CStringNode **650** and Fred CStringWebNode **651**. In Fred CStringNode **650**, m_strTitle is set to "Fred", and the m_pSource and m_pDest pointers are both set to NULL. In Fred CStringWebNode **651**, the m_pSource, m_pDest, and m_pParent pointers are all set to NULL; the m_pNode pointer is set to point to Fred CStringNode **650**; the m_pControl pointer is set to point to an object of the class CWebEditControl; the m_pGroup pointer may be set to NULL or updated as described later in this disclosure; and the m_arrayDescendants array is left empty. When Barney object **414** is added, Barney CStringNode **652** and Barney CStringWebNode **653** are created, which are similar in form and content to, respectively, Fred CStringNode **650** and Fred CStringWebNode **651**.

When friend arc **422** is added, two new objects of class CObject are created and Fred CStringWebNode **651** and Barney CStringWebNode **653** are updated. The objects created are friend CStringNode **654** and friend CStringWebNode **655**. In friend CStringNode **654**, m_strTitle is set to "friend"; the m_pSource pointer is set to point to Fred CStringNode **650**; and the m_pDest pointer is set to point to Barney CStringNode **652**. The m_pSource and m_pDest pointers in friend CStringNode **654** are set in this way to reflect the status of friend as an arc in the semantic network. In friend CStringWebNode **655**, the m_pSource is set to NULL (so that the CWebNode will be displayed in the rendering style of CWebNode **622**); the m_pDest pointer is set to point to Barney CStringWebNode **653**; the m_pNode pointer is set to point to friend CStringNode **654**; the m_pControl pointer is set to point to an object of the class

CWebEditControl; the m_pGroup pointer may be set to NULL or updated as described later in this disclosure; the m_arrayDescendants array is left empty; and the m_pParent pointer is set to point to Fred CStringWebNode **651**.

When friend arc **422** is added, Fred CStringNode **650** and Barney CStringNode **652** are not changed, as both are still objects in the semantic network. Fred CStringWebNode **651** and Barney CStringWebNode **653**, however, are updated to reflect the addition of friend arc **422**, so that the semantic network may be properly rendered or displayed. Two updates (other than group updates, which are discussed in a later portion of the disclosure) are needed: (i) in Fred CStringWebNode **651**, the m_arrayDescendants array is updated to include a pointer to friend CStringWebNode **655**; and (ii) in Barney CStringWebNode **653**, the m_pParent pointer is set to point to friend CStringWebNode **655**. At this point, the data structure includes three objects of class CStringNode **604** and three objects of class CStringWebNode **612**. The three CStringNodes contain the underlying structure of the semantic network, while the three CStringWebNodes contain information to draw the web. Fred CStringWebNode **651** and Barney CStringWebNode **653** are of the form of CWebNode **620**, and friend CStringWebNode **655** is of the form of CWebNode **622**.

When friend arc **428** and Betty object **430** are added, several new objects are created and several updates are made in the existing data structures. Two new objects are created for the second friend arc, which are similar in form and content to the two objects created for the first friend arc. Two new objects are created for the Betty object, which are similar in form and content to the objects created for the Barney object. These four objects are friend CStringNode **656**, friend CStringWebNode **657**, Betty CStringNode **658**, and Betty CStringWebNode **659**. The m_arrayDescendants array in Fred CStringWebNode **651** is updated to include a pointer to the second friend arc (friend CStringWebNode **657**) in addition to the existing pointer to the first friend arc (friend CStringWebNode **655**). At this point, the data structure is complete for

displaying a basic semantic network, such as the one shown in FIG. 4G or 5A. To display more complex forms of a semantic network, such as the ones shown in FIGs. 5B-5E, group objects are created. These group objects may be created either (i) at the time arcs and objects are added to a semantic network or (ii) at the time the user requests the display of a more complex form of the semantic network.

Several new objects are created and several updates are made in the existing data structures to represent the friends group of the present example. Six objects are created, including two objects associated with friends group list box **432**, two objects associated with friends group arc **434**, and two objects associated with Fred object **436**. For friends group list box **432**, CListNode **660** and CListWebNode **661** are created. For friends group arc **434**, CListNode **662** and CLinkListWebNode **663** are created. For Fred object **436**, CListNode **664** and CListWebNode **665** are created. The attributes of the six new objects are set as follows:

(1) In friends group list box CListNode **660**, m_pSource and m_pDest point to NULL, and m_listNodes is a linked list of Barney CStringWebNode **653** and Betty CStringWebNode **659**.

(2) In friends group list box CListWebNode **661**, m_pSource, m_pDest, and m_pGroup point to NULL; m_pNode points to friends group list box CListNode **660**; m_pControl points to an object of CWebListBoxControl **630**; m_arrayDescendants is empty; and m_pParent points to friends group arc CLinkListWebNode **663**.

(3) In friends group arc CListNode **662**, m_pSource points to the Fred CListNode **664**; m_pDest points to friends group list box CListNode **660**; and m_listNodes is a linked list of the friend CStringWebNode **655** and friend CStringWebNode **657**.

(4) In friends group arc CLinkListWebNode **663**, m_pSource and m_pGroup point to NULL; m_pDest points to friends group list box CListWebNode **661**; m_pNode points to friends group arc CListNode **662**; m_pControl points to an object of type

CWebEditControl **628**; m_arrayDescendants is empty; and m_pParent points to Fred CListWebNode **665**.

(5) In Fred CListNode **664**, m_pSource and m_pDest point to NULL and m_listNodes is a linked list consisting of Fred CStringWebNode **651**.

(6) In Fred CListWebNode **665**, m_pSource, m_pDest, m_pGroup, and m_pParent point to NULL; m_pNode points to Fred CListNode **664**; m_pControl points to an object of type CWebEditControl **628**; and m_arrayDescendants is an array consisting of a pointer to friends group arc CLinkListWebNode **663**.

In addition to adding the above objects, the m_pGroup attributes of the original CWebNodes are updated, so that the semantic network includes information identifying the friends group. Five updates are needed: (i) in the original Fred CStringWebNode **651**, m_pGroup is set to point to the new Fred CListWebNode **665**; (ii) in the first friend CStringWebNode **655**, m_pGroup is set to point to the friend group arc CLinkListWebNode **663**; (iii) in the second friend CStringWebNode **657**, m_pGroup is set to point to the friend group arc CLinkListWebNode **663**; (iv) in the Barney CStringWebNode **653**, m_pGroup is set to point to the friends group list box CListWebNode **661**; and (v) in the Betty CStringWebNode **659**, m_pGroup is set to point to the friends group list box CListWebNode **661**. By updating the original CWebNodes in this manner, the software is able to use the values of the m_pGroup attributes in the original CWebNodes (as rendered or displayed in FIG. 4G) to switch to the rendering or display of the network showing the friends group (as shown in FIG. 4H). Information in the m_pGroup attribute is also used to generate tables (such as table **538** shown in FIG. 5E).

In entering a semantic network, it is possible to set m_pGroup to NULL and avoid generating group CNode and group CWebNodes until they are needed. As illustrated in the above example, such information could be generated at the time a group display is requested. It is preferable, however, to generate group information

incrementally while one builds a semantic network. This enables the user to request that information in the web be reorganized, regrouped, or presented in a different format with almost instantaneous results, as there is no need to generate significant new data structures or to perform prolonged search procedures.

An embodiment of the software that incrementally updates group information may be based on the addition of new nodes and new arcs. Each time a new node is created without a parent, group information may be updated by: (i) creating a CNode and a CWebNode for the new node; (ii) creating a CListNode and a CListWebNode for the new node; and (iii) setting m_pGroup in the new CWebNode to point to the new CListWebNode. Each time a new arc (or new descendant) is added, group information may be updated by: (i) creating a CNode and a CWebNode associated with the new arc; (ii) adding the new arc's CWebNode to m_arrayDescendants for the CWebNode from which the new arc emanated; (iii) searching m_pGroup of the new arc's m_pParent (hereinafter "the Parent's Group" in this example) to determine whether the label of the new arc matches the label of any formerly-created descendant of the Parent's Group; (iv) if there is a match with a previous descendant of the Parent's Group, (a) setting m_pGroup of the new arc equal to the matching CLinkListWebNode, and (b) setting m_pGroup of the destination of the new arc to point to the destination of the matching CLinkListWebNode; and (v) if there is no match, (a) creating a CListNode and a CLinkListWebNode as the group to which the new arc belongs, (b) creating a CListNode and a CListWebNode to hold the members of the group, (c) setting m_pDest in the new CLinkListWebNode to point to the new CListWebNode, (d) adding the new CLinkListWebNode as a descendant of the Parent's Group, and (e) invoking the procedure recursively on this new descendant. The recursion terminates when m_pParent has an m_pGroup set to NULL.

The utility of the data structure of FIG. 6A is further illustrated by showing how it is used for rendering the views shown in FIG. 5. FIG. 5A shows a basic web view in

which 46 CObjects are used, including 23 CNodes and 23 CWebNodes. FIG. 5B shows a first group display of the basic web view in FIG. 5A in which 38 additional CObjects are used, including 19 CListNodes and 19 objects of type CListWebNode or CLinkListWebNode. FIG. 5C shows a second group display of the basic web view of FIG. 5A in which 14 additional objects are used, including 7 CListNodes and 7 objects of type CListWebNode or CLinkListWebNode. To obtain the query results shown in FIG. 5D, the software displays only the items associated with the first m_listNodes in the CListNodes underlying department list box **548** and client list box **550**. FIG. 5E is discussed in detail later in this specification with regard to the display of table data. In FIG. 5F, a CLayoutNode and a CLayoutWebNode would be associated with embedded web **552**. For FIGs. 5G-5H, the software includes a method to display wife arc **560** or husband arc **562** based on the orientation of Wilma node **558** and Fred node **556**. To generate the Barney-based web shown in FIGs. 5I-5M, the software creates a new CWebNode associated with Barney object **566** when that object is created as shown in FIG. 5J. A new CWebNode structure is created for that object based on the structure stored in the CNodes associated with the original web shown in FIG. 5I. Thus, the CNode for best man arc **574** contains the link between married and Barney; the CNode for married arc **576** contains the link between Fred and Wilma; and the CNode for maid of honor arc **578** contains the link between married and Betty. This information is replicated in the new CWebNode structure.

To further illustrate the utility of the data structure, FIG. 7 shows structures used in rendering or displaying a web. In the preferred embodiment, several C++ methods, which operate on objects of class CWebNode, are used to render or display the web. Alternative methods, functions, or procedures may be used to render or display a web using the disclosed or equivalent data structures. FIG. 7 shows four rectangles used in rendering a web, including principal rectangle **700**, source rectangle **702**, destination rectangle **704**, and descendant rectangle **706**. The rectangular union of these four

rectangles (i.e., the smallest rectangle enclosing all of them) is rectangle **708**, which defines the extent of the web. The four rectangles are defined with respect to the CWebNode enclosed by principal rectangle **700**. Thus, source rectangle **702** includes the principal CWebNode's m_pSource and related CWebNodes; destination rectangle **704** includes the principal CWebNode's m_pDest and related CWebNodes; and descendant rectangle **706** includes the CWebNodes comprising m_arrayDescendants in the principal CWebNode and their related CWebNodes.

The top-level method is the general drawing method, CWebNode::Draw, which draws the CWebNode on which the method is invoked (including all related CWebNodes). A parameter, rcBounds, identifies the window space allotted to draw the web. In general, this parameter ensures that the web is properly drawn without overlapping itself or extending beyond the region on the display allocated for it. The first and only step of the general drawing method is to call an extended drawing method identical to CWebNode::Draw with the addition in the extended drawing method of a parameter nWebDrawType, which identifies whether the CWebNode is a principal, source, destination, or descendant. The extended drawing method includes five primary steps. First, the extended drawing method calls itself on its source, which is the CWebNode pointed to by m_pSource. Second, the extended drawing method calls CWebNode::DrawControl, which draws the CWebNode. Third, the extended drawing method calls itself on its destination, which is the CWebNode pointed to by m_pDest. Fourth, the extended drawing method calls CWebNode:: DrawDescendants, which loops through the descendants of the CWebNode included in m_arrayDescendants and calls the extended drawing method on each one. The fifth and final primary step concerns drawing the buttons and lines to connect the buttons. Through recursive calls to these methods, the complete web is rendered or displayed on the desired output device. In making these calls, rcBounds is adjusted to reflect the smaller regions allotted to particular portions of the web. The rectangles are computed in such a way

that: (i) descendants **720** of destination CWebNode **726** push down descendants **722** of principal CWebNode **728**; and (ii) descendants **724** of source CWebNode **730** push principal CWebNode **728** out to the right.

The lines and buttons associated with the web are derived from standard rendering **620**, **622**, and **624**. All three standard renderings draw the button associated with the CWebNode. In addition, standard renderings **622** and **624** draw the horizontal line representing the arc. The last step in the extended drawing method uses the parameter nWebDrawType to draw the connecting lines. If CWebNode is a source, it will draw line **710** from the right end of its control rectangle to the right edge of source rectangle **702**. If CWebNode is a destination, it will draw line **712** from the left end of its button to the left edge of destination rectangle **704**. If CWebNode is a descendant, it will draw line **714** along the left side of descendant rectangle **706** and line **716** from the left end of its button to the left edge of descendant rectangle **706**. Every CWebNode, regardless of nWebDrawType, is responsible for drawing line **718** from the bottom of its button to the top of its descendant rectangle **706**. The CWebNode::DrawControl method is the method where the data in the CNode underlying the CWebNode is actually drawn. This method invokes the drawing method implemented on the object, referenced by m_pControl. This will be an object of a data type derived from CWebControl **626**. For example, CWebEditControl **628** renders string data, and CWebListBoxControl **630** renders list box data.

To render or display groups, the m_bGrouped variables in the CWebNodes are changed dynamically to indicate whether a web should be rendered (a) in its basic form or (b) with groups activated. For example, if m_bGrouped is false for friend CWebNode **663** from the example from FIG. 4H and 6H, the semantic network would be displayed in its basic form as shown in FIG. 4G. However, if m_bGrouped is true for this CWebNode, group CWebNodes **661**, **663**, and **665** would be used to display the semantic network with the friend group activated as shown in FIG. 4H. Other schemes

for triggering the display of a basic web versus a web with groups activated may be used.

Methods may also be used to render or display tables. In one embodiment of the invention, three additional methods are used, including CWebNode::DrawChart, CWebNode::DrawChartTitles, and CWebNode::DrawChartEntries. The first method, CWebNode::DrawChart, takes a parameter indicating the rectangular boundary of the chart and passes a portion of this boundary to the second and third methods, which respectively (i) render the column titles of the chart and (ii) render the entries in each chart column. For the title of the first column, CWebNode::DrawChartTitles uses the m_pParent of the CWebNode for which the chart is being drawn. The remaining column titles are generated from the m_arrayDescendants list of the CWebNode for which the chart is being drawn, including the descendants of these descendants identified in a complete downward traversal of this portion of the web. CWebNode::DrawChartEntries renders the entries in each column, which are identified by the m_pDest of each CWebNode associated with each column title. This method identifies the largest block in each row so that entries in each column are appropriately spaced. In other words, if there are four entries in Column B for the first item in Column A, the second item in Column A will be spaced down accordingly.

The generation of table **538** in FIG. 5E provides an example of how this procedure works. As previously noted, table **538** is generated by performing the table function on button **536** associated with attorney list box **540** in FIG. 5C. Attorney list box **540** is represented by a CListWebNode, on which the CWebNode::DrawChart method is invoked. The title of the first column is the m_pParent of the CListWebNode for attorney list box **540**. This parent is the CLinkListWebNode for attorney arc **542**. Thus, the first column is titled "Attorney" in table **538**. The entries for the first column are derived from the m_pDest of the CLinkListWebNode for attorney arc **542**, which is the CListWebNode for attorney list box **540**. Thus, the entries in the first column are

"Flinststone, Fred", "Rubble, Barney", and "Rock, Susan". The title of the second and third columns of table **538** are derived from the m_arrayDescendants of the CListWebNode for attorney list box **540**. These descendants are the CLinkListWebNodes for department arc **544** and client arc **546**. The entries in the second and third columns of table **538** are derived from the m_pDest of each of these two descendants, which are, respectively, the CListWebNodes for department list box **548** and client list box **550**. In this or an equivalent way, a table may be generated from group information.

In the preferred embodiment, several additional parameters are included in the various drawing methods. The first of these, dwAspect, is a doubleword that indicates whether a display is a full display, a thumbnail sketch, or text only. The second parameter is pDC, a pointer to a device context, a concept used in Microsoft's operating systems to point to a particular output device on which the web should be rendered, such as video monitor **102**, a printer, or some other suitable device. The third parameter is rcInvalid, which indicates the smallest region within rcBounds that needs to be rendered. This parameter provides optimization by avoiding the need to rerender valid portions of a web. Other parameters may be used to enhance the drawing methods of any particular embodiment.

FIG. 8 shows an application of the invention for Internet Management. FIG. 8A shows a semantic network with hypothetical information for a user's favorite World Wide Web hypertext links to Internet sites for Microsoft, IBM, Motorola, and Intel. The semantic network of FIG. 8A may be entered into the computer in a manner consistent with the disclosed software. The semantic network would include arcs for Home Page, FAQ, Corporate Info, Jobs and perhaps other items, and it would be similar in form, for example, to the semantic network shown in FIG. 3B. Other types of Internet sites and features may be enabled, consistent with the features of the software. From the basic semantic network entered into the computer, the software may arrange the information

in useful ways, such as table **800** shown in FIG. 8B for a properly entered semantic network. The Internet Manager may be used to supplement or replace the favorites (or bookmark) feature of a web browser, such as Mosaic, Microsoft Explorer, Netscape Navigator, or another suitable browser. The Internet Manager may alternatively be embodied in separate application software, preferably with a means for linking Internet addresses to a suitable web browser. Operating system software may provide this linking function through cut-and-paste, drag-and-drop, object-linking, hypertext, or equivalent features. For example, double clicking in the CWebNode rendering an html page would launch the web browser to display that page. It is anticipated that the disclosed software could be used to automatically generate a semantic network representation of a World Wide Web site with objects representing World Wide Web pages and arcs representing hyperlinks labeled with associated text.

FIG. 9 shows an application of the invention for Resource Management. FIG. 9A shows a view of a user's computer, which includes floppy drive **900**, hard drive **902**, and CD ROM **904**. While FIG. 9A is in some respects similar to views used for resource management in existing windows-based operating systems, the use of labeled arcs in the present software adds new functionality. Thus, in FIG. 9A, each of devices **900**, **902**, and **904** includes name data at **906** in addition to device icons. FIG. 9B shows the separation of folder icons **908** from folder names **910**. Because the software permits arcs to extend from arcs, even more information may be associated with a device, folder, or file. For example, FIG. 9C shows substantial additional information about hard disk **902** in arcs **912** emanating from arc button **914**. FIG. 9D shows a further level of detail about hard disk **902** by adding link **916** to defrag utility **918**, which is now easily accessible using the semantic network metaphor of the software.

FIGs. 9E-9H shows a more detailed view of hard drive **902**. FIG. 9E again shows the separation of folder icons **908** from folder names **910**. In FIG. 9F, a user may double click on icon **922** to run the Excel spreadsheet application with the

"Sales.xls" document, or click on button **924** to find out further information about the document before running Excel. FIG. 9G shows a view in which further information about the "Sales.xls" document is provided at **926**, and FIG. 9H shows an even further level of detail at **928**. Similar to the Internet Manager application, the Resource Manager application may be incorporated directly into a computer's operating system or embodied in separate application software.

FIG. 10 shows detailed screen displays for one embodiment of the user interface. FIG. 10A shows a possible screen display for use with Microsoft's operating systems, and includes window **1000**, menu bar **1002**, and tool bar **1004**. From left to right, the icons in tool bar **1004** relate to the standard icons used for new, open, save, print, preview, cut, copy, paste, undo, undo multiple, redo, redo multiple, bold, italic, underline, search, collapse, expand, and help. FIG. 10B shows possible shortcut menus for use with Microsoft's operating systems. Shortcut menu **1012** may be activated, for example, when the user clicks the right mouse button over an arc. This shortcut menu allows, among other things, group **1006** and ungroup **1008** actions to be performed on the selected arc. Shortcut menu **1014** may be activated, for example, when the user clicks the right mouse button over a button. This shortcut menu allows, where appropriate, the table **1010** action to be performed on the selected item. Other screen displays and shortcut menus may be used.

In this way, the present invention provides computer software and a user interface for information management. The invention has been shown and described in terms of a general information manager, an Internet Manager, and a Resource Manager. A preferred embodiment has been shown, which uses a particular object-oriented programming language. However, those persons skilled in the art will recognize that other applications may be developed, other programming languages may be used, and other modifications may be made to the preferred embodiment without departing from the spirit of the invention as claimed below.

We claim:

1. A computer system for information management, comprising:

an input device for entering a semantic network, said semantic network comprising labeled parent nodes, arc nodes, and destination nodes, each of said arc nodes connecting a parent node and a destination node;

an output device for displaying said semantic network in a basic form and in a group form, wherein said basic form comprises said parent nodes, arc nodes, and destination nodes, and wherein said group form comprises group arc nodes and other group nodes, said group arc nodes comprising those arc nodes having identical labels and identical parents, and said other group nodes comprising said parent nodes, arc nodes, and destination nodes other than said group arc nodes and said arc nodes comprising said group arc nodes;

a processing unit for identifying said group arc nodes and said other group nodes and for creating a data structure representing said semantic network in said basic form and said group form;

a memory unit for storing said data structure.

2. The computer system of claim 1, wherein at least one parent node or destination node is an arc node.

3. The computer system of claim 1, wherein said semantic network comprises Internet data.

4. The computer system of claim 1, wherein said semantic network comprises computer resource data.

5. The computer system of claim 1, wherein a destination of at least one group arc node is selected from the group consisting of a list box, a chart, and a graph.

6. A method of managing information on a general-purpose computer system, comprising:

storing an executable information management program in a memory of a said computer; and

executing said executable information management program, comprising the steps of:

inputting a semantic network using an input device, said semantic network comprising labeled parent nodes, arc nodes and destination nodes, each of said arc nodes connecting a parent node and a destination node;

storing said semantic network in said memory of said computer in a basic form and in a group form, said basic form comprising said parent nodes, arc nodes and destination nodes, and said group form comprising group arc nodes and other group nodes, said group arc nodes comprising those arc nodes having identical labels and identical parents, and said other group nodes comprising said parents nodes, arc nodes and destination nodes other than said group arc nodes and said arc nodes comprising said group arc nodes; and

displaying said semantic network stored in said memory on an output device, wherein said semantic network may be displayed in said basic form and in said group form.

7. The method of claim 6, wherein at least one parent node or destination node is an arc node.

8. The method of claim 6, wherein said semantic network comprises Internet data.

9. The method of claim 6, wherein said semantic network comprises computer resource data.

10. The method of claim 6, wherein a destination of at least one group arc node is selected from the group consisting of a list box, a chart, and a graph.

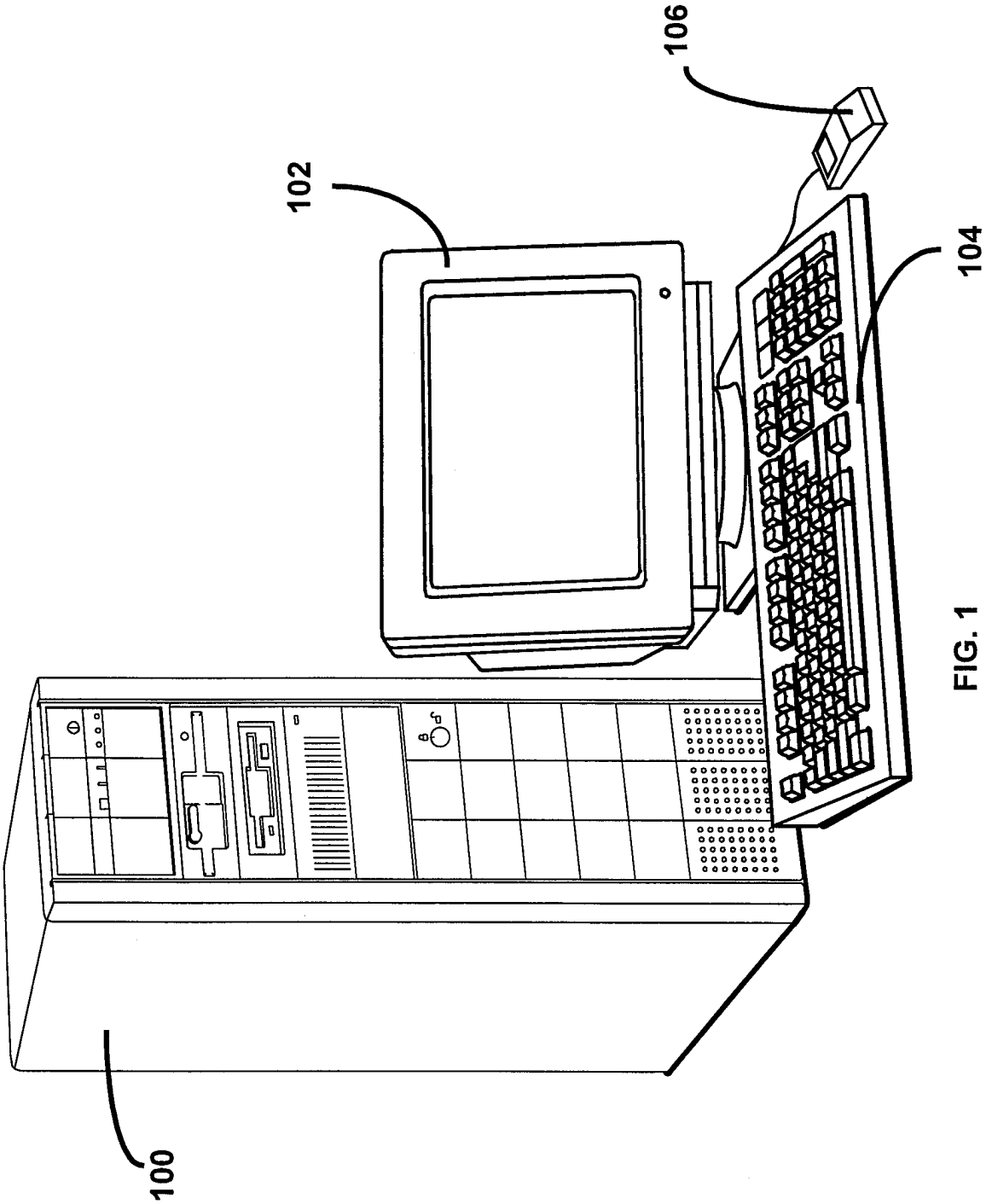

FIG. 1

FIG. 2

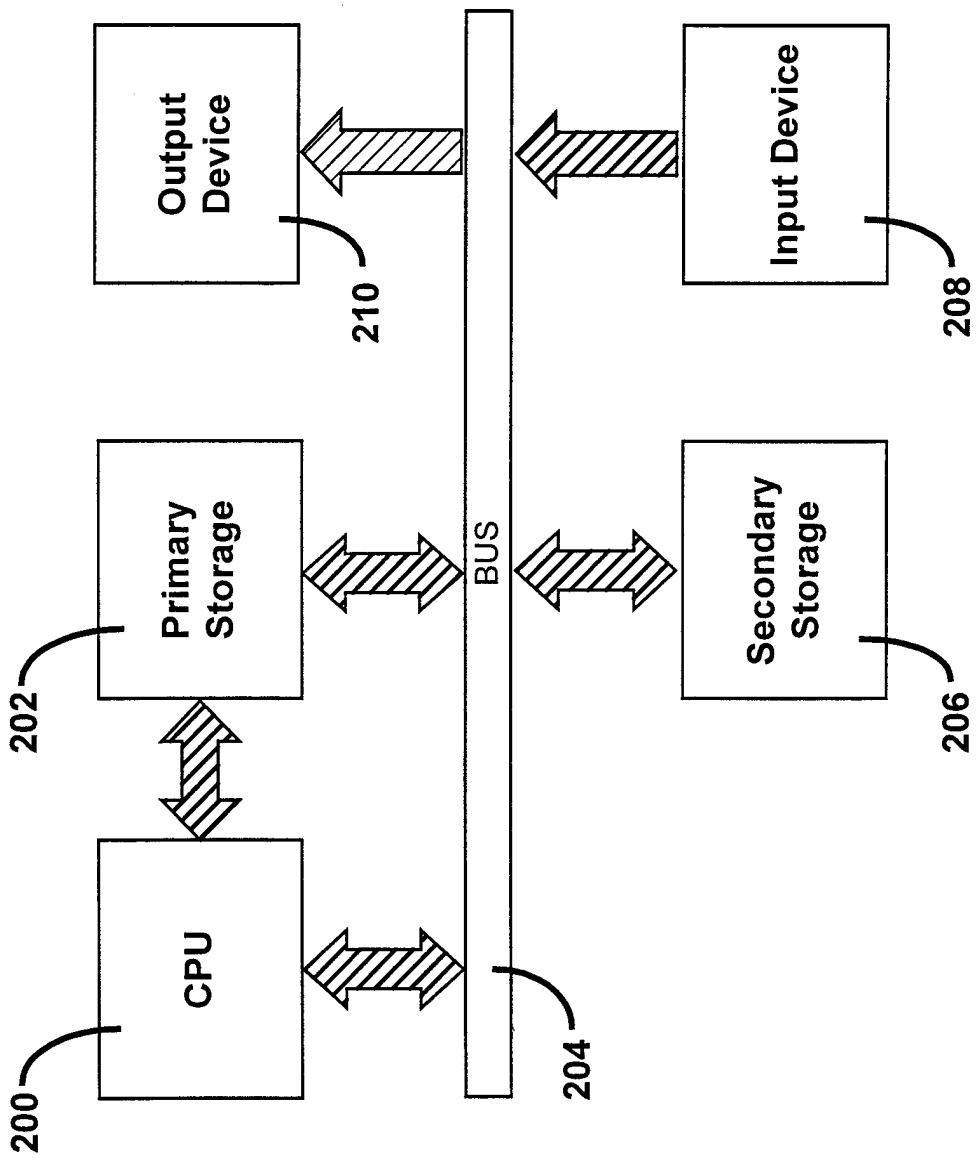
Output Device
210
Input Device
208
Primary Storage
202
BUS
Secondary Storage
206
CPU
200
204

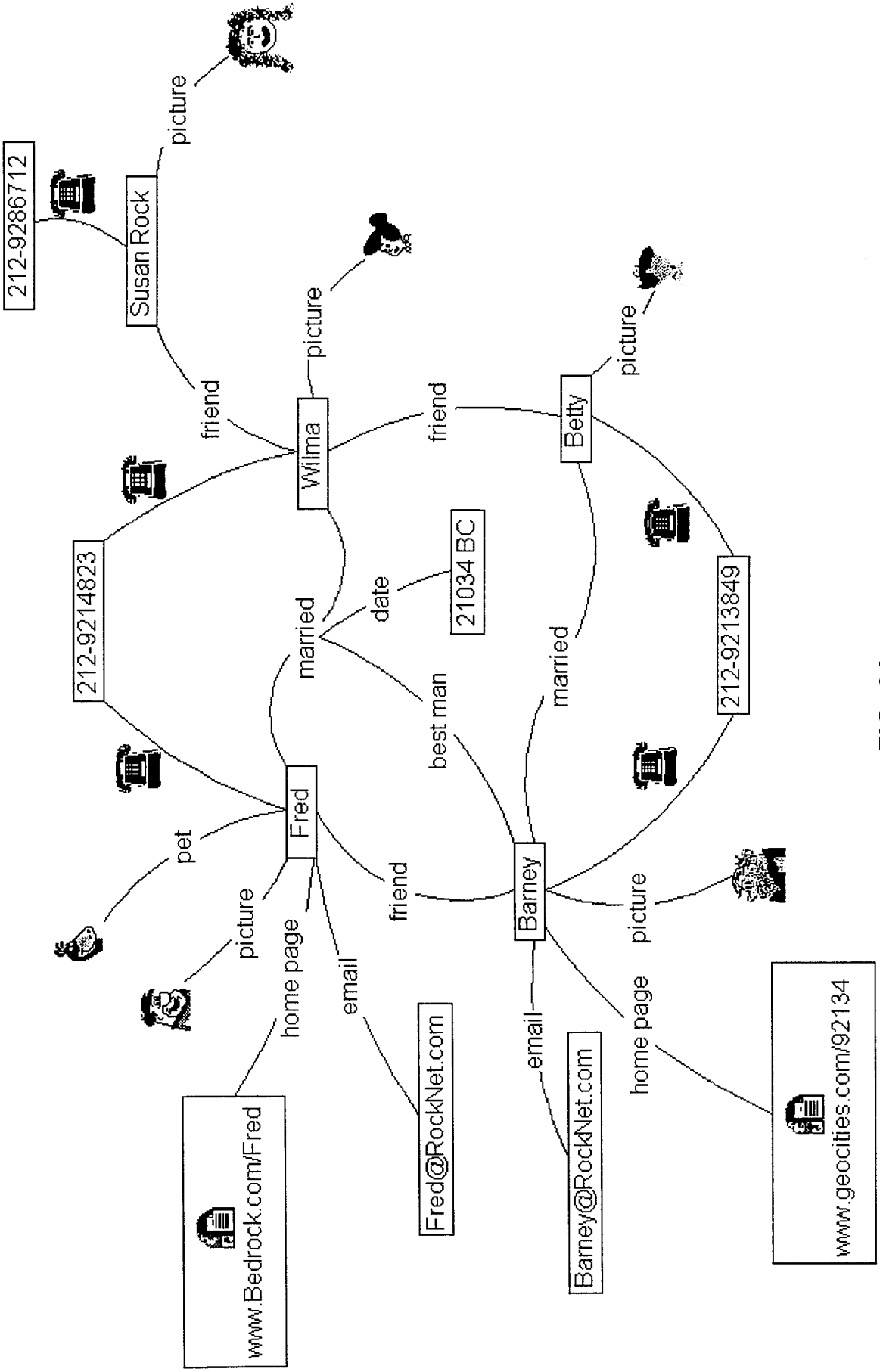
212-9286712
Susan Rock
picture
friend
Wilma
picture
friend
Betty
picture
212-9214823
married
date
21034 BC
married
212-9213849
best man
Fred
Barney
pet
picture
home page
email
friend
picture
home page
email
Fred@RockNet.com
Barney@RockNet.com
www.Bedrock.com/Fred
www.geocities.com/92134

FIG. 3A

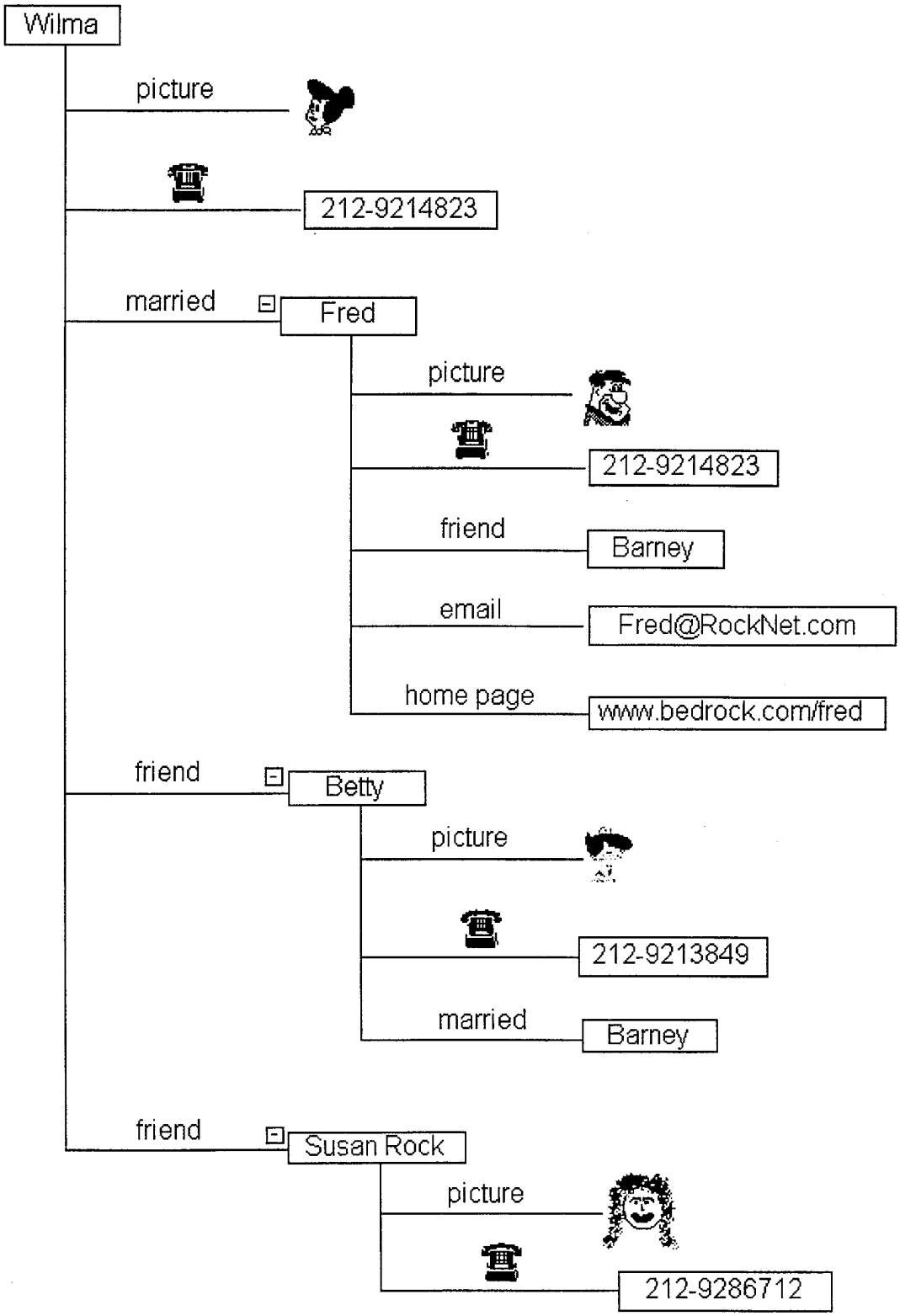
Wilma
picture
212-9214823
married
Fred
picture
212-9214823
friend
Barney
email
Fred@RockNet.com
home page
www.bedrock.com/fred
friend
Betty
picture
212-9213849
married
Barney
friend
Susan Rock
picture
212-9286712

FIG. 3B

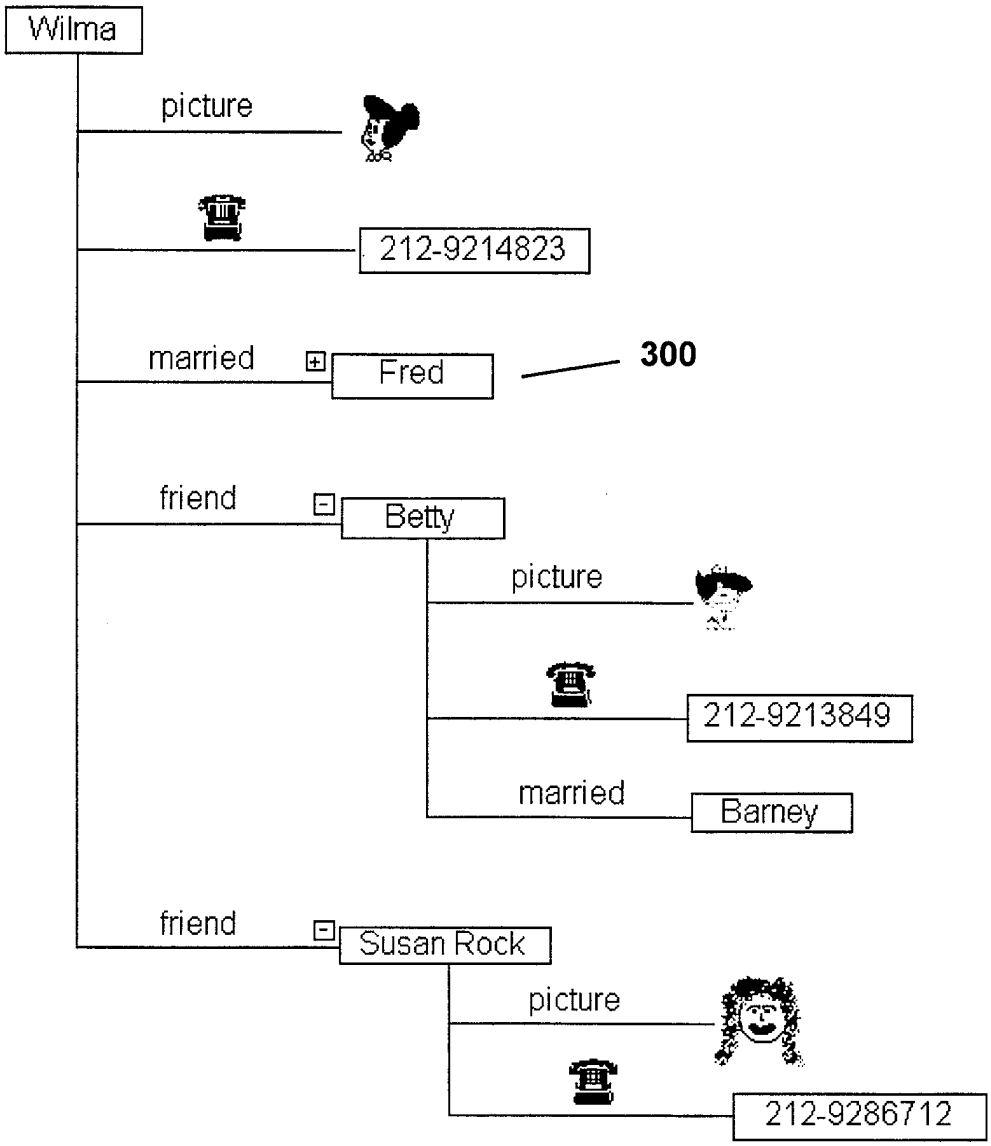
Wilma
picture
212-9214823
married
Fred
300
friend
Betty
picture
212-9213849
married
Barney
friend
Susan Rock
picture
212-9286712

FIG. 3C

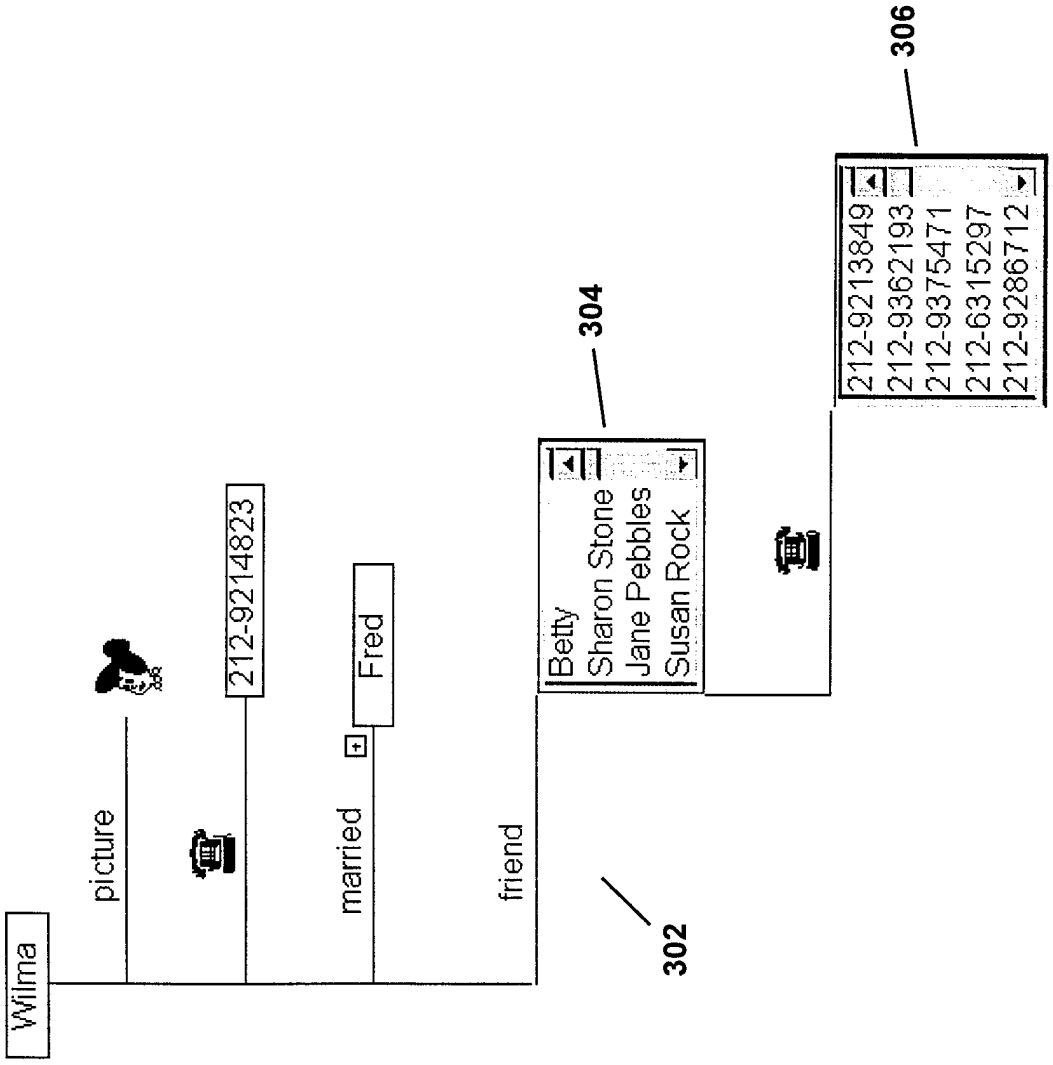
Wilma
picture
212-9214823
married
Fred
friend
Betty
Sharon Stone
Jane Pebbles
Susan Rock
212-9213849
212-9362193
212-9375471
212-6315297
212-9286712
302
304
306

FIG. 3D

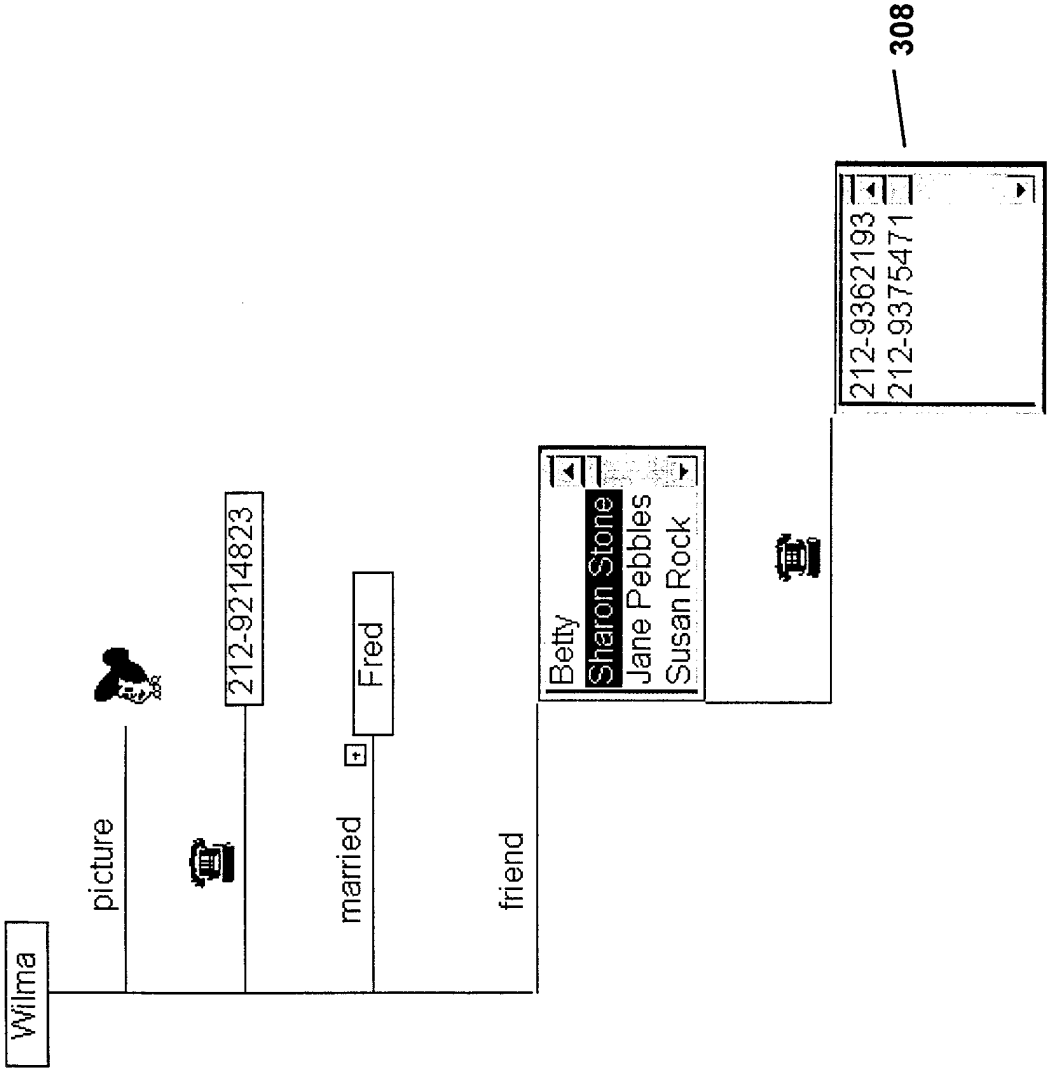
308
Wilma
picture
212-9214823
married
Fred
friend
Betty
Sharon Stone
Jane Pebbles
Susan Rock
212-9362193
212-9375471

FIG. 3E

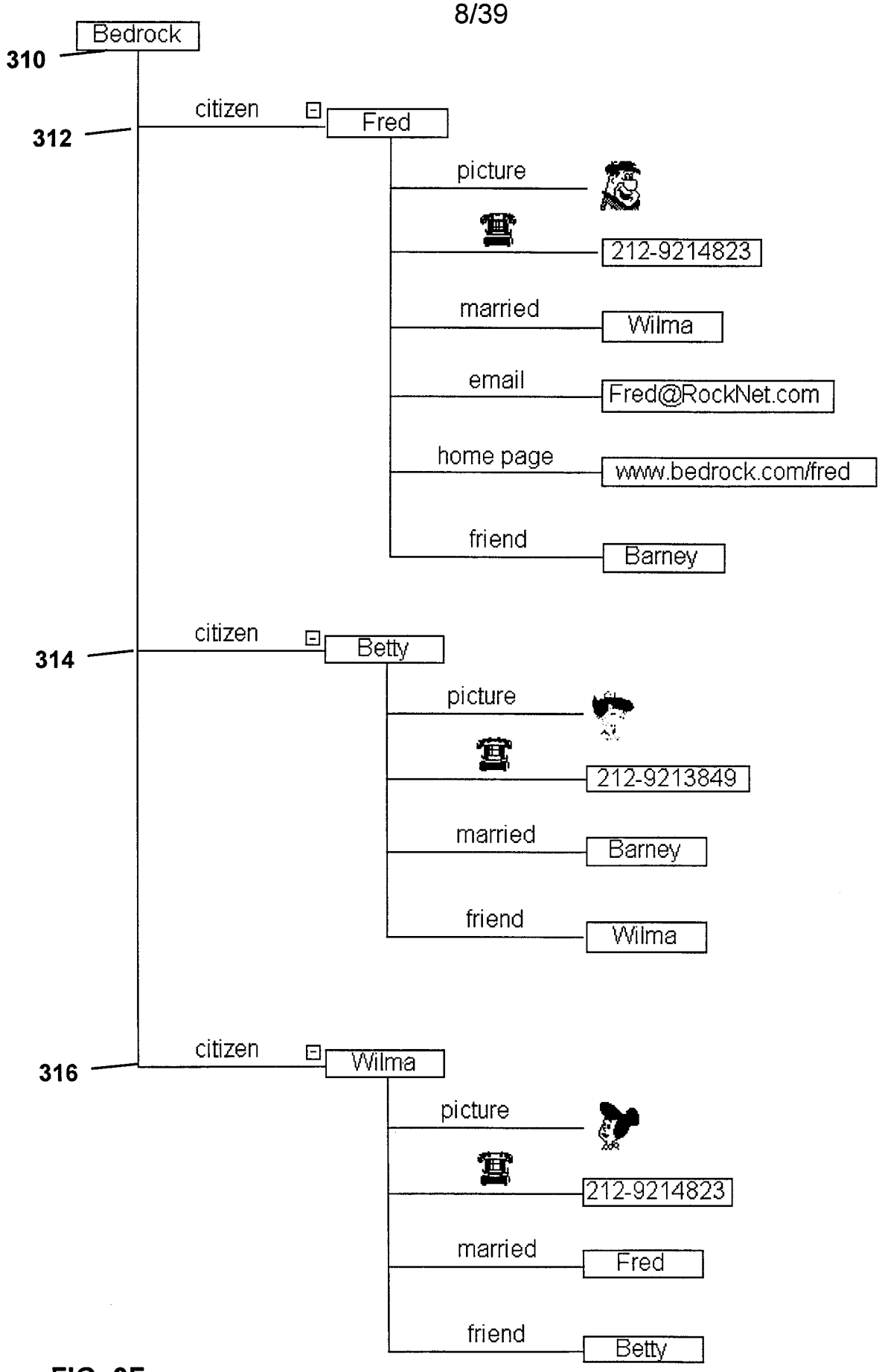
Bedrock
310
citizen
Fred
312
picture
212-9214823
married
Wilma
email
Fred@RockNet.com
home page
www.bedrock.com/fred
friend
Barney
citizen
Betty
314
picture
212-9213849
married
Barney
friend
Wilma
citizen
Wilma
316
picture
212-9214823
married
Fred
friend
Betty

FIG. 3F

Bedrock

citizen

320

	picture	☎	married	email	friend	home page
Fred		212-9214823	Wilma	Fred@RockNet.com	Barney	bedrock.com/fred
Betty		212-9213849	Barney		Wilma	
Wilma		212-9214823	Fred		Betty	

FIG. 3G

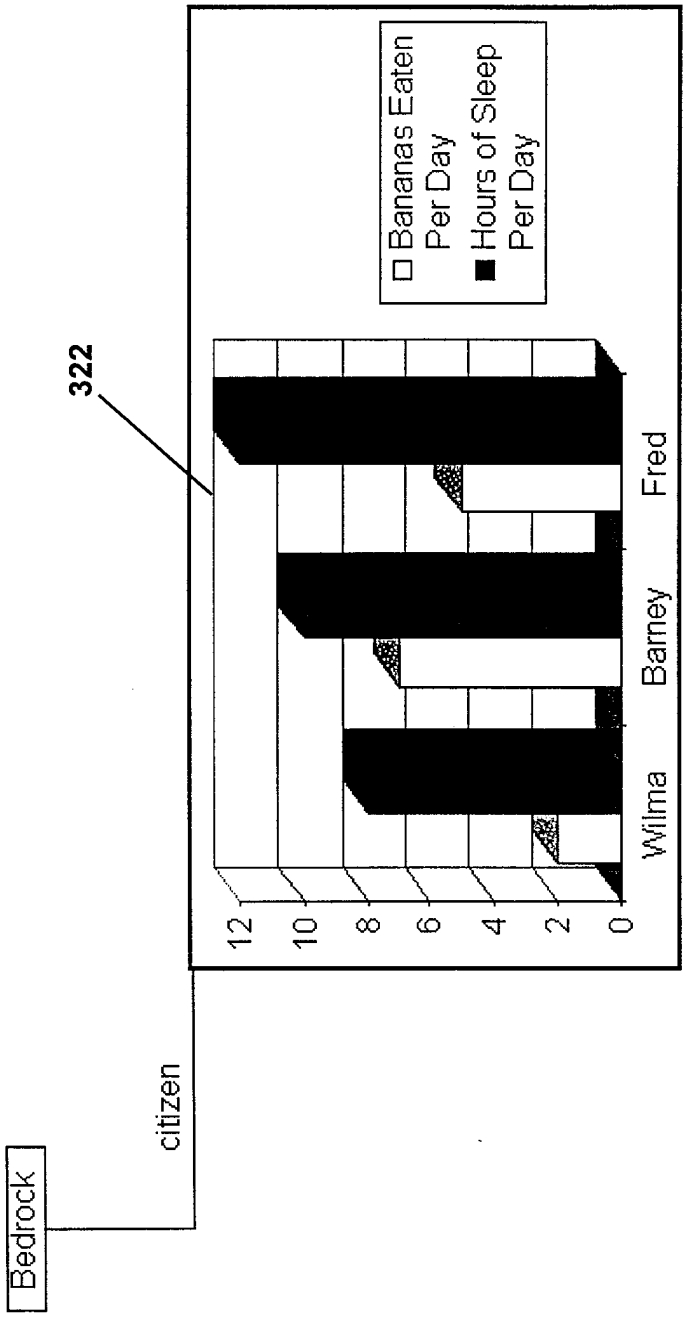
Bedrock
citizen
322
12
10
8
6
4
2
0
Wilma
Barney
Fred
Bananas Eaten Per Day
Hours of Sleep Per Day

FIG. 3H

FIG. 4B

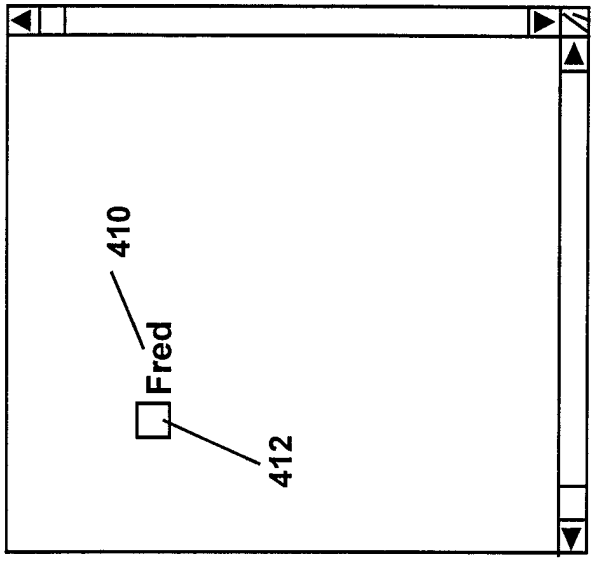

FIG. 4A

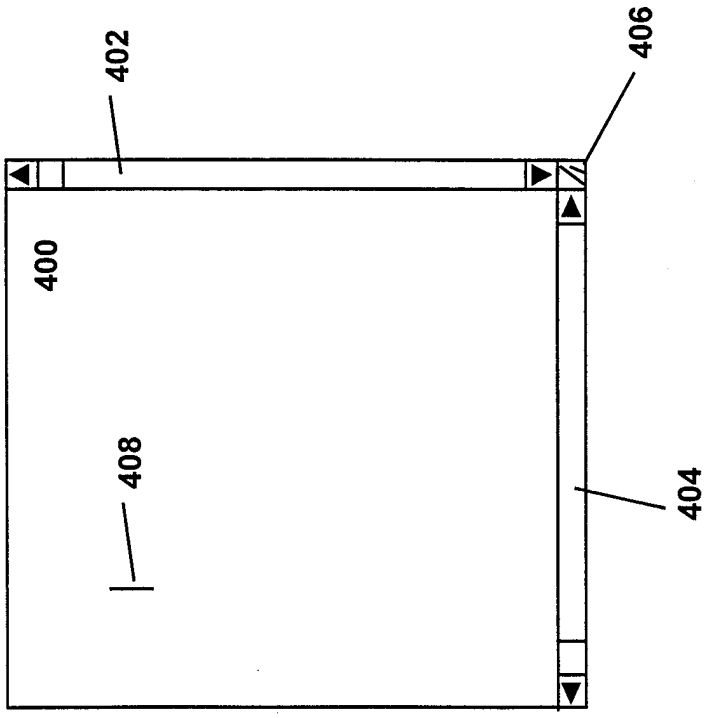

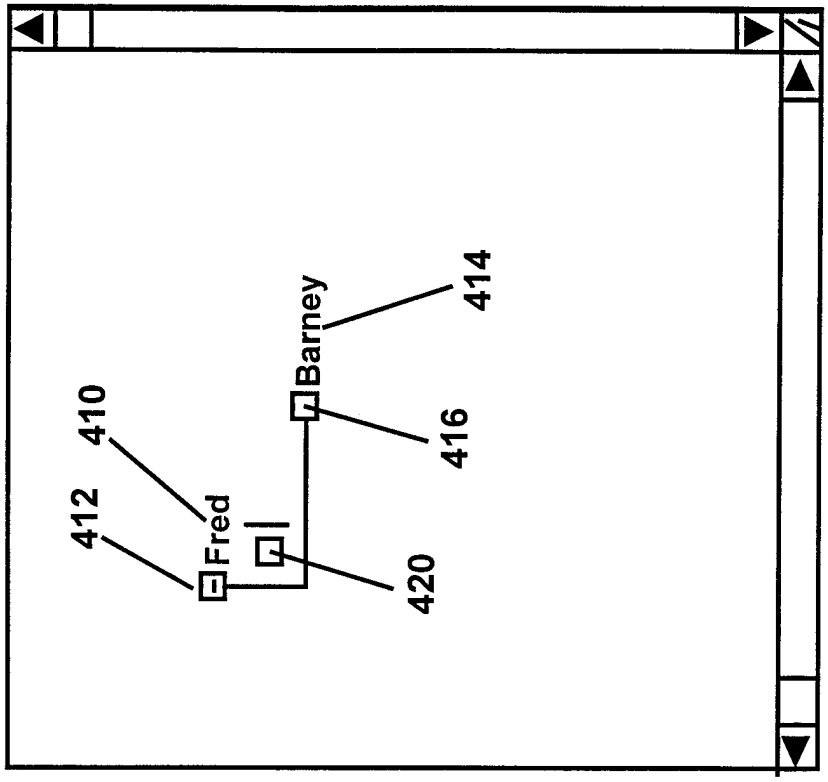
Fred
Barney
410
412
414
416
420

FIG. 4D

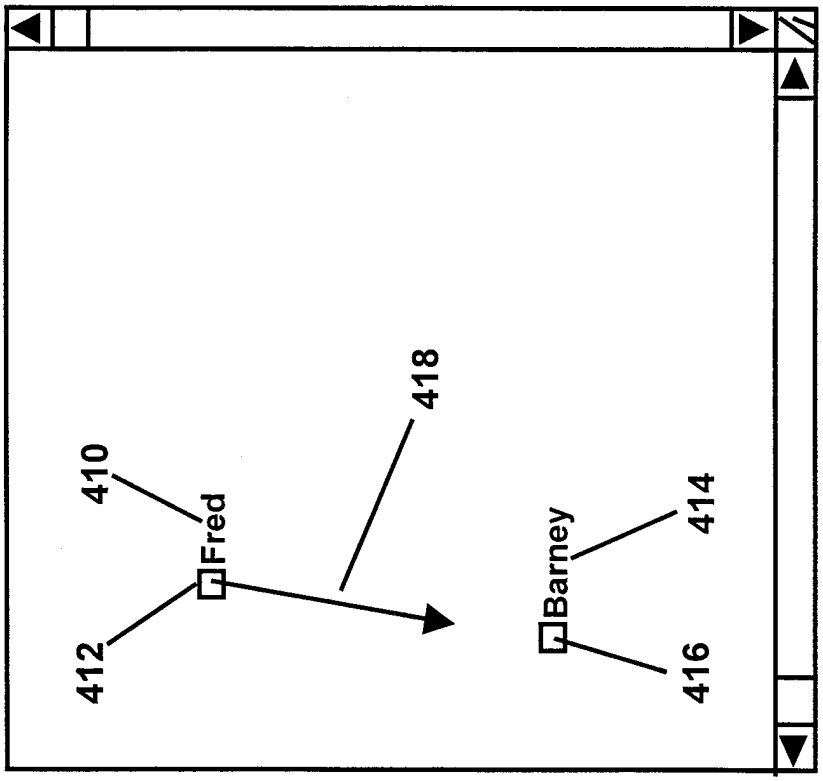
Fred
Barney
410
412
414
416
418

FIG. 4C

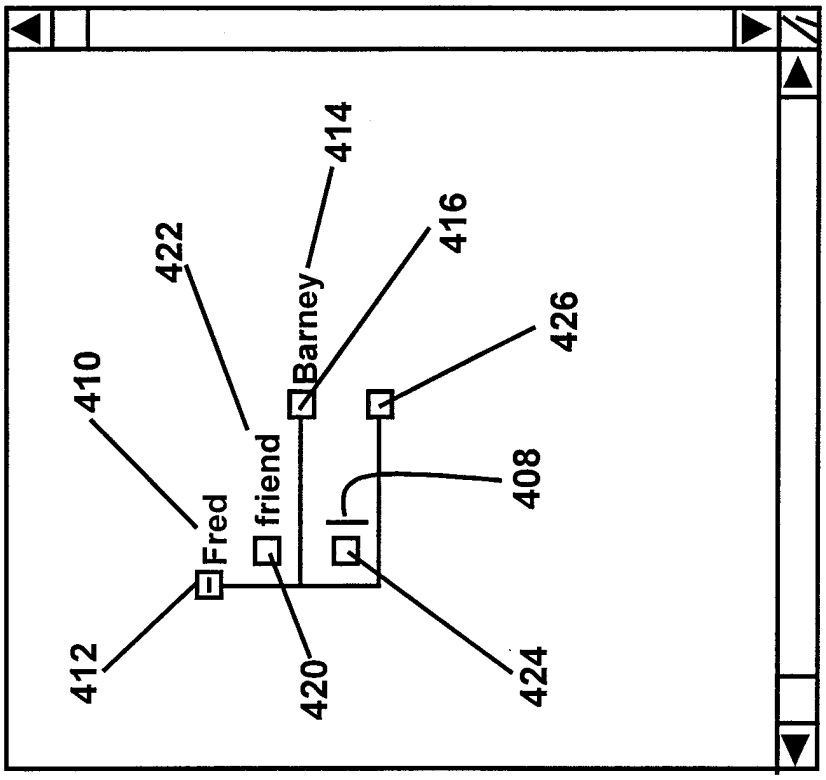
Fred
friend
Barney
412
410
422
414
416
420
418

FIG. 4E

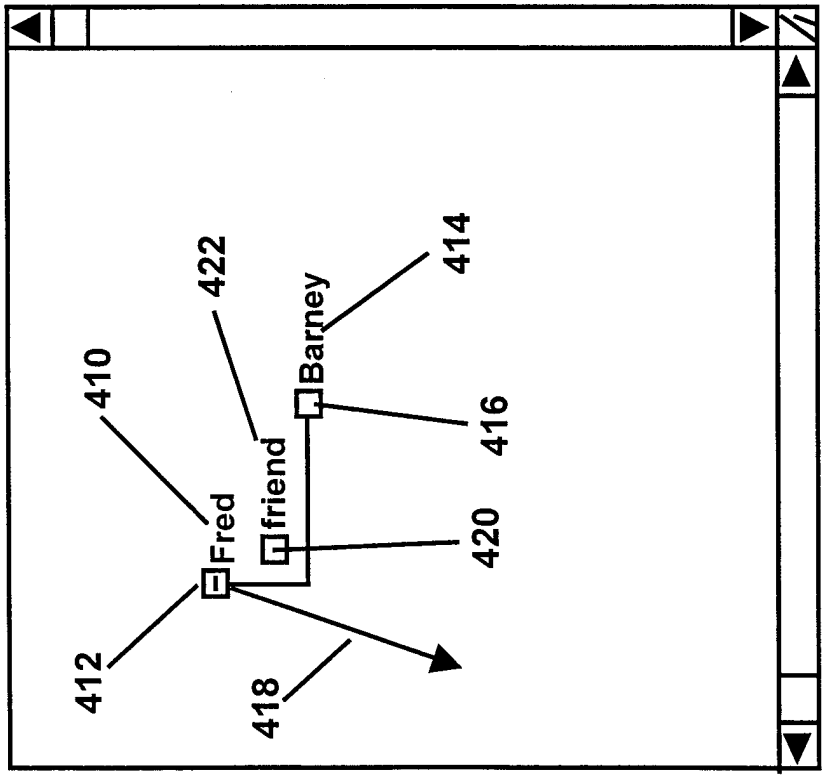
Fred
friend
Barney
412
410
422
414
416
420
424
408
426

FIG. 4F

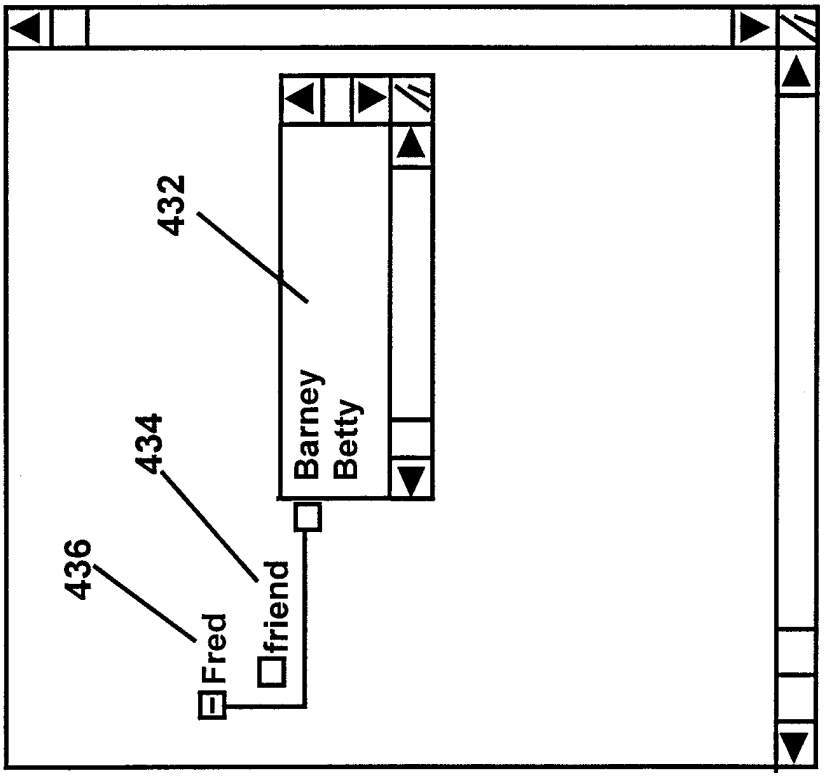
Fred
friend
Barney
Betty
friend
436
434
432

FIG. 4H

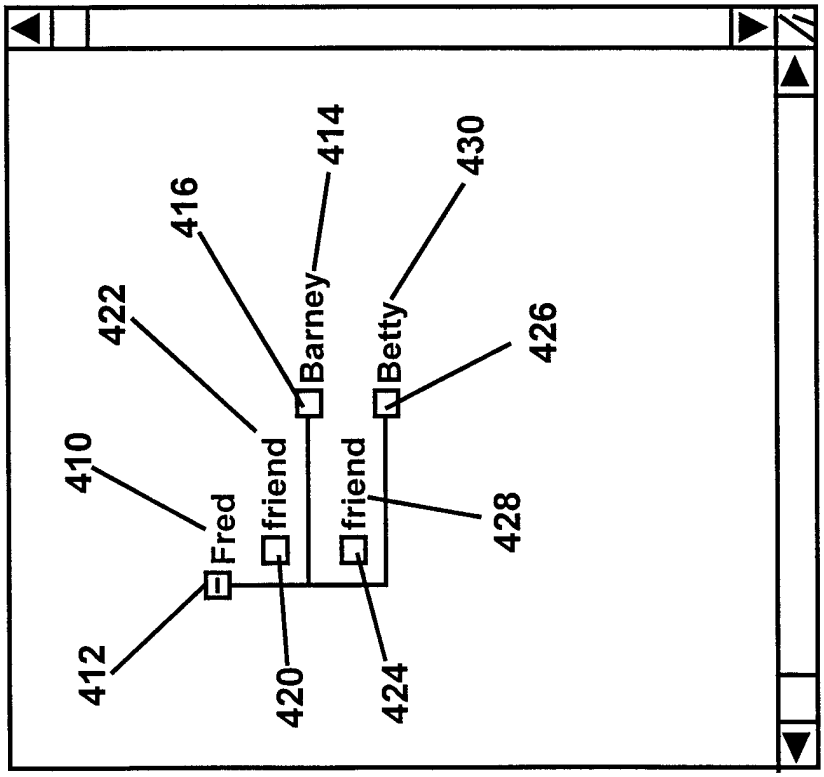
Fred
friend
Barney
friend
Betty
412
410
420
422
416
414
424
428
430
426

FIG. 4G

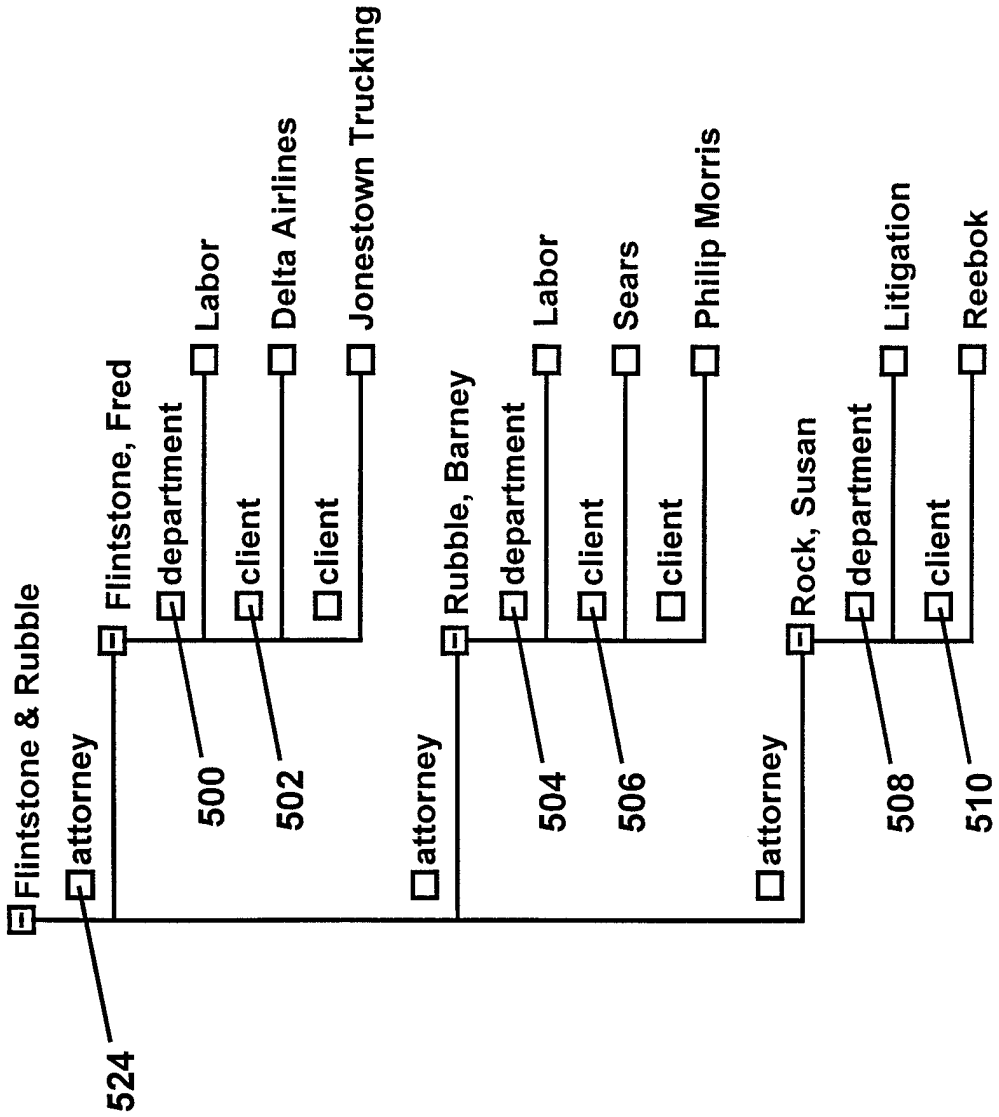
Flintstone & Rubble
attorney
524
Flintstone, Fred
department
500
Labor
client
502
Delta Airlines
client
Jonestown Trucking
attorney
Rubble, Barney
department
504
Labor
client
506
Sears
client
Philip Morris
attorney
Rock, Susan
department
508
Litigation
client
510
Reebok

FIG. 5A

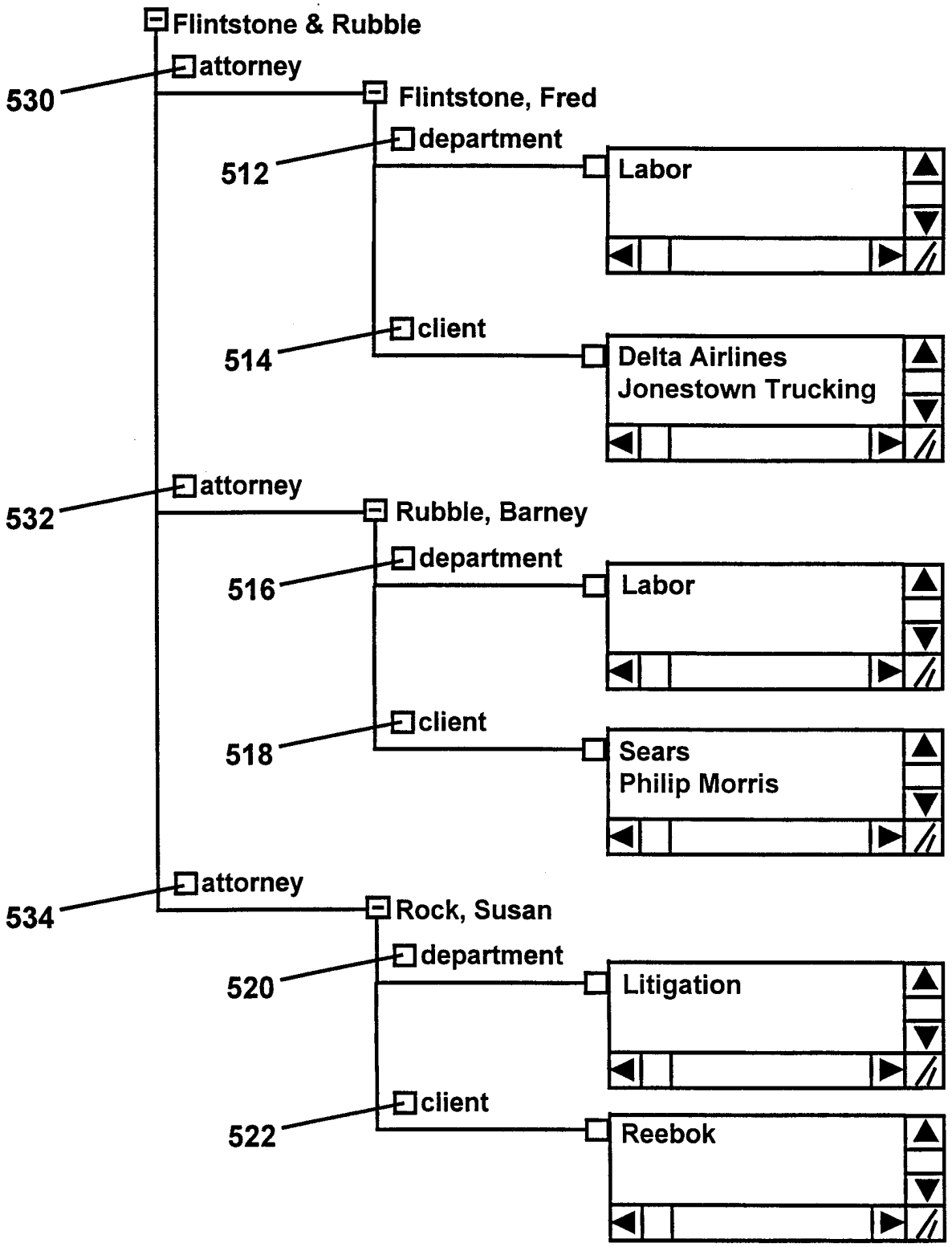
Flintstone & Rubble
530
attorney
Flintstone, Fred
512
department
Labor
514
client
Delta Airlines
Jonestown Trucking
532
attorney
Rubble, Barney
516
department
Labor
518
client
Sears
Philip Morris
534
attorney
Rock, Susan
520
department
Litigation
522
client
Reebok

FIG. 5B

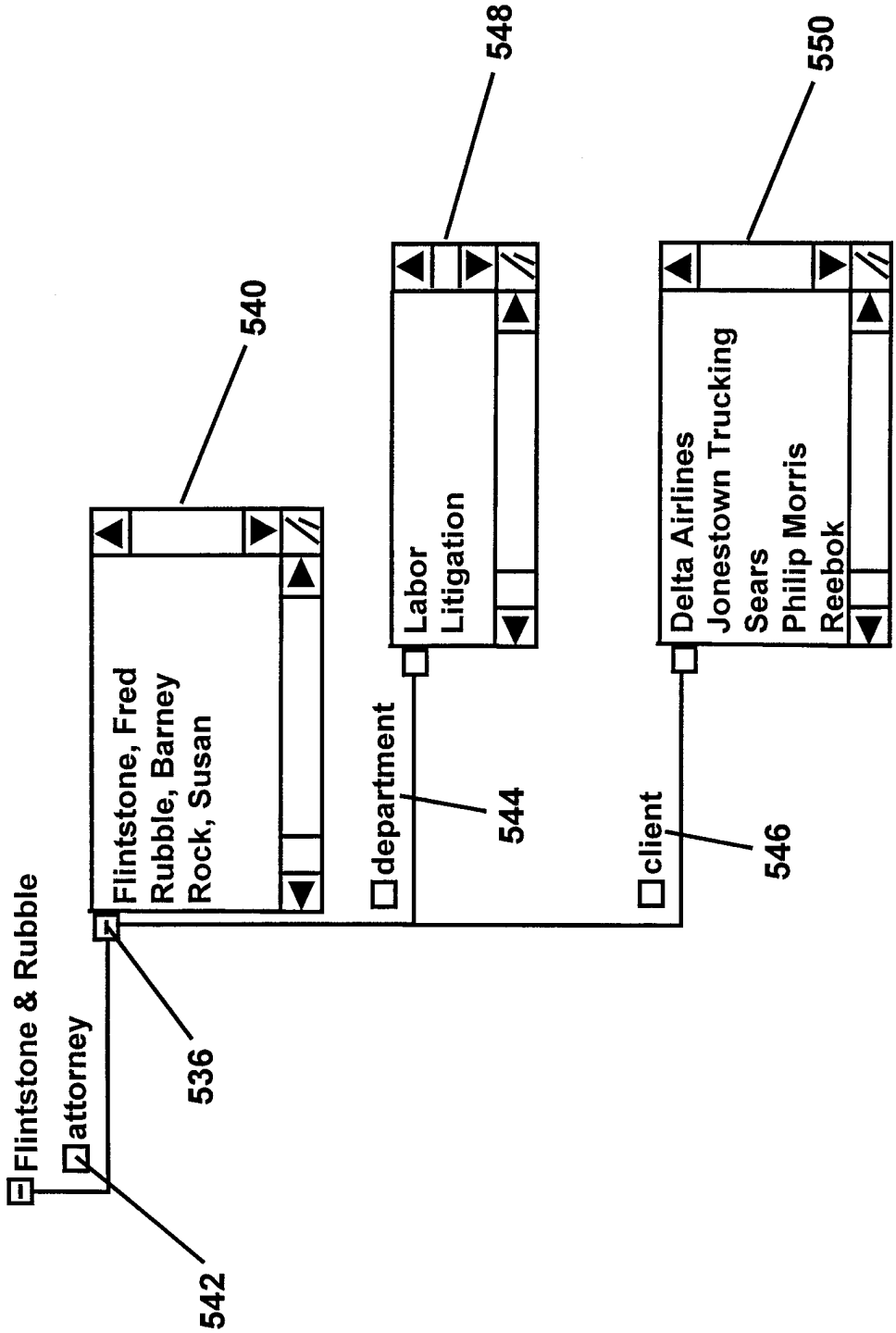
Flintstone & Rubble
attorney
542
536
Flintstone, Fred
Rubble, Barney
Rock, Susan
540
department
544
Labor
Litigation
548
client
546
Delta Airlines
Jonestown Trucking
Sears
Philip Morris
Reebok
550

FIG. 5C

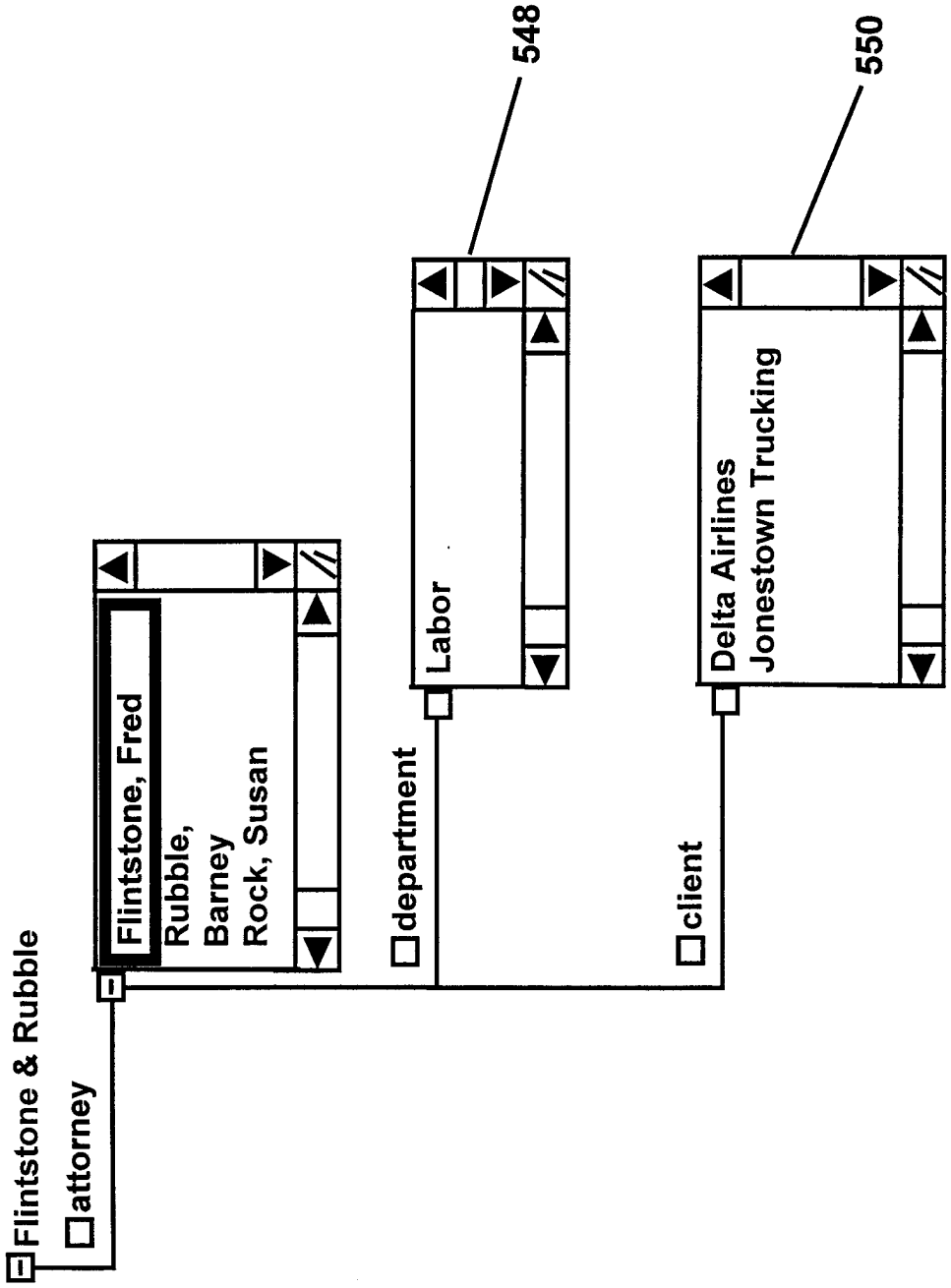
548
550
Flintstone & Rubble
attorney
Flintstone, Fred
Rubble,
Barney
Rock, Susan
department
Labor
client
Delta Airlines
Jonestown Trucking

FIG. 5D

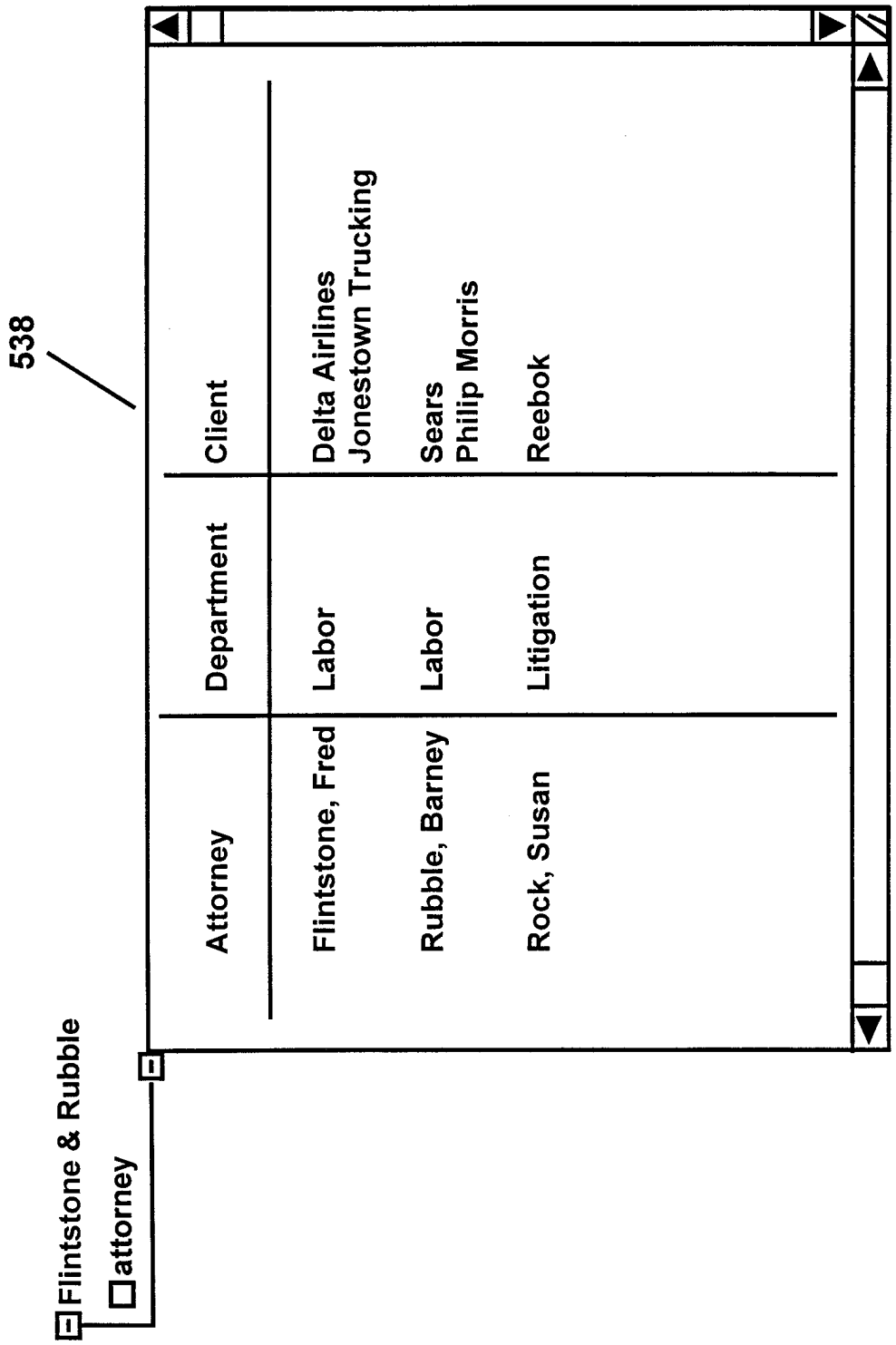
538
Flintstone & Rubble
attorney
Attorney
Department
Client
Flintstone, Fred
Labor
Delta Airlines
Jonestown Trucking
Rubble, Barney
Labor
Sears
Philip Morris
Rock, Susan
Litigation
Reebok

FIG. 5E

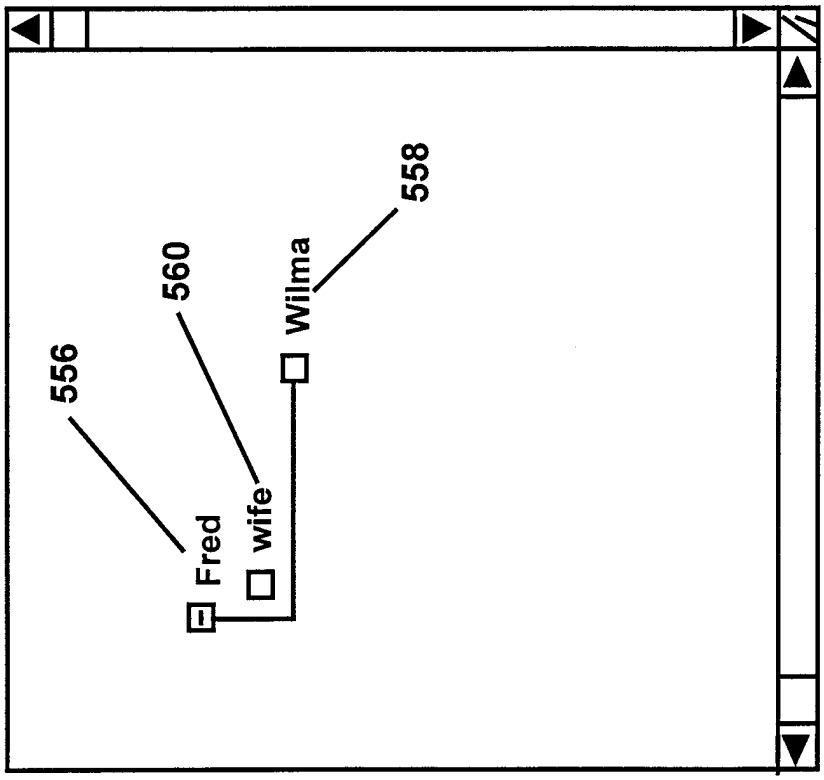
556
560
558
Fred
wife
Wilma

FIG. 5G

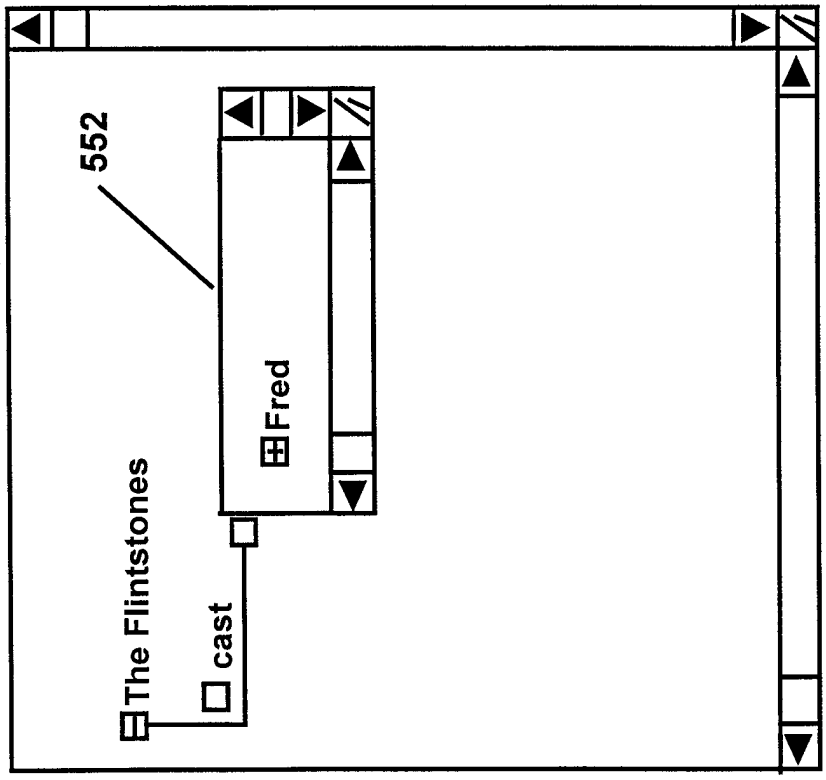
554
552
The Flintstones
cast
Fred

FIG. 5F

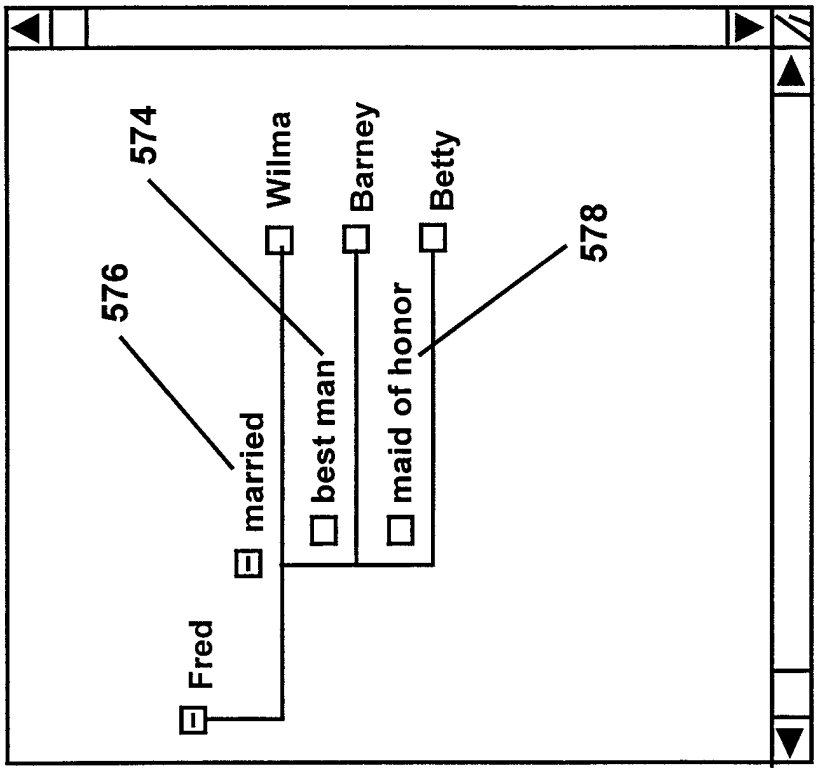
Fred
married
best man
maid of honor
Wilma
Barney
Betty
576
574
578

FIG. 5I

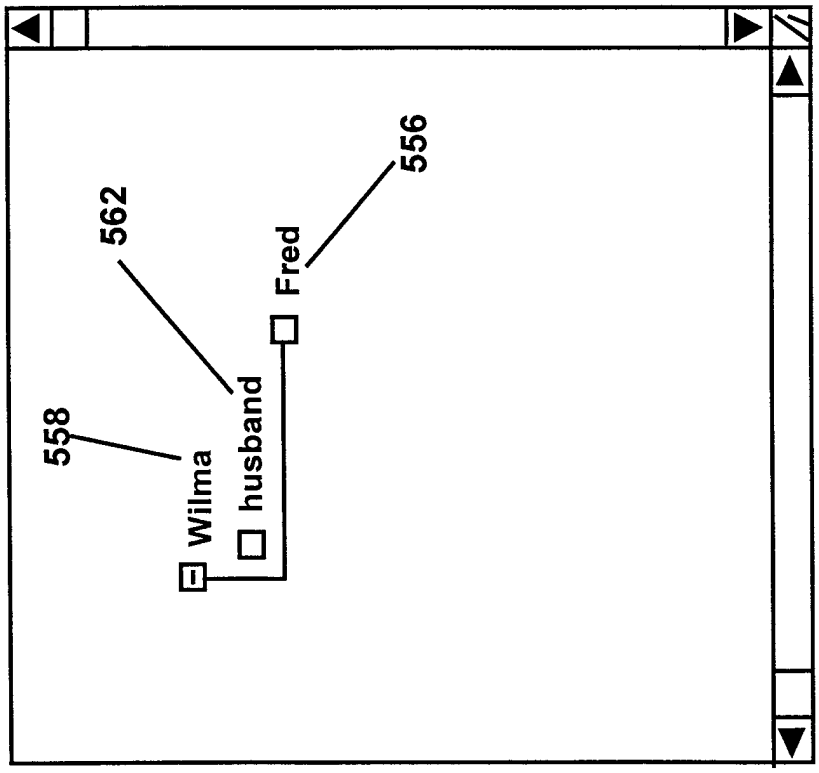
Wilma
husband
Fred
558
562
556

FIG. 5H

FIG. 5K

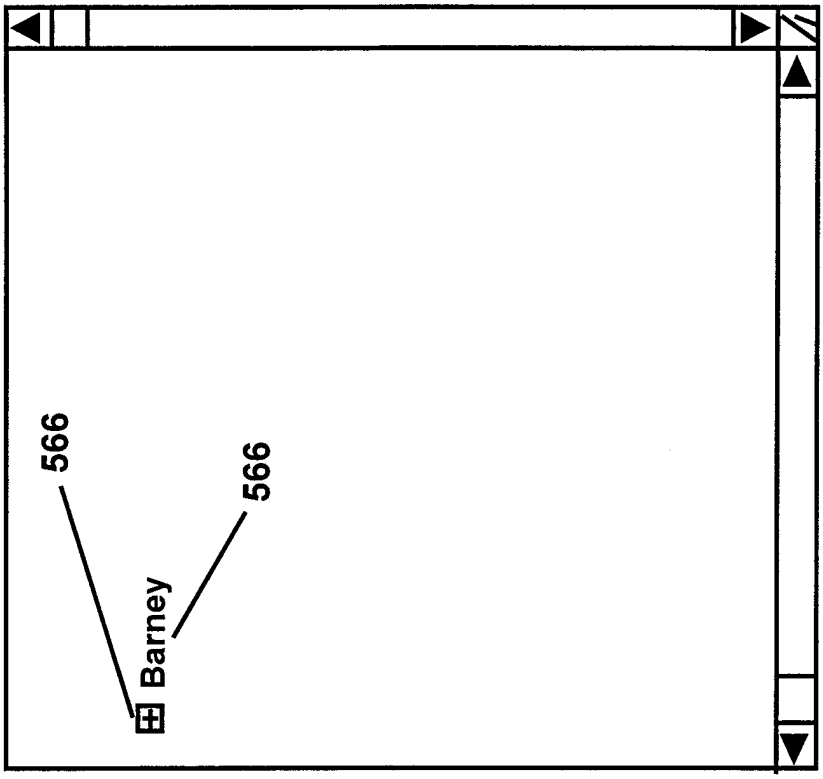
566
566
Barney

FIG. 5J

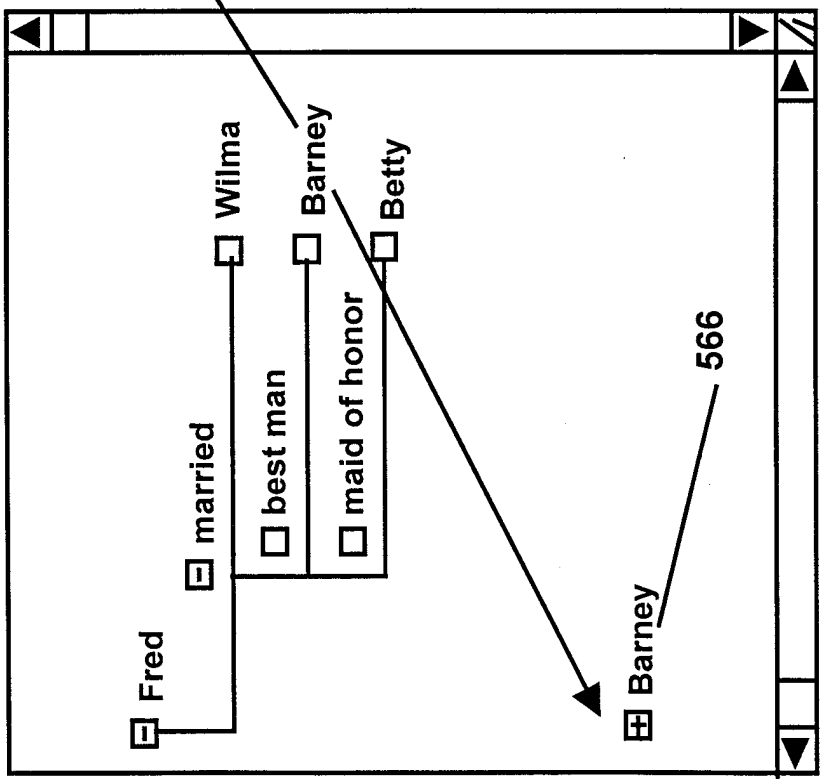
564
Fred
married
Wilma
best man
Barney
maid of honor
Betty
566
Barney

FIG. 5M

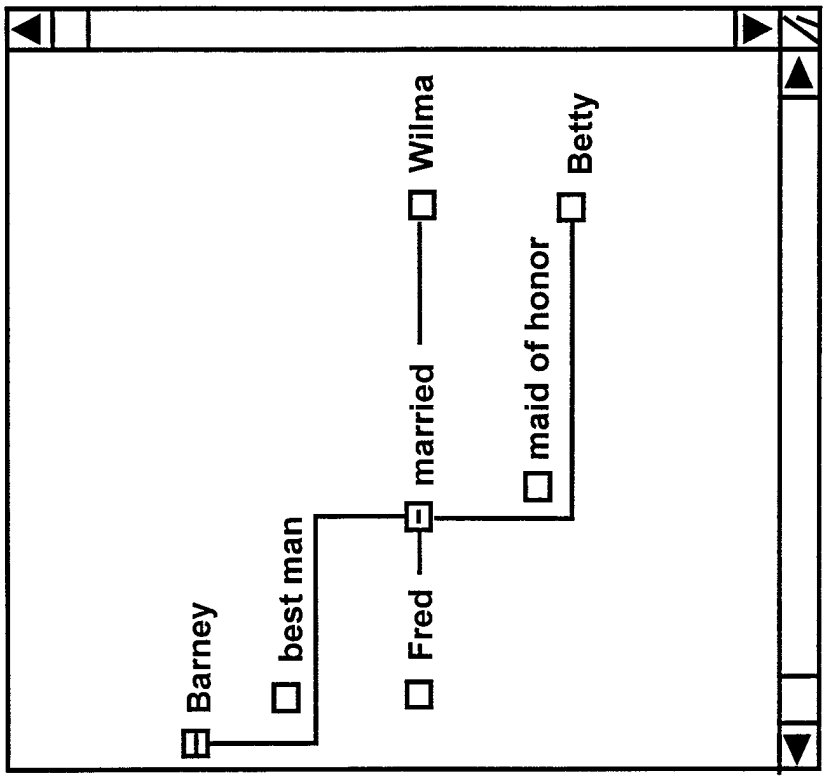
Barney
best man
Fred
married
Wilma
maid of honor
Betty

FIG. 5L

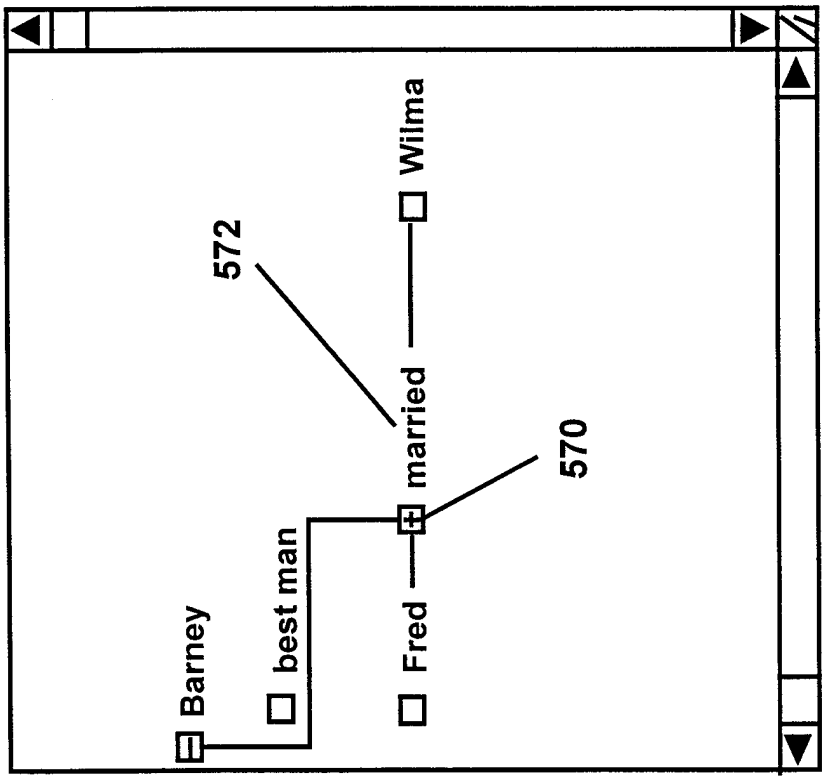
Barney
best man
Fred
married
Wilma
572
570

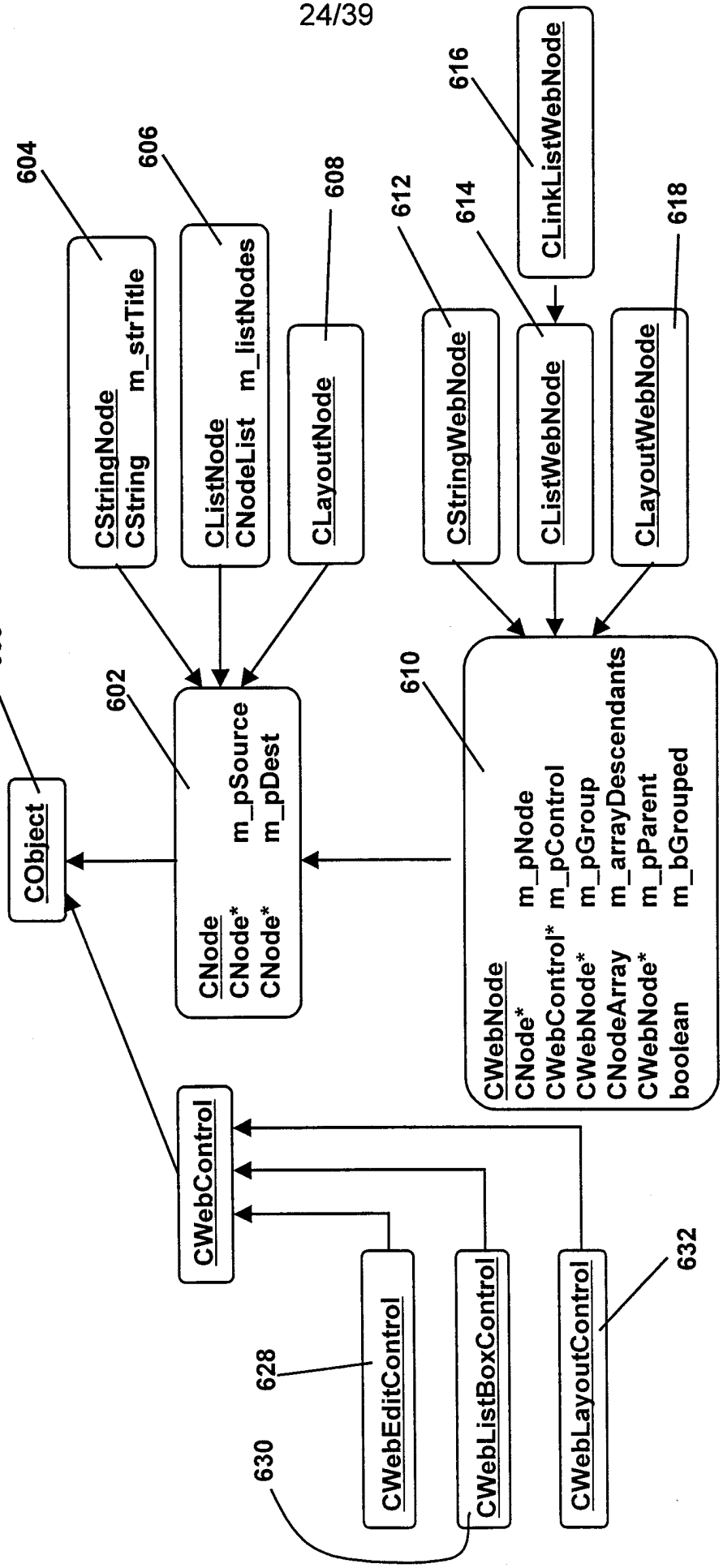
600
CObject
602
CNode
CNode*
CNode*
m_pSource
m_pDest
604
CStringNode
CString
m_strTitle
606
CListNode
CNodeList
m_listNodes
608
CLayoutNode
610
CWebNode
CNode*
CWebControl*
CWebNode*
CNodeArray
CWebNode*
boolean
m_pNode
m_pControl
m_pGroup
m_arrayDescendants
m_pParent
m_bGrouped
612
CStringWebNode
614
CListWebNode
616
CLinkListWebNode
618
CLayoutWebNode
CWebControl
628
CWebEditControl
630
CWebListBoxControl
632
CWebLayoutControl

FIG. 6A

FIG. 6B

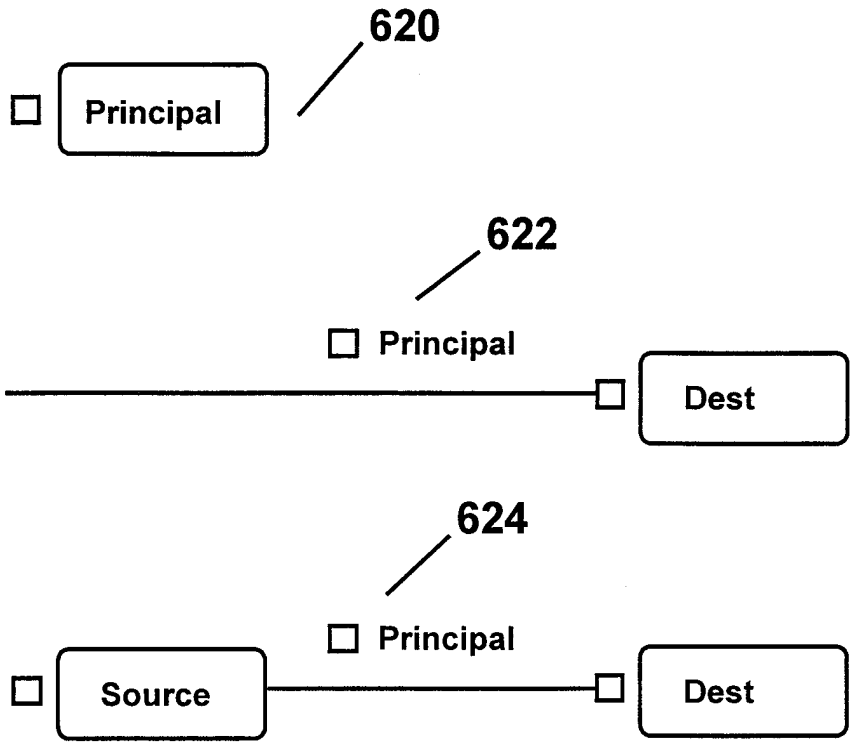
620
Principal
622
Principal
Dest
624
Principal
Source
Dest

FIG. 6C

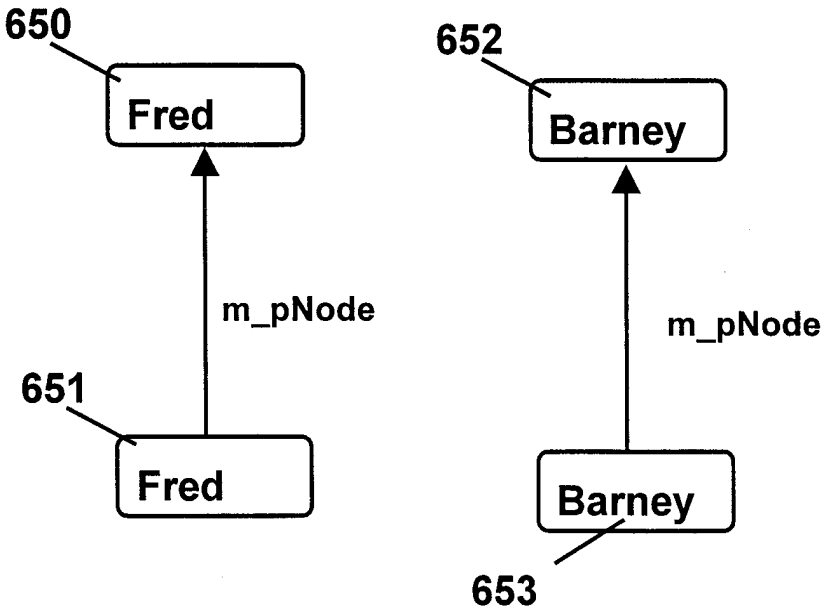
650
Fred
652
Barney
m_pNode
m_pNode
651
Fred
Barney
653

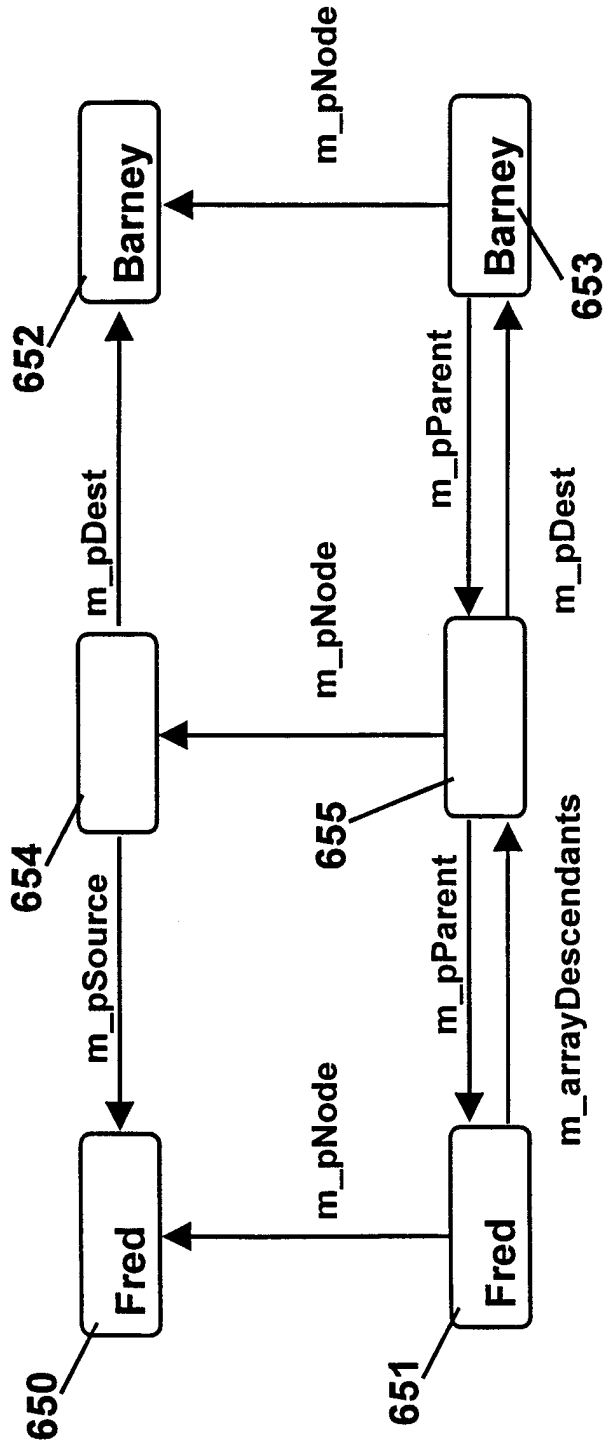
Barney
Barney
Fred
Fred
m_pNode
m_pDest
m_pNode
m_pParent
m_pDest
m_pSource
m_pNode
m_pParent
m_arrayDescendants
652
653
654
655
650
651

FIG. 6D

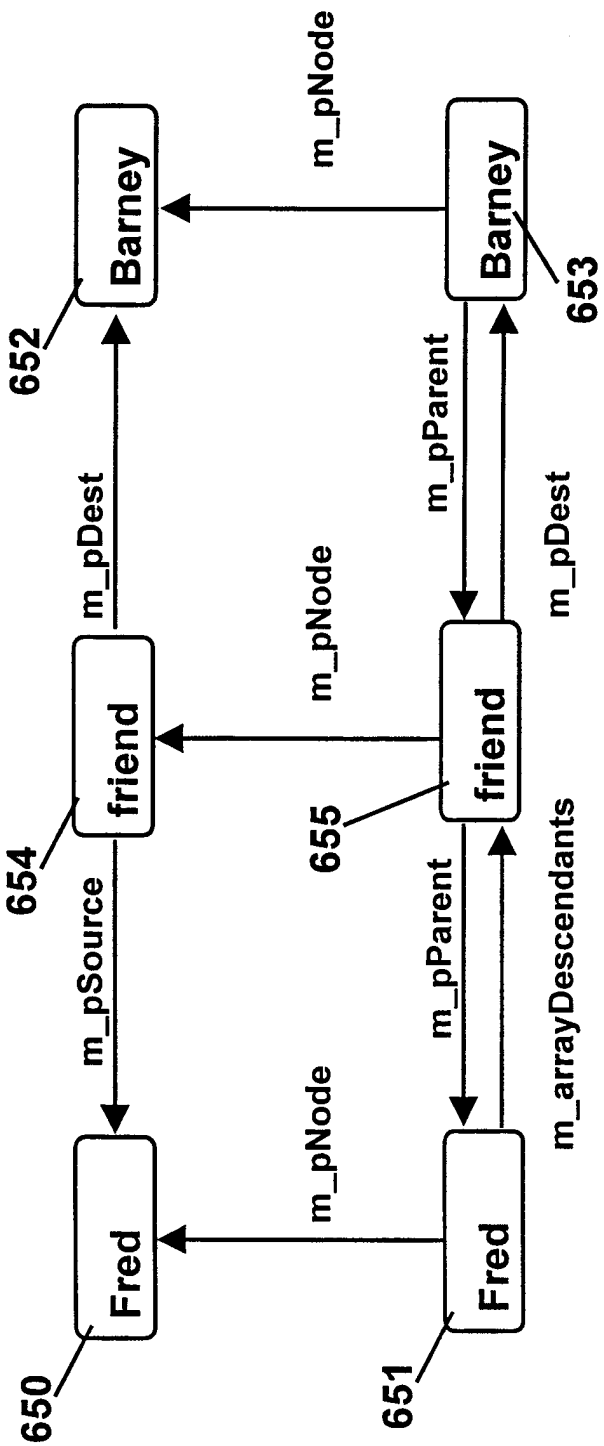
Barney
Barney
friend
friend
Fred
Fred
m_pNode
m_pDest
m_pNode
m_pParent
m_pDest
m_pSource
m_pNode
m_pParent
m_arrayDescendants
652
653
654
655
650
651

FIG. 6E

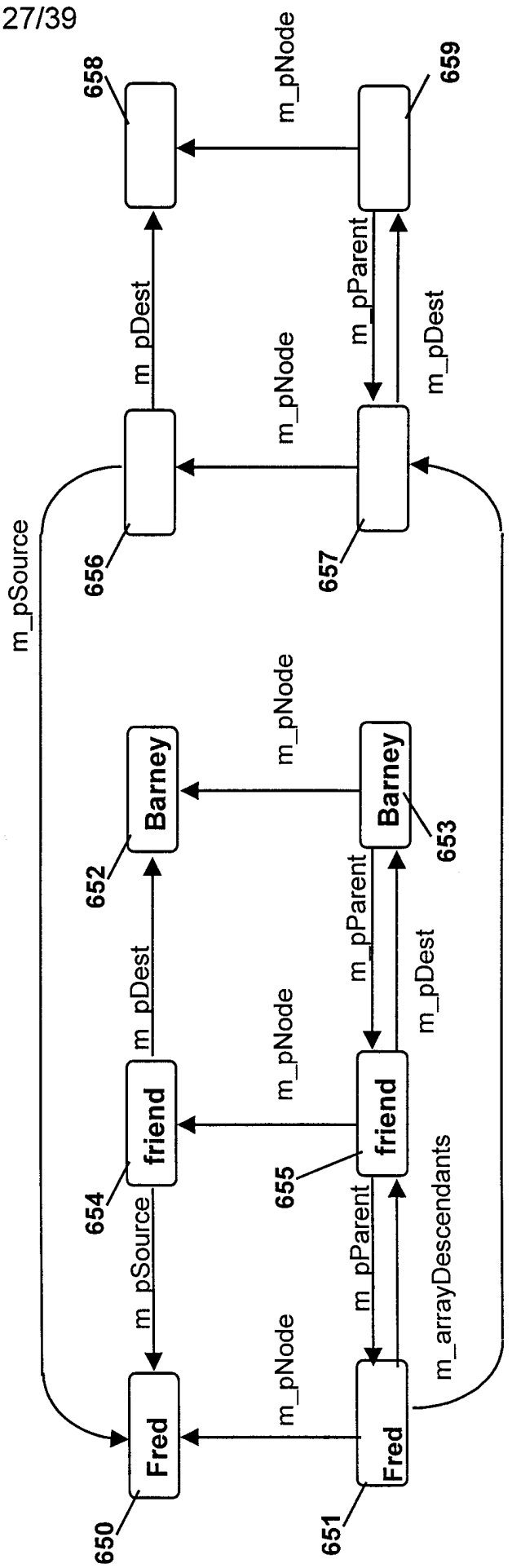
m_pSource
m_pNode
m_pNode
m_pNode
m_pNode
m_pNode
m_pNode
m_pDest
m_pDest
m_pDest
m_pDest
m_pSource
m_pParent
m_pParent
m_pParent
m_arrayDescendants
Fred
Fred
friend
friend
Barney
Barney
650
651
654
655
652
653
656
657
658
659

FIG. 6F

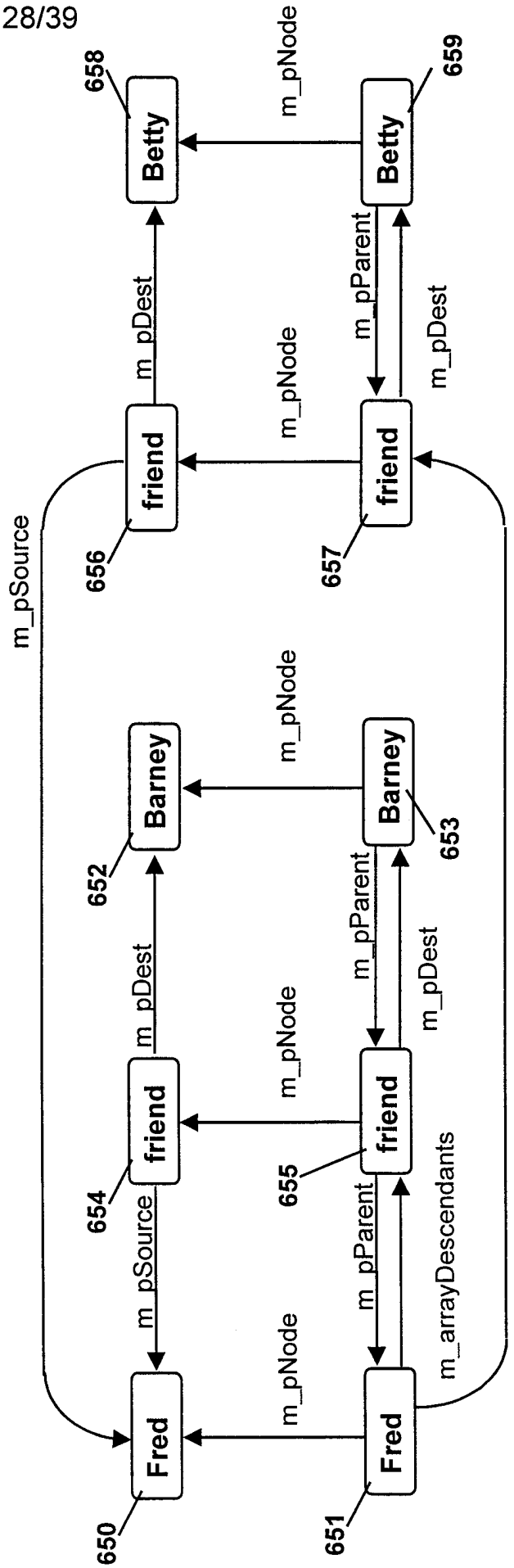
Fred
650
Fred
651
friend
654
friend
655
Barney
652
Barney
653
friend
656
friend
657
Betty
658
Betty
659
m_pSource
m_pNode
m_pDest
m_pNode
m_pParent
m_pNode
m_pDest
m_pNode
m_pSource
m_pNode
m_pParent
m_pNode
m_pDest
m_arrayDescendants

FIG. 6G

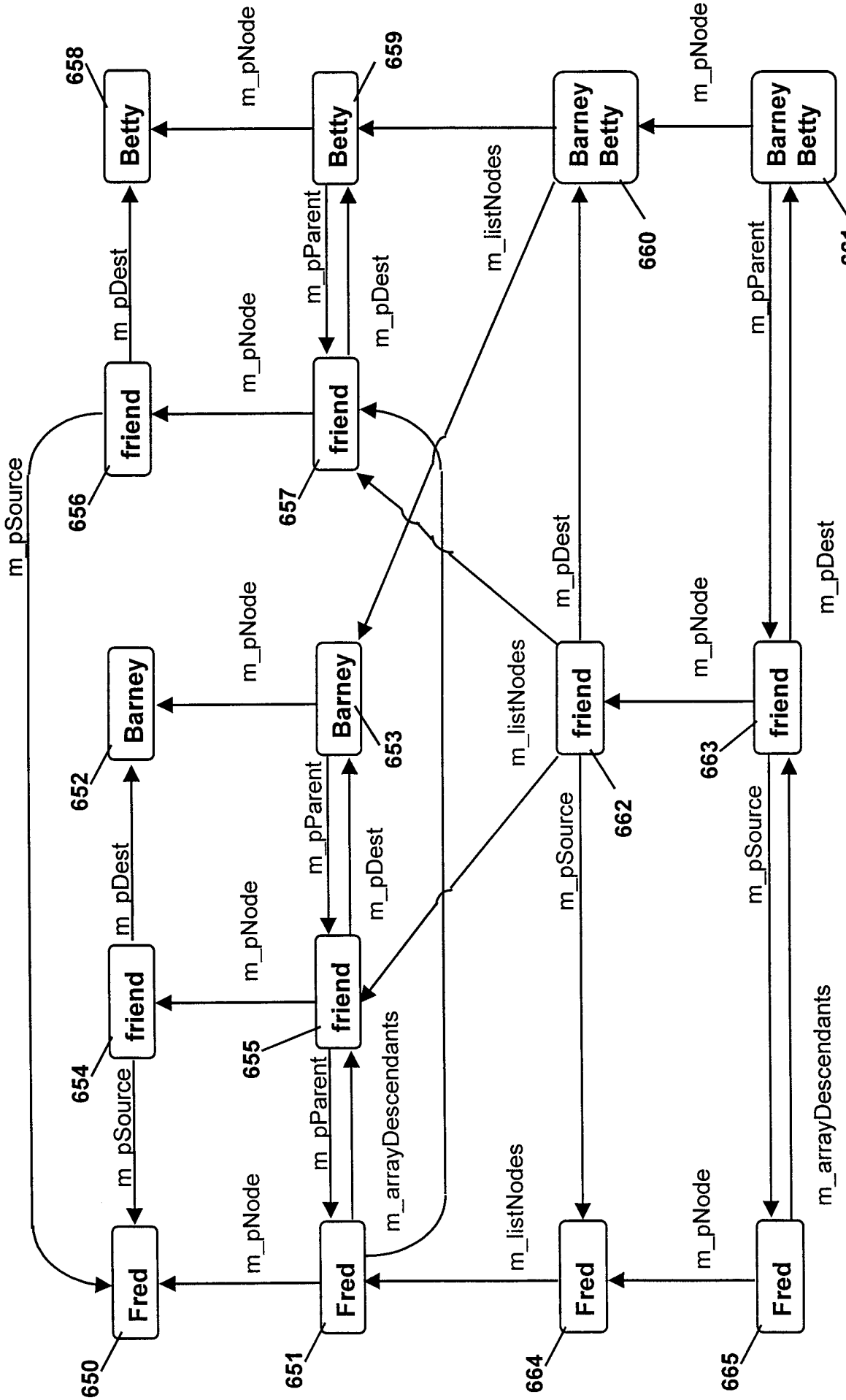
Fred
650
Barney
652
friend
654
Betty
658
friend
656
Fred
651
Barney
653
friend
655
Betty
659
friend
657
Fred
664
friend
662
Barney
Betty
660
Fred
665
friend
663
Barney
Betty
661
m_pSource
m_pDest
m_pNode
m_pParent
m_arrayDescendants
m_listNodes

FIG. 6H

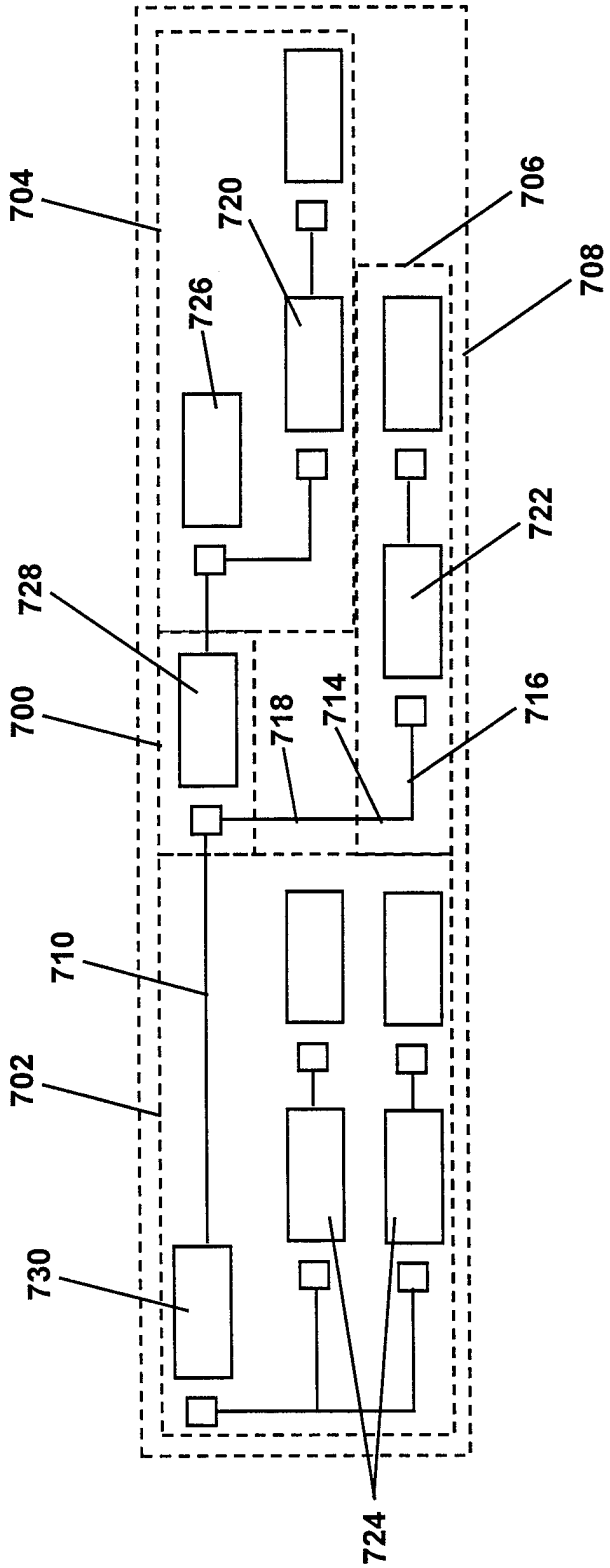

FIG. 7

FIG. 8A

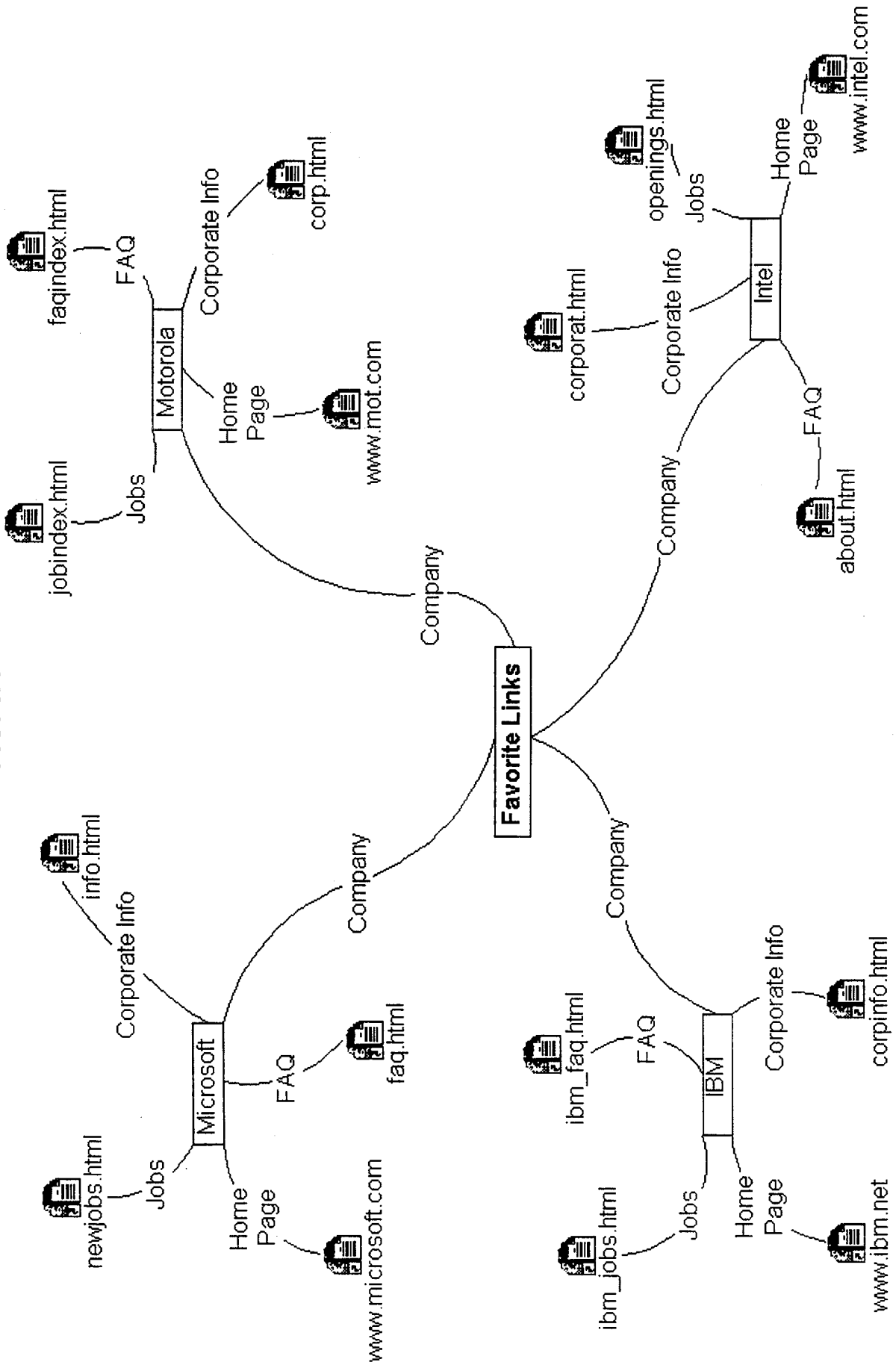
Favorite Links
Company
Company
Company
Company
Motorola
Jobs
FAQ
Corporate Info
Home Page
jobindex.html
faqindex.html
corp.html
www.mot.com
Microsoft
Jobs
FAQ
Corporate Info
Home Page
newjobs.html
info.html
faq.html
www.microsoft.com
Intel
Jobs
Corporate Info
FAQ
Home Page
openings.html
corporat.html
about.html
www.intel.com
IBM
Jobs
FAQ
Corporate Info
Home Page
ibm_jobs.html
ibm_faq.html
corpinfo.html
www.ibm.net

FIG. 8A

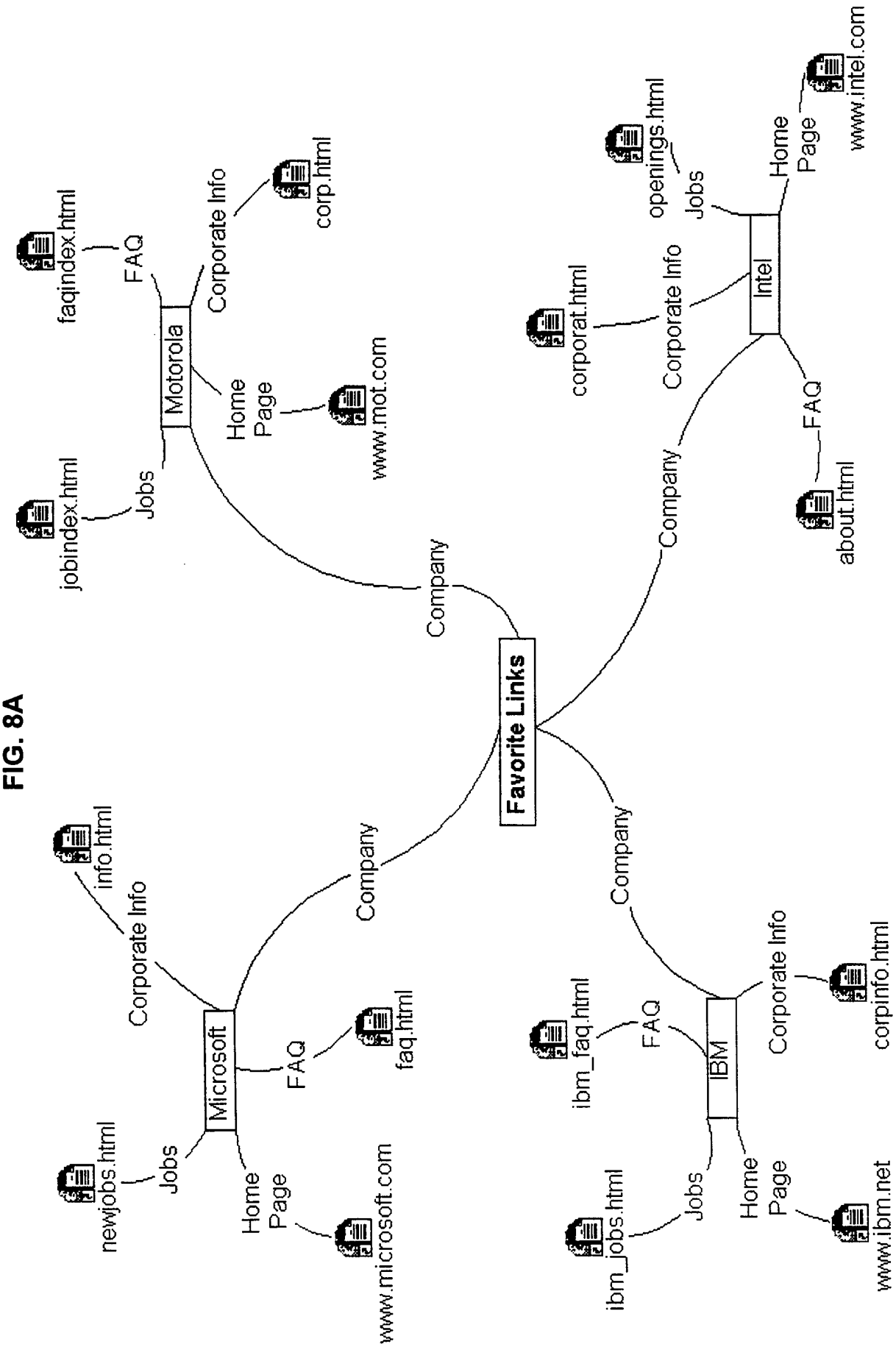
Favorite Links
Company
Company
Company
Company
Motorola
Jobs
FAQ
Corporate Info
Home Page
jobindex.html
faqindex.html
corp.html
www.mot.com
Microsoft
Jobs
FAQ
Corporate Info
Home Page
newjobs.html
info.html
faq.html
www.microsoft.com
Intel
Jobs
Corporate Info
FAQ
Home Page
openings.html
corporat.html
about.html
www.intel.com
IBM
Jobs
FAQ
Corporate Info
Home Page
ibm_jobs.html
ibm_faq.html
corpinfo.html
www.ibm.net

FIG. 9B

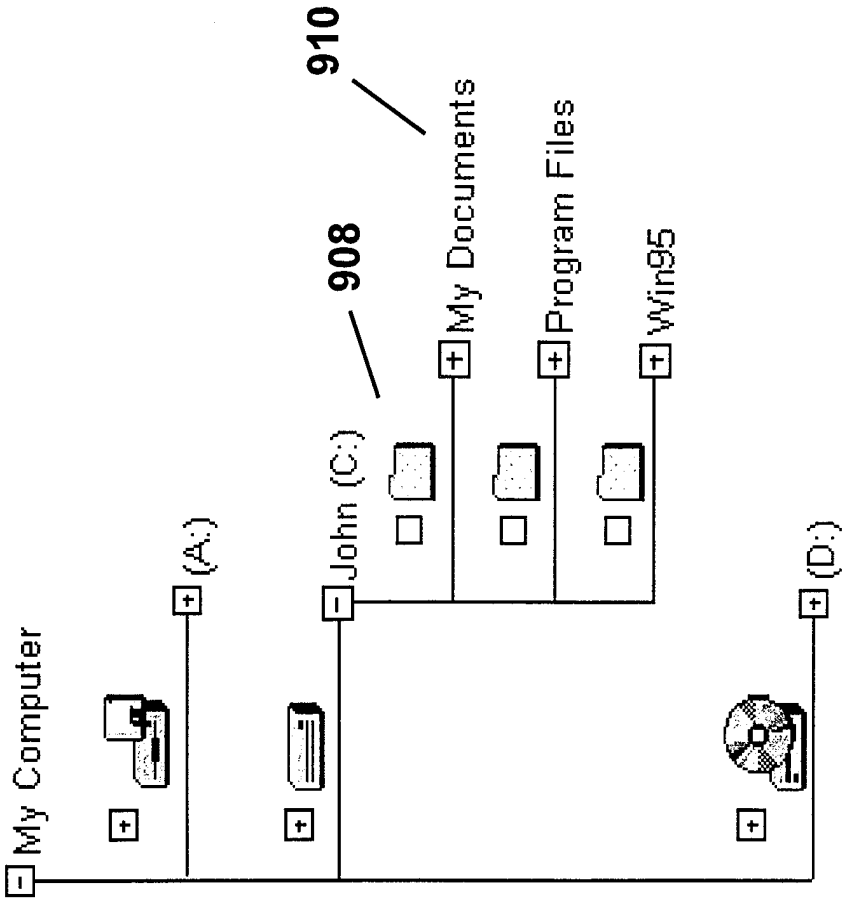
My Computer
(A:)
John (C:)
(D:)
908
910
My Documents
Program Files
Win95

FIG. 9A

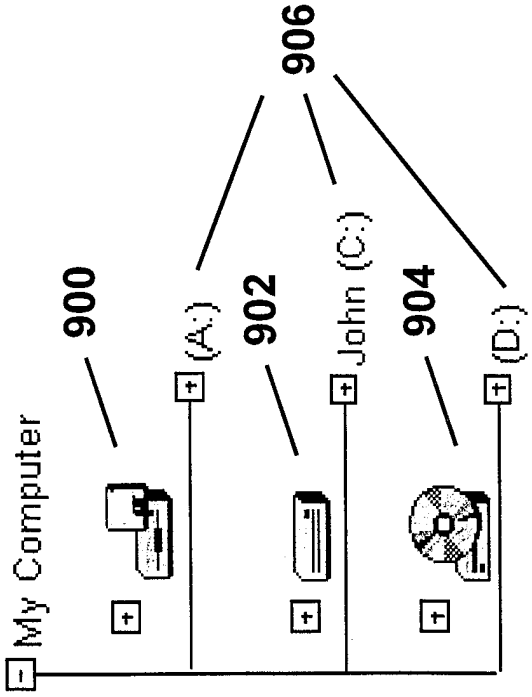
My Computer
900
(A:)
902
John (C:)
904
(D:)
906

FIG. 9D

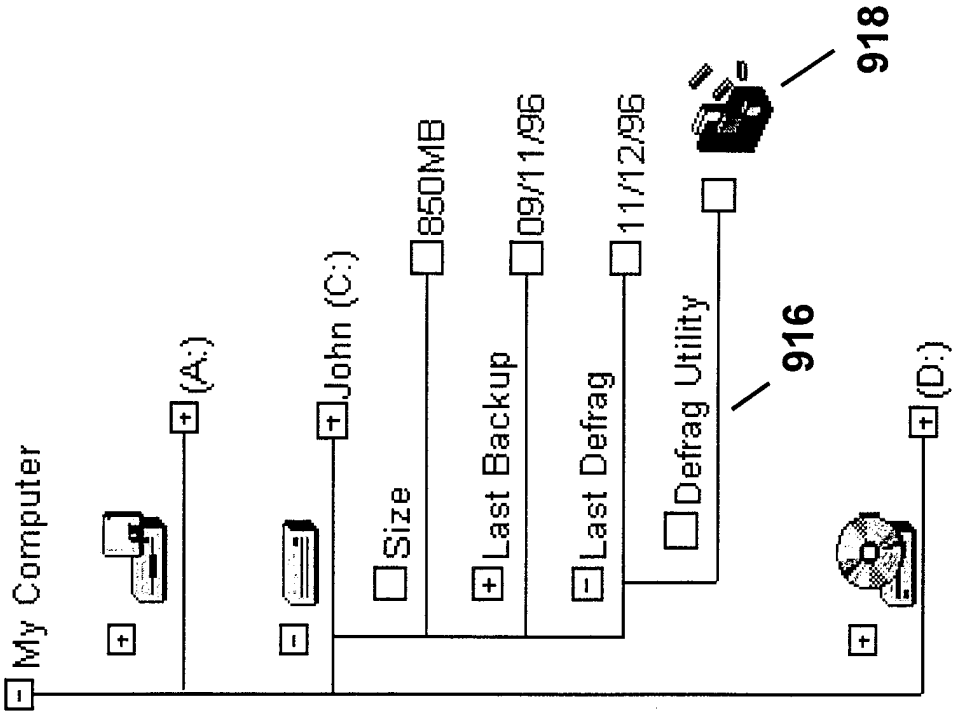
My Computer
(A:)
John (C:)
Size
850MB
Last Backup
09/11/96
Last Defrag
11/12/96
Defrag Utility
(D:)
916
918

FIG. 9C

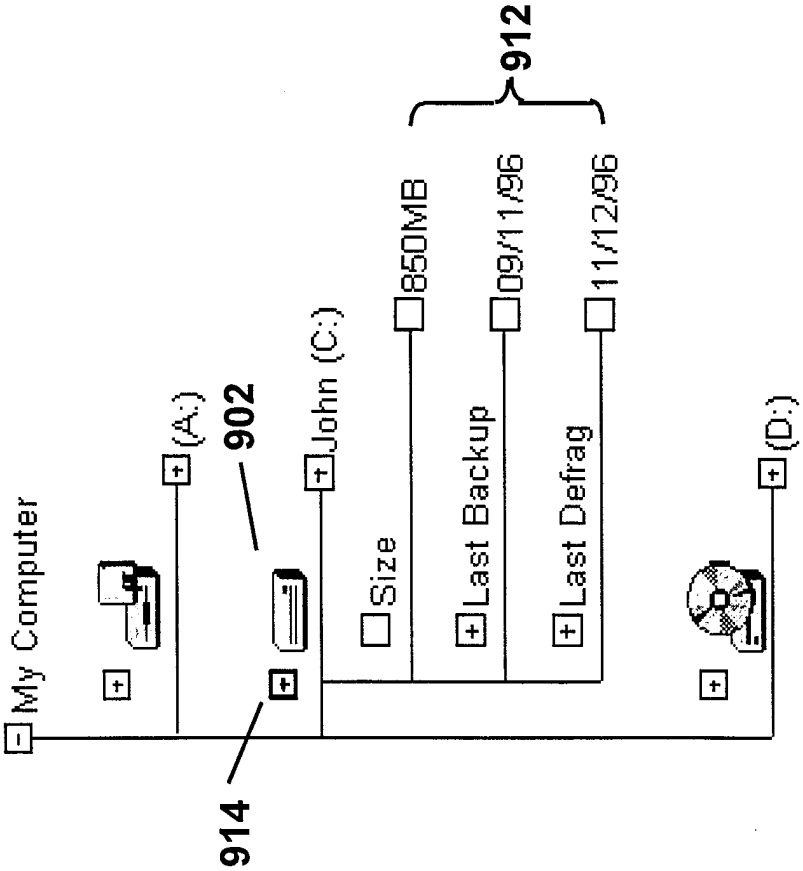
My Computer
(A:)
902
John (C:)
Size
850MB
Last Backup
09/11/96
Last Defrag
11/12/96
912
(D:)
914

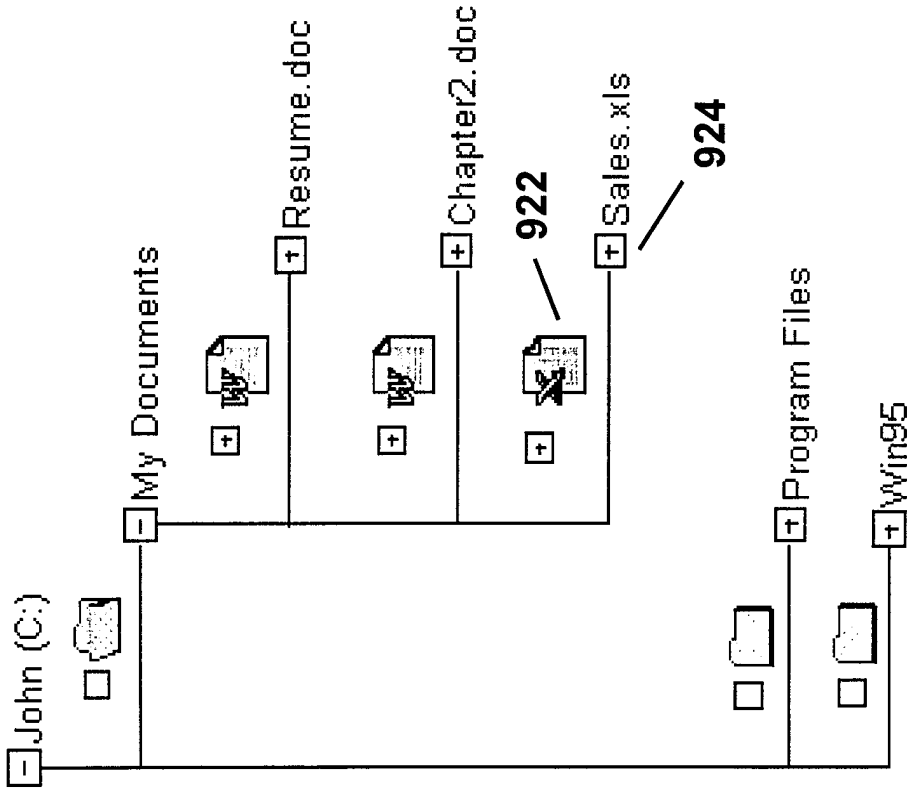
John (C:)
My Documents
Resume.doc
Chapter2.doc
922
Sales.xls
924
Program Files
Win95

FIG. 9F

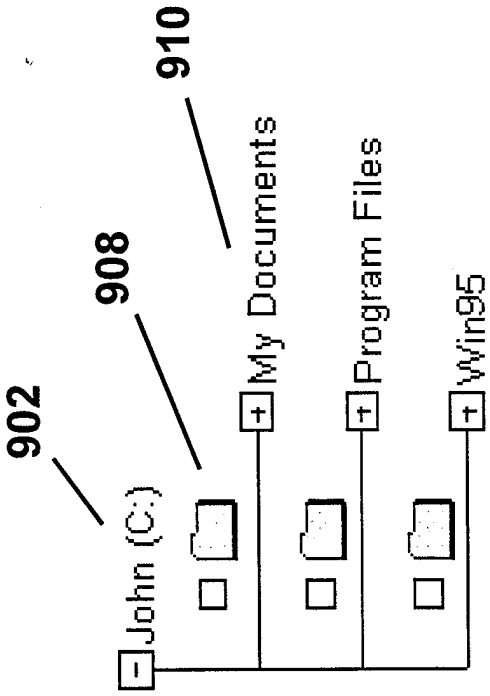
902
908
910
John (C:)
My Documents
Program Files
Win95

FIG. 9E

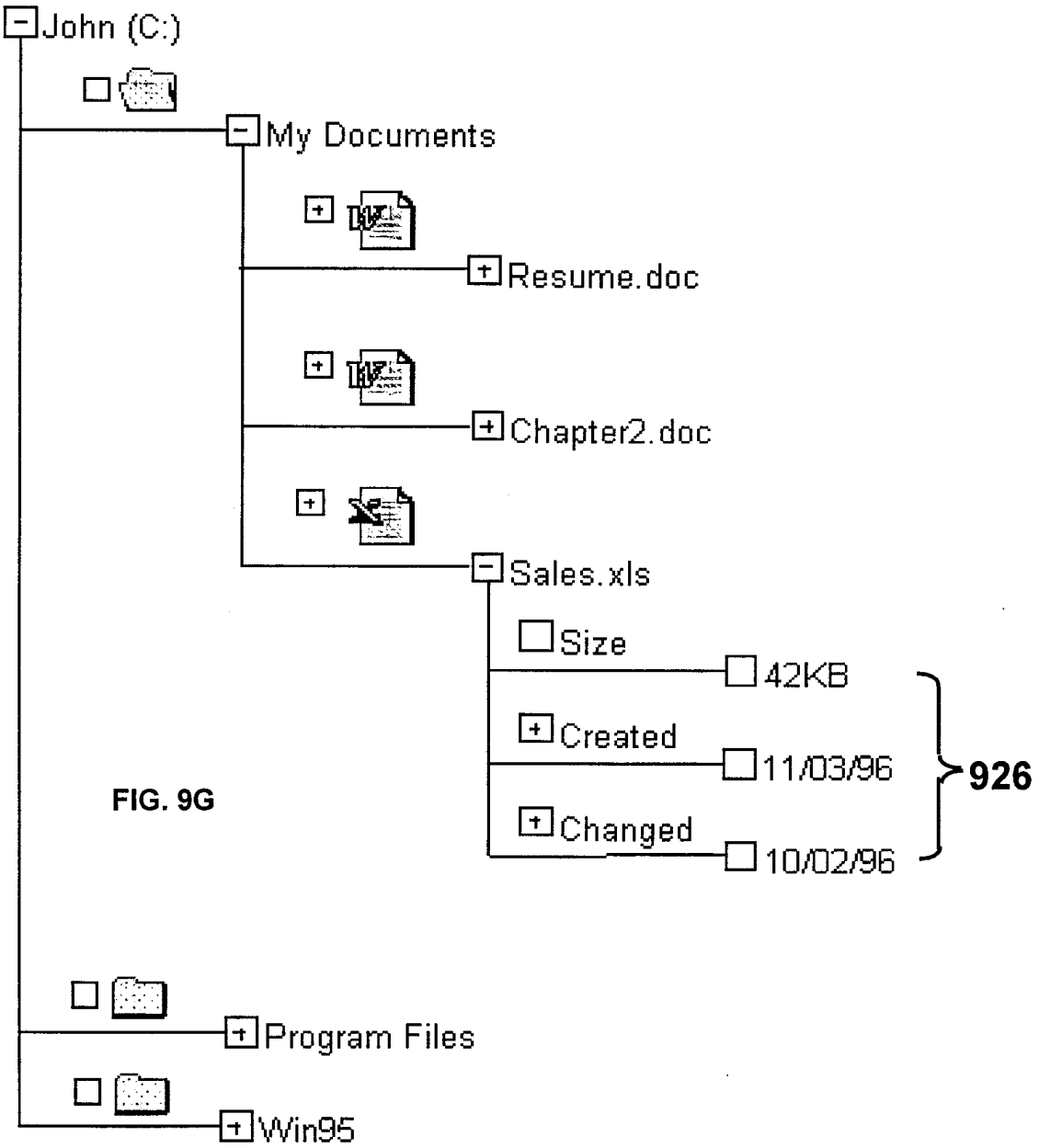
John (C:)
My Documents
Resume.doc
Chapter2.doc
Sales.xls
Size
42KB
Created
11/03/96
Changed
10/02/96
926
Program Files
Win95

FIG. 9G

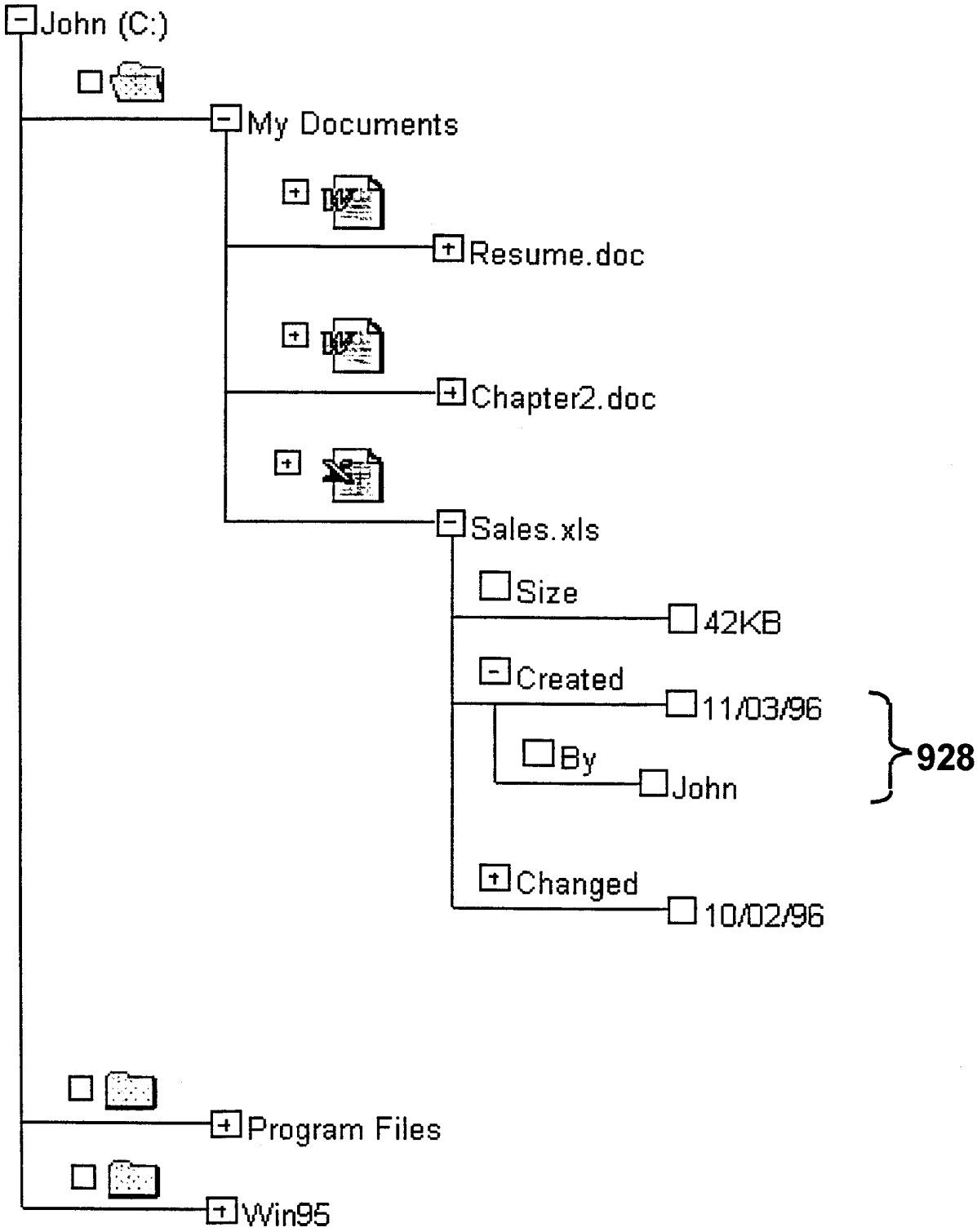
John (C:)
My Documents
Resume.doc
Chapter2.doc
Sales.xls
Size
42KB
Created
11/03/96
By
John
928
Changed
10/02/96
Program Files
Win95

FIG. 9H

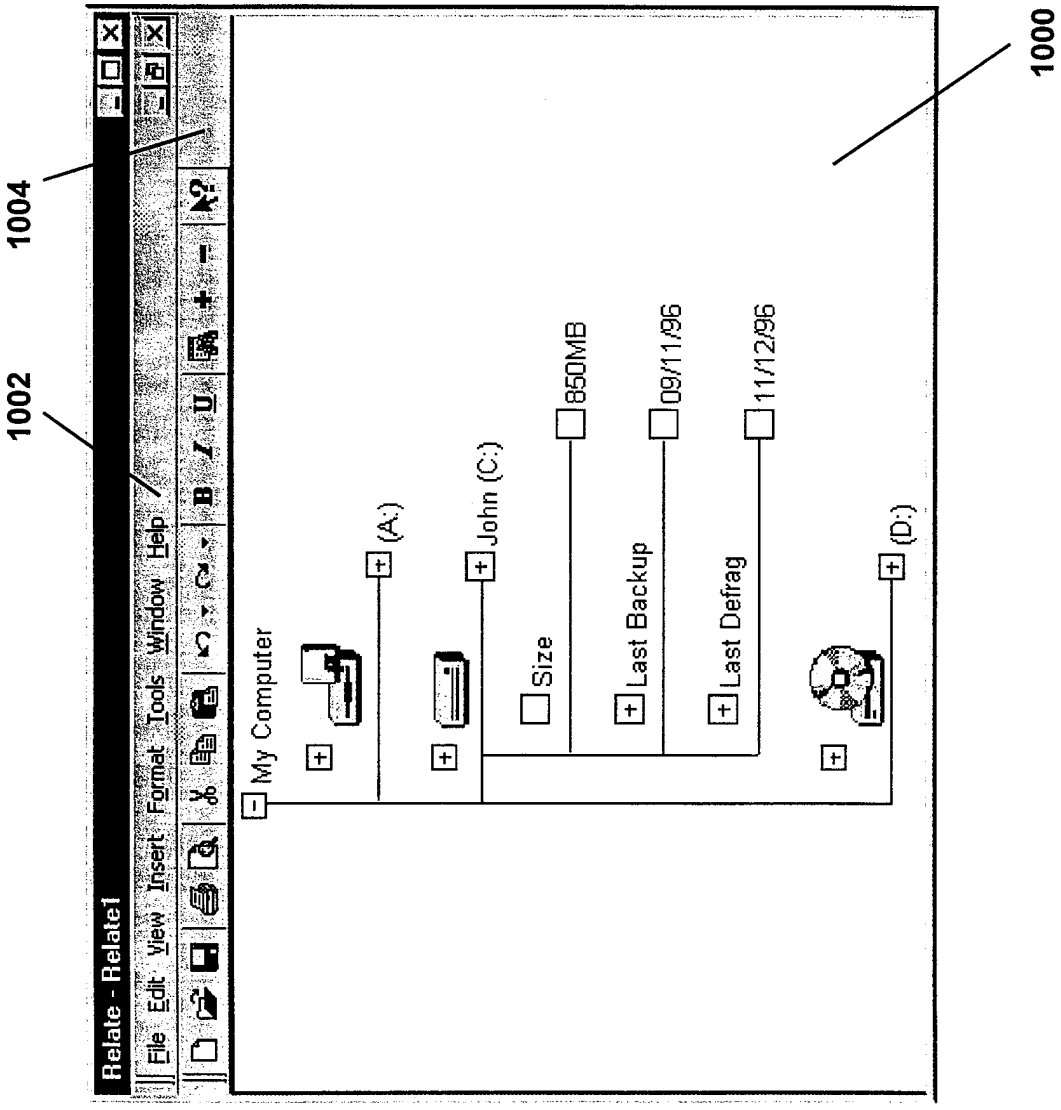
1004
1002
1000
Relate - Relate1
File Edit View Insert Format Tools Window Help
My Computer
(A:)
John (C:)
Size
850MB
Last Backup
09/11/96
Last Defrag
11/12/96
(D:)

FIG. 10A

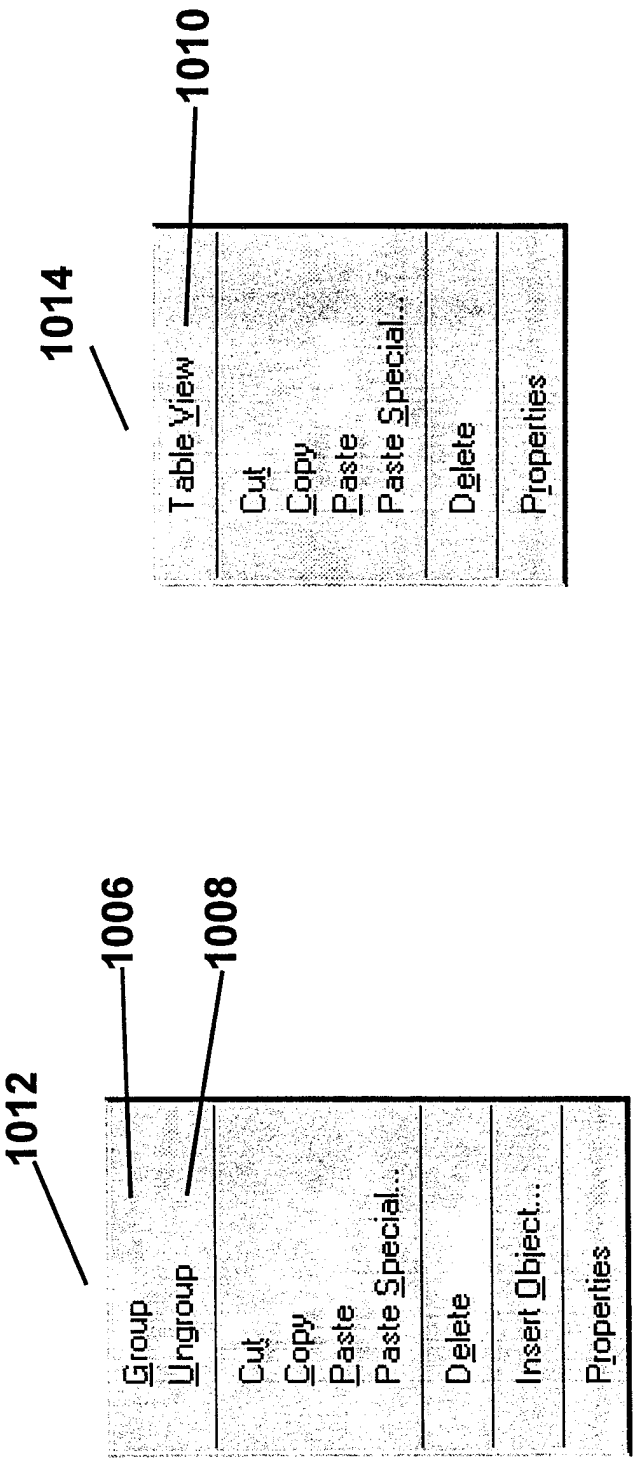
1014
Table View
Cut
Copy
Paste
Paste Special...
Delete
Properties
1010
1012
Group
Ungroup
Cut
Copy
Paste
Paste Special...
Delete
Insert Object...
Properties
1006
1008

FIG. 10B

INTERNATIONAL SEARCH REPORT

International application No.
PCT/IL97/00419

A. CLASSIFICATION OF SUBJECT MATTER

IPC(6) :G06F 15/18
US CL :706/55
According to International Patent Classification (IPC) or to both national classification and IPC

B. FIELDS SEARCHED

Minimum documentation searched (classification system followed by classification symbols)

U.S. : 706/55; 707/103; 345/419

Documentation searched other than minimum documentation to the extent that such documents are included in the fields searched

Electronic data base consulted during the international search (name of data base and, where practicable, search terms used)

APS, CAS ONLINE, PROQUEST

C. DOCUMENTS CONSIDERED TO BE RELEVANT

Category*	Citation of document, with indication, where appropriate, of the relevant passages	Relevant to claim No.
A	US 5,630,125 A (ZELLWEGER) 13 May 1997, See Abstract.	1-10
A	US 5,452,468 A (PETERSON) 19 September 1995	1-10

☐ Further documents are listed in the continuation of Box C. ☐ See patent family annex.

*	Special categories of cited documents:	"T"	later document published after the international filing date or priority date and not in conflict with the application but cited to understand the principle or theory underlying the invention
"A"	document defining the general state of the art which is not considered to be of particular relevance	"X"	document of particular relevance; the claimed invention cannot be considered novel or cannot be considered to involve an inventive step when the document is taken alone
"E"	earlier document published on or after the international filing date	"Y"	document of particular relevance; the claimed invention cannot be considered to involve an inventive step when the document is combined with one or more other such documents, such combination being obvious to a person skilled in the art
"L"	document which may throw doubts on priority claim(s) or which is cited to establish the publication date of another citation or other special reason (as specified)	"&"	document member of the same patent family
"O"	document referring to an oral disclosure, use, exhibition or other means		
"P"	document published prior to the international filing date but later than the priority date claimed		

Date of the actual completion of the international search	Date of mailing of the international search report
29 MARCH 1998	27 APR 1998
Name and mailing address of the ISA/US Commissioner of Patents and Trademarks Box PCT Washington, D.C. 20231 Facsimile No. (703) 305-3230	Authorized officer for SANJIV SHAH Telephone No. (703) 305-8355

Form PCT/ISA/210 (second sheet)(July 1992)★