C. B. HALE.

ESCAPEMENT MECHANISM.

APPLICATION FILED OCT. 28, 1911.

**1,068,764.**

Patented July 29, 1913.

4 SHEETS—SHEET 1.

Fig. 1.

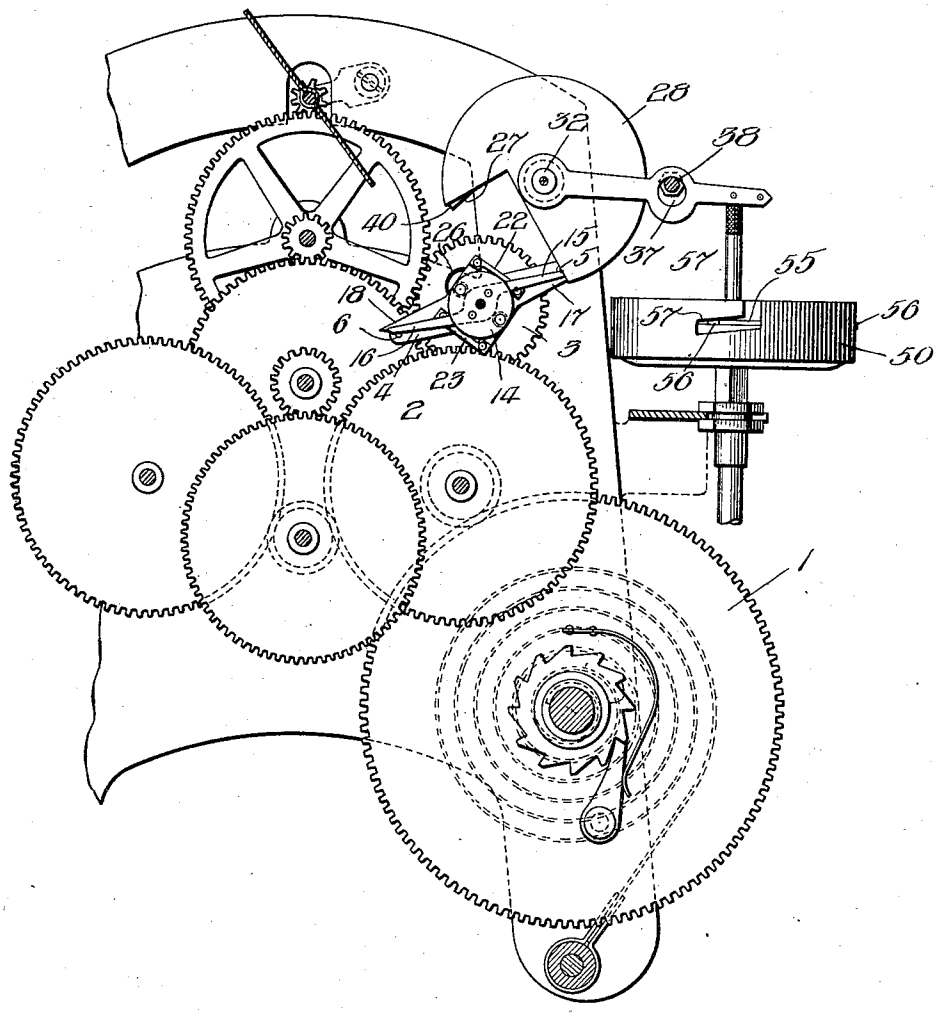


Witnesses:

Harry S. Gaither

Roby V. Rydges.

Inventor:

Charles Ballard Hale

By Chamberlin Brendenwick,

Attys.

COLUMBIA PLANOGRAPH CO., WASHINGTON, D. C.

C. B. HALE.

ESCAPEMENT MECHANISM.

APPLICATION FILED OCT. 28, 1911.

**1,068,764.**

Patented July 29, 1913.

4 SHEETS—SHEET 2.

Fig. 2.

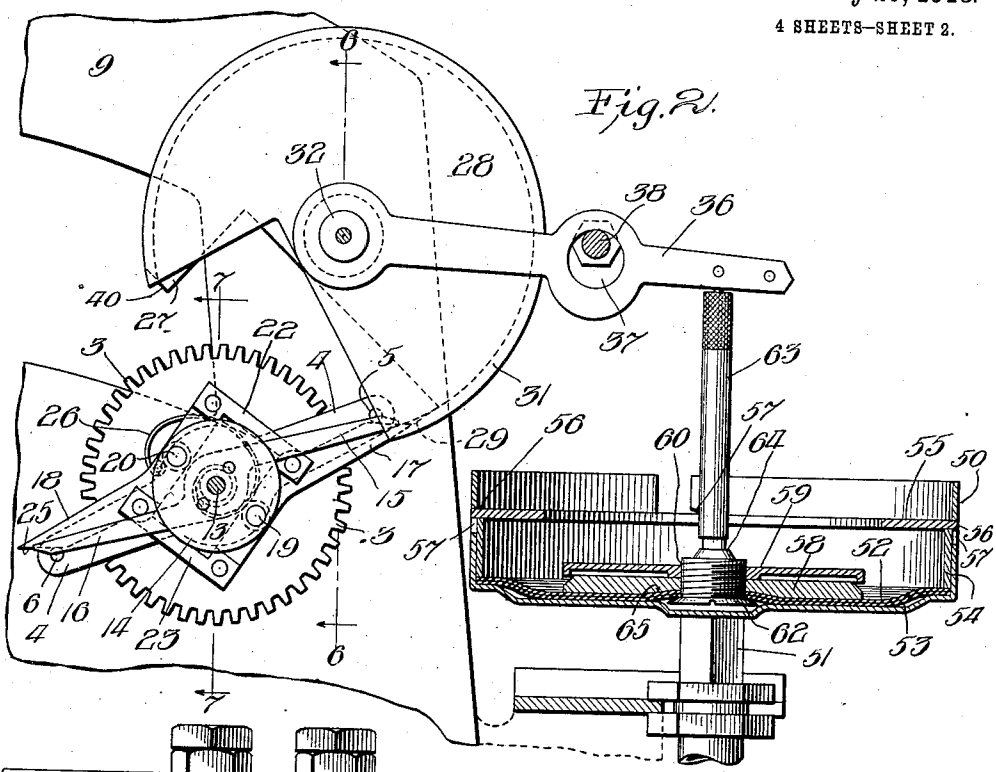


Fig. 3.

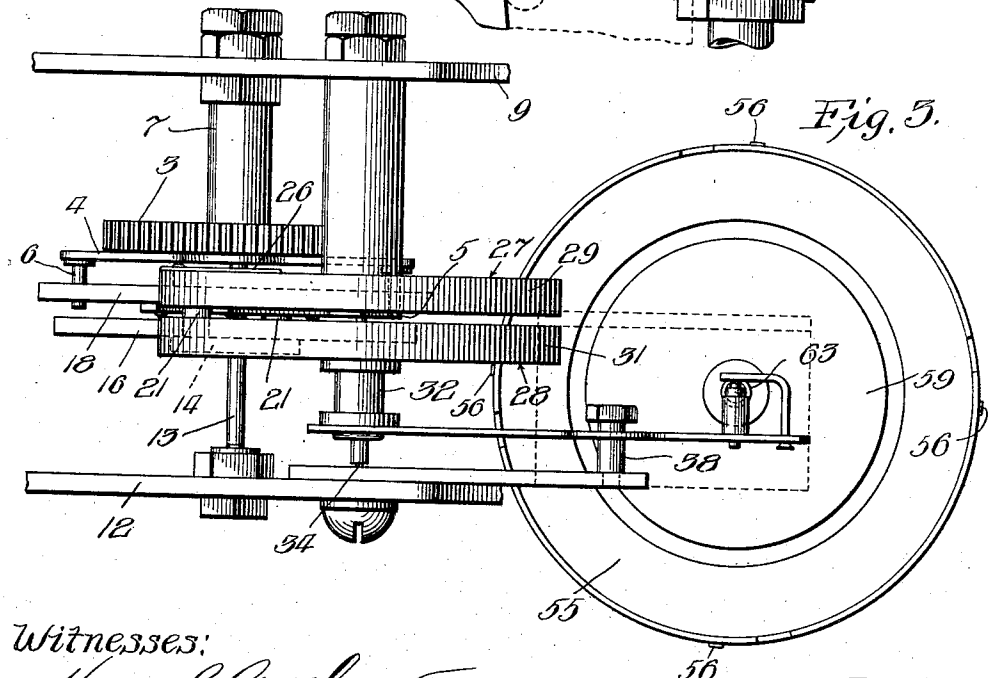


Witnesses:

Harry S. Gaither

Ruby V. Brydges.

Inventor:

Charles Ballard Hale,

By Chamberlin Brandenburg Attys

COLUMBIA PLANOGRAPH CO., WASHINGTON, D. C.

C. B. HALE.

ESCAPEMENT MECHANISM.

APPLICATION FILED OCT. 28, 1911.

**1,068,764.**

**Patented July 29, 1913.**

4 SHEETS—SHEET 3.

Fig. 4.

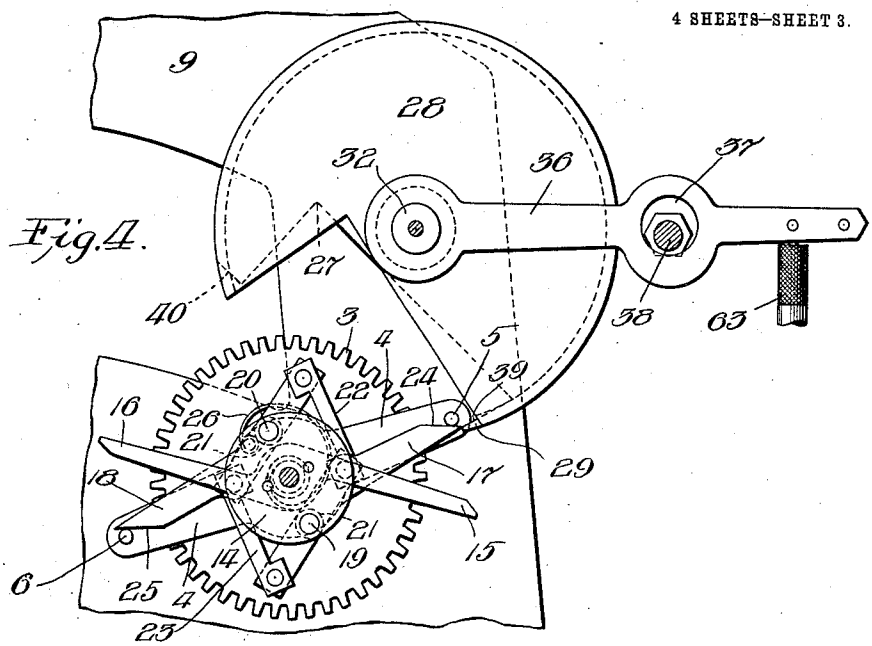


Fig. 5.

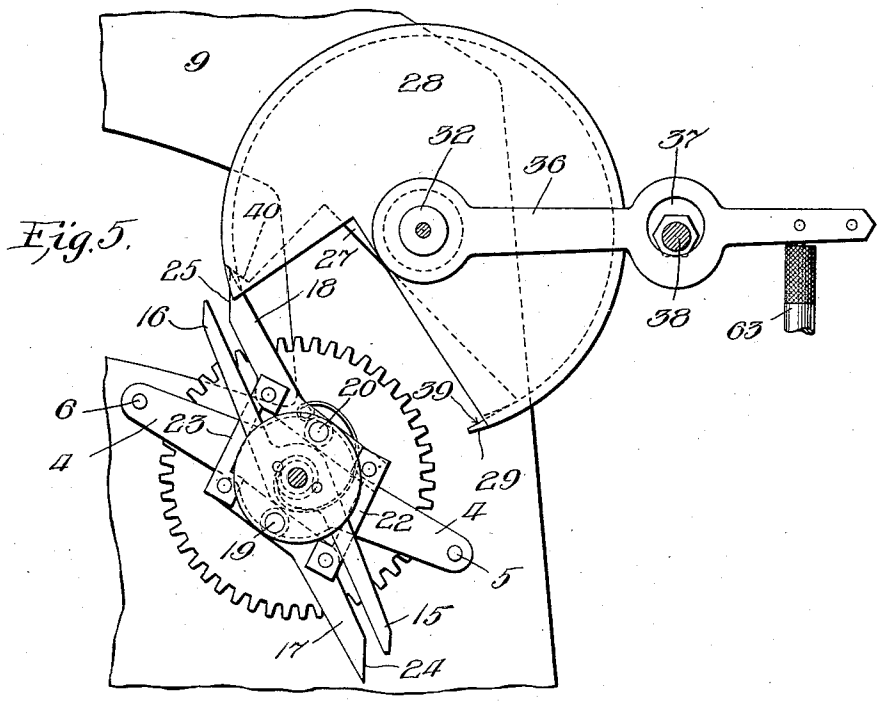


Witnesses:
Harry S. Gaither
Ruby V. Brydges.

Inventor:
Charles Ballard Hale,
By Chamberlin & Prendergast,
Attys.

COLUMBIA PLANOGRAPH CO., WASHINGTON, D. C.

C. B. HALE.

ESCAPEMENT MECHANISM.

APPLICATION FILED OCT. 28, 1911.

**1,068,764.**

Patented July 29, 1913.

4 SHEETS—SHEET 4.

Fig. 6.

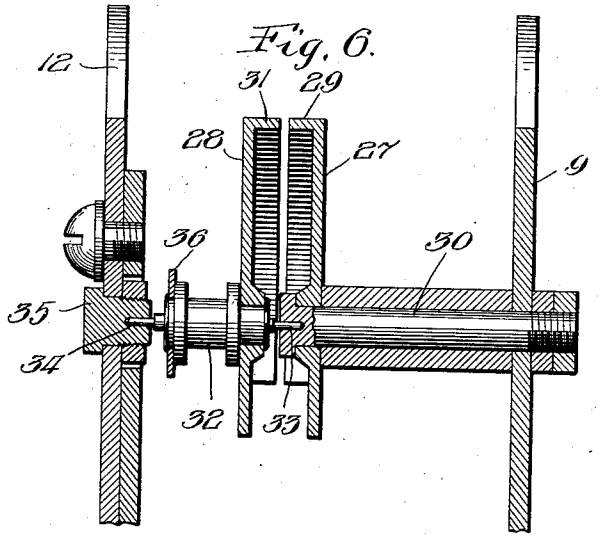


Fig. 7.

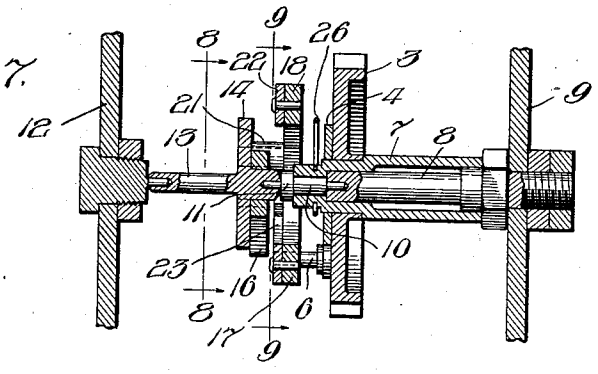


Fig. 8.

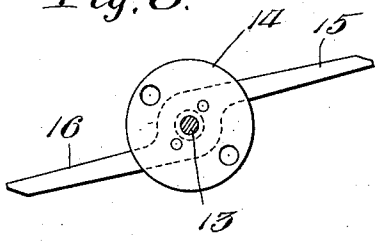


Fig. 9.

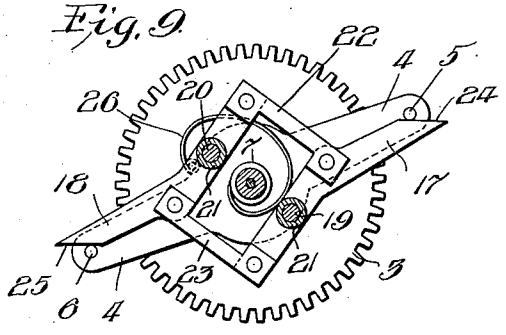


Witnesses:

Harry S. Gaither

Ruby V. Brydges.

Inventor:

Charles Ballard Hale,

By Chamberlin Brendemuehl,

Attys.

COLUMBIA PLANOGRAPH CO., WASHINGTON, D. C.

# UNITED STATES PATENT OFFICE.

CHARLES BALLARD HALE, OF PARK RIDGE, ILLINOIS, ASSIGNOR TO HAHL AUTOMATIC CLOCK COMPANY, OF CHICAGO, ILLINOIS, A CORPORATION OF ILLINOIS.

## ESCAPEMENT MECHANISM.

1,068,764. Specification of Letters Patent. **Patented July 29, 1913.**

Application filed October 28, 1911. Serial No. 657,372.

*To all whom it may concern:*

Be it known that I, CHARLES B. HALE, a citizen of the United States, residing at Park Ridge, county of Cook, State of Illinois, have invented a certain new and useful Improvement in Escapement Mechanism, and declare the following to be a full, clear, and exact description of the same, such as will enable others skilled in the art to which it pertains to make and use the same, reference being had to the accompanying drawings, which form a part of this specification.

My invention has for its object to produce a sensitive escapement mechanism.

A further object of my invention is to produce an escapement mechanism which is not dependent upon the power of the spring or other motor which it controls for its sensitiveness, reliability and efficiency.

A further object of my invention is to produce a simple and novel escapement mechanism which may be controlled by a pressure or force sufficient only to overcome the tension of a weak spring forming part of the mechanism itself.

A further object of my invention is to produce an escapement mechanism in which the blows are reduced to a minimum.

The various features of novelty whereby my invention is characterized will hereinafter be pointed out with particularity in the claims; but, for a full understanding of my invention and of its various objects, including among others those heretofore enumerated, reference may be had to the following detailed description taken in connection with the accompanying drawings, wherein:

Figure 1 is a side elevation of a portion of a spring motor and gear train to which my escapement is applied, the front plate being omitted for the sake of clearness; Fig. 2 is a side elevation on an enlarged scale of the escapement itself, a pneumatic controlling device therefor being shown in cross section; Fig. 3 is a plan view of the parts shown in Fig. 2; Figs. 4 and 5 are views similar to Fig. 2 showing different positions of the parts; Fig. 6 is a section on line 6—6 of Fig. 2; Fig. 7 is a section on line 7—7 of Fig. 2; Fig. 8 is a section on line 8—8 of Fig. 7, only the element in the immediate foreground being shown; and Fig. 9 is a section on line 9—9 of Fig. 7.

Referring to the drawings, 1 represents a motor, in the present instance a spring motor, and 2 a train of gearing driven by the motor.

My invention is not limited to any particular type of motor mechanism and I have simply shown one of the clock train order since it is to this form that my invention will usually be applied.

Mounted on one of the members driven by the motor, in the present instance one of the gears 3 of the train, is a bar 4 which is provided at diametrically opposed points located at equal distances from the axis of rotation with pins 5 and 6, these pins being adapted to be engaged by suitable stop devices to be hereinafter described for the purpose of arresting the motor and permitting it to operate when and as desired. In the arrangement shown the gear wheel 3 is fixed upon a sleeve 7 (see Fig. 7) which revolves about a stud 8 rigidly secured to the back plate 9 of the gear train. The sleeve is held in place on the stud by means of a member 10 which is driven into the end of the stud and is provided with an enlargement or shoulder 11 bearing against the outer end of the sleeve. By this arrangement any lateral thrust comes either directly upon the stud or upon the member 10 which is rigidly connected with the stud and the delicate parts of the escapement mechanism which are arranged adjacent to the gear wheel 3 are protected against strains due to a lateral thrust on the gear wheel. Between the member 10 and the front plate 12 of the gear train is mounted a shaft 13 whose axis is coincident with the axis of the gear wheel. Adjacent to the end of the shaft 13 nearest the gear wheel is a small disk 14 which forms part of or is rigidly secured to the shaft. The disk is provided with two fingers 15 and 16 which project in opposite directions therefrom in planes at right angles to the axis of the shaft. As will be best seen from Figs. 7 and 9 there are arranged between the disk and the gear wheel two arms 17 and 18, each of these being pivotally connected between its ends to the disk, being preferably mounted on studs

19 and 20 which project from the disk toward the gear wheel and lie parallel to the main axis of rotation. The arms may be held out of contact with the disk by means of sleeves or spacers 21 surrounding the studs 19 and 20. The two arms are connected together by means of links 22 and 23 which are of equal lengths and form with the portions of the arms lying between them a flexible parallelogram which is pivotally connected to the disk at the points where one of the axes of the parallelogram intercepts two of its sides. Each of the arms 17 and 18 has a portion which extends outwardly beyond the parallelogram, the free ends of the two arms extending in opposite directions. The free end of each of the arms is made wedge-shaped as indicated at 24 and 25 and the parts are so proportioned that when the parallelogram assumes a rectangular form the wedge-shaped faces on the arms lie in the paths of the pins 5 and 6 on the member 4 so that if the arms are brought to rest while the motor train is running, the pins will engage with the inclined portions of the arms and will come to rest, thus stopping the motor.

A light spiral spring 26 is secured at its inner end to the sleeve 7 and at its outer end to one of the arms, in the arrangement shown, the arm 18. As viewed in Fig. 9, the spring, when under tension, tends to move the arms 17 and 18 in the clockwise direction in which the gear wheel is driven by the motor. It will thus be seen that when the spring is under tension and is free to do so, it will carry the arms forward ahead of the pins 5 and 6. Similarly, whenever the gear wheel is rotating with the pins 5 and 6 behind the arms and the arms are arrested, the gear wheel continues to travel until the pins strike the arms and, during this travel winds up the spring. Since the arms 17 and 18 are pivotally mounted upon the disk 14, the disk will be caused to rotate, when otherwise free, whenever the spring 26 unwinds. It will also be seen that if the outer ends of the arms 17 and 18 are held so as to prevent them from rotating about the main axis, but are left free to move in the radial direction, and the disk 14 is free to rotate, the spring will turn the disk, producing a distortion of the rectangle formed by the arms of the links 23 and 24 and causing the outer ends of the arms to be drawn in toward the center. I make use of this peculiar movement of the arms 17 and 18 by providing an abutment or abutments for engaging the arms 17 and 18 when it is desired to lock the motor, the action of the motor being resisted by such abutment or abutments; and I provide a further device which cooperates with the fingers 15 and 16 so as to hold the disk against rotation. It will be seen that the force required to hold the disk against rotation need only be great enough to resist the unwinding action of the small spiral spring 26 so that the releasing mechanism which acts upon the fingers 15 and 16 is opposed only by the small spiral spring and the power of the main motor is therefore not a factor which must be taken into consideration.

The abutments to which I referred are carried by or from part of two anchors mounted in the planes in which the arms 17 and 18 and the fingers 15 and 16 rotate, there being a stationary anchor 27 for cooperation with the arms 17 and 18 and a movable anchor 28 for coöperation with the fingers 15 and 16. These anchors may take various forms, preferably that of a segment of a disk as illustrated. The stationary anchor 27 comprises a segment of a disk having a flange 29, the disk being rigidly mounted on a stud 30 secured to the back plate 9. The anchor 28 is also made of a segment of a disk having a flange 31, the flanges 29 and 31 being directed toward each other. The anchor 28 is rigidly secured upon a short shaft 32 having a bearing 33 in the inner end of the stud 30 and a bearing 34 in the front plate 12 or in an adjustable member 35 carried by the front plate. Secured to the member 32 is a radial arm 36 which projects out beyond the peripheries of the anchors and is adapted to be actuated in any suitable way for the purpose of oscillating the movable anchor about its axis. In the arrangement shown, the arm 36 has an opening 37 therein and a pin 38 passing through this opening and secured to the front plate 12 limits the oscillatory movement of the anchor. The anchors are so disposed that the mutilated sections of the disks and flanges lie opposite the portions of the escapement mechanism which I have heretofore described; the sections which are cut away from the anchors being so proportioned that the axis of the anchors and the axis of the gear wheel 3 form the ends of the diagonal of a rectangle whose other diagonal extends from a point just above the upper corners of the anchors to a point just within the flanges at the lower corners of the anchors. This arrangement, together with the peculiar disposition of the fingers 15 and 16 and the arms 17 and 18, permits one of the fingers and one of the arms, when lying upon the flanges of the anchors at the lower ends of the anchors in the normal positions of the parts, to lie substantially at right angles to the radius extending from the axis of the anchors to the points of contact, and consequently there is no component of the force which tends to rotate the fingers and the arms which has any turning influence on either of the anchors.

Viewed in another aspect, the condition is such that the point on the movable anchor which engages with one of the fingers is carried by the anchor in a direction substantially at right angles to the direction in which the coöperating point on the finger tends to move when the anchor is oscillated to release the finger. The same condition obtains when the arms and fingers have moved through an agle of 90 degrees and come in contact with the abutments or engaging surfaces at the upper end of the anchors. Consequently the only force which it is necessary to overcome in oscillating the movable anchor is the frictional resistance between the anchor and the finger which happens to be in contact with it at the time and therefore the control of the escapement is extremely sensitive.

The operation is as follows: Fig. 2 shows the normal condition of the parts when the motor is arrested or locked, one of the fingers, in the present instance the finger 15, resting on the flange 31 of the anchor 28 and the free end of one of the arms, in the present instance the arm 17, resting upon the flange 29 of the stationary anchor. The pin 5 which is rigidly connected with the gear wheel 3 rests upon the inclined end 24 of the arm 17. When the controlling arm 36 is raised, the movable anchor is turned into the position indicated in Fig. 4, carrying the flange of the movable anchor away from beneath the finger 15 and permitting a partial rotation of the disk 14. The rotation of the disk 14 begins as soon as the finger 15 is released, for as I have heretofore explained, the arms 17 and 18, being pivoted on the disk, are free to shift their angular positions on the disk and therefore even though the arm 17 is prevented from rotating bodily with the finger 15, it does not prevent a rotation of the disk. As the disk begins to rotate, the outer end of the finger 17 is drawn inwardly toward the axis of the disk until it is clear of the end of the flange 29; Fig. 4 illustrating the condition of the parts just as the arm 17 is about to leave the stationary anchor. Up to this point the motor has not been released because the inclined end of the arm 17 has acted as a stop upon which the pin 5 rested. As soon, however, as the arm 17 is freed from the stationary anchor, the motor is free to operate and the gear 3 to turn. The gear 3 turns slowly so that the arms of the escapement mechanism, being acted upon directly by the light spiral spring, are thrown around quickly until the arm 18 and the finger 16 engage with the upper abutments of the anchor. When this occurs the fingers and the arms are arrested and remain stationary until the movable anchor has been returned to its original position. If this condition lasts long enough the gear wheel will catch up with the escapement mechanism and the pin 6 will be brought to rest by coming into engagement with the inclined surface 25 on the end of the arm 18. When the movable anchor returns to its original position, first the finger 16 and then the arm 18 are released in the manner heretofore described in connection with the other arm and finger, and they travel through 90 degrees until again arrested in the position indicated in Fig. 2, the gear wheel following until its pin 6 again strikes the arrested arm 18.

It will be seen that the fingers and the arms of the escapement mechanism are moved quickly by the spring 26 when the fingers and the arms are released. Consequently these members obtain a considerable momentum and will continue to travel through a considerable angle after the action of the spring ceases. Advantage may be taken of this characteristic to permit the fingers and arms to strike the anchors gently; constructing the spring in such a manner that its effective tension will cease just before the fingers and arms strike the anchors and permitting the remainder of the travel of the fingers and the arms to be accomplished through their own momentum. Furthermore, the arms will overtake the fingers as they pass from the position shown in Fig. 4 to that shown in Fig. 5 so that one of the arms strikes its anchor shortly before the corresponding finger comes into contact with its anchor, this condition being illustrated in Fig. 5. The result of this is to divide whatever blow there may be into two parts, making the shock less than would be the case if the fingers and the arms reached their destinations simultaneously.

In order to make the actuation of the arms entirely independent of the tension or power of the main motor, I prefer to shape the abutting surfaces on the stationary anchor in such a manner as to provide what may be termed an "unlocking" angle with the arms. To this end the upper surface of the flange at the lower end of the stationary anchor is beveled as indicated at 39, and the portion at the upper end of the stationary anchor which is engaged by the arms is beveled as indicated at 40. The disposition of the surfaces 39 and 40 is such that the arms begin to travel slightly so as to follow the fingers as soon as the arms begin to withdraw toward the axis of rotation. In other words, the arms begin to move away from the pins on the gear wheel as soon as the fingers are released and therefore the degree of pressure of the pins upon the arms becomes immaterial.

It will now be seen that I have produced a simple and efficient escapement device in which the resistance to be overcome by the

trip is constant regardless of the tension or power of the motor which is being controlled. This is an important advantage because with the ordinary escapement device in which the resistance offered to the trip depends directly upon the tension or power of the motor, the resistance varies as the tension or power of the motor varies. Thus in the usual escapement device acting to control a spring motor the resistance offered to the trip elements is greatest when the spring motor is completely wound and gradually diminishes as the motor becomes unwound. Consequently my invention has distinct advantages even though the auxiliary spring be made so powerful that the resistance offered to the tripping elements is just as great as the maximum resistance which would be offered by the main motor to the tripping elements of an ordinary escapement; but the advantage in many cases may be carried still further because the auxiliary spring may usually be made light enough greatly to reduce the resistance encountered by the tripping elements. It will therefore be seen that I have produced an escapement mechanism which is sensitive, delicate in its operation and constant as to the power required for tripping or releasing it.

As I have heretofore explained, the movable anchor may be actuated in any suitable way. In the drawings I have illustrated a novel form of fluid pressure motor which I have found to be very satisfactory where some sort of clockwork mechanism is to be controlled by slight puffs of air or other fluid. The motor consists of a cup-shaped casing 50 having an inlet pipe 51 opening into the bottom thereof. Lying upon the bottom of the casing is a diaphragm made of two disks of flexible rubber 52 and 53, these being preferably so disposed that the grain of one disk is transverse to the grain of the other disk. The edges of the rubber disks or sheets are clamped against the bottom of the cup by means of a ring 54 lying above the same and engaged at its upper edge by a plate 55 having projections 56 which extend into the cam grooves 57 in the casing. By turning the member 55 it is forced down upon the member 54 and causes the edges of the diaphragm to be clamped firmly in place. On the upper side of the diaphragm is a hard rubber disk 58 on top of which rests a disk-like nut 59 which is screwed upon the upper end of a stud 60 passing through the center of the diaphragm. The underside of the member 58 is concave at the center as indicated at 65, and the head 62 of the member 60 is tapered so that the material of the diaphragm is firmly clamped between the head and the member 58 at points immediately adjacent to the body of the stud and from there extends outwardly through a gradually flaring annular passage which offers no abrupt corners over which the rubber can be crushed. A stem 63 secured at its upper end to the outer end of the arm 36 of the escapement mechanism and at its lower end by means of a ball and socket joint 64 to the outer end of the stud 60, transmits the motion of the diaphragm to the arm, causing the arm to be lifted when a slight puff of air enters the casing beneath the diaphragm and then permitting the arm to drop when the pressure beneath the diaphragm is released.

While I have illustrated and described only a single preferred form of my invention, I do not desire to be limited to the particular structural details thus illustrated and described; but intend to cover all forms and arrangements which fall within the terms employed in the definitions of my invention constituting the appended claims.

I claim:

1. In an escapement mechanism for a motor, an element driven by said motor, an abutment lying in proximity to the path of said element, a member adapted to be interposed between and to engage with said element and said abutment to arrest the motor, an auxiliary motor connected to said member for actuating said member to withdraw it from its arresting position, and a trip device acting in opposition to the auxiliary motor to control the actuation of said member.

2. In an escapement mechanism for a motor, an element driven by said motor, an abutment lying in proximity to the path of said element, a member adapted to be interposed between and to engage with said element and said abutment to arrest the motor, a movable trip finger, a spring acting on said member and on said finger to release the motor, and a movable abutment adapted to engage with the finger to arrest the same.

3. In an escapement mechanism for a motor, an element driven by said motor, an abutment lying in proximity to the path of said element, a member adapted to be interposed between and to engage with said element and said abutment to arrest the motor, said member being movable in a direction substantially at right angles to the path of travel of said element at the time the latter engages with said member, a movable trip finger, a spring acting on said finger and on said member to release the motor, and a movable abutment adapted to engage with the finger to arrest the same, said abutment being movable in a path substantially at right angles to the path described by the engaging portion of the finger when the finger is in proximity to the abutment.

4. In an escapement mechanism for a motor, an element driven by said motor, an abutment lying in proximity to the path of said element, a member adapted to be interposed between and to engage with said ele-

ment and said abutment to arrest the motor, said member being movable in a direction substantially at right angles to the path of travel of said element at the time it engages with said member, a spring for actuating said member to withdraw it from the arresting position, and a trip device acting against the tension of the spring to control the actuation of said member.

5. In an escapement mechanism for a motor, an element driven by said motor, an abutment lying in proximity to the path of said element, a member adapted to be interposed between and to engage with said element and said abutment to arrest the motor, said member being movable in a direction substantially at right angles to the path of travel of said element at the time it engages with said member, a spring for actuating said member to withdraw it from the arresting position, a trip device acting against the tension of the spring to control the actuation of said member, and a connection between the motor and the spring for causing the spring to be placed under tension during the operation of the motor.

6. In an escapement mechanism for a motor, a stationary abutment and a movable abutment, a revoluble member mounted adjacent to said abutment, an arm pivoted to said member at one side of the axis thereof so as to have angular movements about its pivotal axis and also about the axis of said member in the plane of the stationary abutment, the parts being so proportioned that said arm engages with the stationary abutment when occupying a predetermined angular position relative to said axes, an element driven by the motor and adapted to engage with said arm when the latter is in engagement with the stationary abutment, a finger fixed to said member and adapted to engage with the movable abutment, an auxiliary motor acting on said arm and tending to move the same about its pivot and to rotate said member, and means for actuating said movable abutment.

7. In an escapement mechanism for a motor, a stationary abutment and a movable abutment, a revoluble member mounted adjacent to said abutment, an arm pivoted to said member at one side of the axis thereof so as to have angular movements about its pivotal axis and also about the axis of said member in the plane of the stationary abutment, the parts being so proportioned that said arm engages with the stationary abutment when occupying a predetermined angular position relative to said axes, an element driven by the motor and adapted to engage with said arm when the latter is in engagement with the stationary abutment, a finger fixed to said member and adapted to engage with the movable abutment, a spring acting on said arm and tending to move the same about its pivot and at the same time rotate said member, a connection between said motor and said spring for causing the spring to be placed under a tension by said motor, and means for actuating said movable abutment.

8. In an escapement device for a motor, a revoluble member, two arms pivoted on said member on opposite sides of the axis of said member, links pivotally connected to said arms so as to form therewith a flexible parallelogram, a spring connected to said parallelogram at a point removed from the pivotal axes of said arms, each of said arms having a free end projecting in the opposite direction from the corresponding part of the other arm, two oppositely projecting fingers on said revoluble member, a stationary anchor and a movable anchor, each of said anchors having two separated abutments, the abutments on the stationary anchor being in the plane of the path of travel of said arms, the abutments on the movable anchor being in the plane of the path of travel of said fingers, the parts being so arranged that one or the other of the abutments on the movable anchor is always in a position to engage with one of said fingers while the abutments on the stationary anchor are in position to engage with the free ends of said arms when said parallelogram assumes a predetermined form, and means for actuating said movable anchor.

9. In an escapement device for a motor, a revoluble member, two arms pivoted on said member on opposite sides of the axis of said member, links pivotally connected to said arms so as to form therewith a flexible parallelogram, a spring connected to said parallelogram at a point removed from the pivotal axes of said arms, each of said arms having a free end projecting in the opposite direction from the corresponding part of the other arm, two oppositely projecting fingers on said revoluble member, a stationary anchor and a movable anchor, each of said anchors having two separated abutments, the abutments on the stationary anchor being in the plane of the path of travel of said arms, the abutments on the movable anchor being in the plane of the path of travel of said fingers, the parts being so arranged that one or the other of the abutments on the movable anchor is always in a position to engage with one of said fingers while the abutments on the stationary anchor are in position to engage with the free ends of said arms when said parallelogram assumes a predetermined form, means for actuating said movable anchor, and a connection between said spring and said motor for causing the spring to be placed under tension during the operation of the motor.

10. In an escapement mechanism for a motor, a rotary element driven by said mo-

tor, an abutment lying in proximity to the path of said element, a member adapted to be interposed between and to engage with said element and said abutment to arrest the motor, said member being movable in a path at right angles to the path of movement of the point on said rotary element which engages with said member, an auxiliary motor connected to said member to actuate the same, and a trip device acting in opposition to the auxiliary motor to control the actuation of said member.

In testimony whereof, I, sign this specification in the presence of two witnesses.

CHARLES BALLARD HALE.

Witnesses:

WM. F. FRENDENREICH,

RUBY V. BRYDGES.

Copies of this patent may be obtained for five cents each, by addressing the "Commissioner of Patents, Washington, D. C."