(12) INTERNATIONAL APPLICATION PUBLISHED UNDER THE PATENT COOPERATION TREATY (PCT)

(19) World Intellectual Property Organization
International Bureau

(43) International Publication Date
29 March 2018 (29.03.2018)

WIPO | PCT

(10) International Publication Number
WO 2018/055487 A1

(51) International Patent Classification:
A61H 21/00 (2006.01) *A61B 10/00* (2006.01)
A61H 23/02 (2006.01)

(21) International Application Number:
PCT/IB2017/055565

(22) International Filing Date:
14 September 2017 (14.09.2017)

(25) Filing Language: English

(26) Publication Language: English

(30) Priority Data:
1616044.2 21 September 2016 (21.09.2016) GB
2017210463282 21 August 2017 (21.08.2017) CN

(71) Applicant: **VIBRANT LTD.** [IL/IL]; HaCochav Yokneam Building, 6th Floor, POB 516, 2069206 Yokne'am (IL).

(72) Inventors: **BEN-TSUR, Lior**; 9 Nurit Street, 4267000 Netanya (IL). **MOLNAR, Shai**; 2 H'ela Street, 20162 Shorashim (IL). **SHABAT, Roni**; 19350 Kibbutz Yizra'el (IL). **LAMPERT, Shalom**; 59 Yakinton Street, POB 1078, 2152041 Maalot (IL).

(74) Agent: **SHALOM LAMPERT IP & ENGINEERING LTD.**; 59 Yakinton Street, POB 1078, 2152041 Maalot (IL).

(81) Designated States *(unless otherwise indicated, for every kind of national protection available)*: AE, AG, AL, AM, AO, AT, AU, AZ, BA, BB, BG, BH, BN, BR, BW, BY, BZ, CA, CH, CL, CN, CO, CR, CU, CZ, DE, DJ, DK, DM, DO, DZ, EC, EE, EG, ES, FI, GB, GD, GE, GH, GM, GT, HN, HR, HU, ID, IL, IN, IR, IS, JO, JP, KE, KG, KH, KN, KP, KR, KW, KZ, LA, LC, LK, LR, LS, LU, LY, MA, MD, ME, MG, MK, MN, MW, MX, MY, MZ, NA, NG, NI, NO, NZ, OM, PA, PE, PG, PH, PL, PT, QA, RO, RS, RU, RW, SA, SC, SD, SE, SG, SK, SL, SM, ST, SV, SY, TH, TJ, TM, TN, TR, TT, TZ, UA, UG, US, UZ, VC, VN, ZA, ZM, ZW.

(84) Designated States *(unless otherwise indicated, for every kind of regional protection available)*: ARIPO (BW, GH, GM, KE, LR, LS, MW, MZ, NA, RW, SD, SL, ST, SZ, TZ, UG, ZM, ZW), Eurasian (AM, AZ, BY, KG, KZ, RU, TJ, TM), European (AL, AT, BE, BG, CH, CY, CZ, DE, DK, EE, ES, FI, FR, GB, GR, HR, HU, IE, IS, IT, LT, LU, LV, MC, MK, MT, NL, NO, PL, PT, RO, RS, SE, SI, SK, SM, TR), OAPI (BF, BJ, CF, CG, CI, CM, GA, GN, GQ, GW, KM, ML, MR, NE, SN, TD, TG).

(54) Title: METHODS AND SYSTEMS FOR ADAPTIVE TREATMENT OF DISORDERS IN THE GASTROINTESTINAL TRACT

Figure 5A

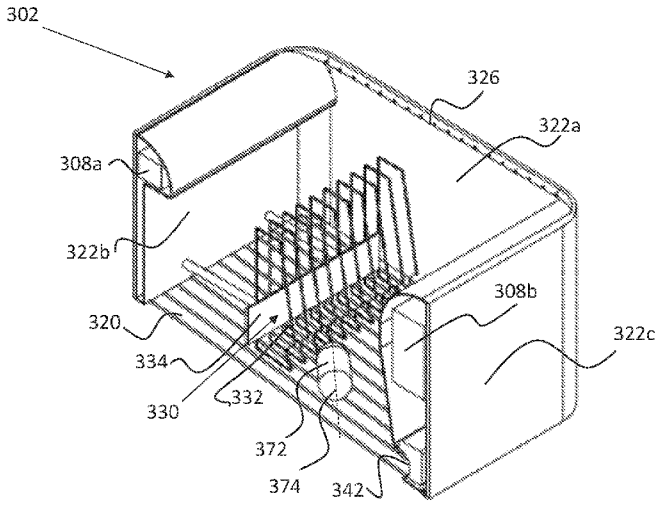

(57) Abstract: A system and a method for treatment of a disorder in a gastrointestinal tract of a subject, using a treatment protocol, the treatment protocol being based at least in part on data relating to other subjects and their responses to treatment with various treatment protocols.

[Continued on next page]

WO 2018/055487 A1

Published:
— *with international search report (Art. 21(3))*

METHODS AND SYSTEMS FOR ADAPTIVE TREATMENT OF DISORDERS IN THE GASTROINTESTINAL TRACT

FIELD OF THE INVENTION

The present invention relates in general to medical devices and treatment systems, particularly to methods and systems for adapting a treatment protocol of ingestible capsules introducible to the gastrointestinal (GI) tract of a subject to the subject's response to one or more previous treatment protocols.

SUMMARY OF THE INVENTION

In accordance with an embodiments of the present invention, there is provided a method for treatment of a disorder in a gastrointestinal tract of a human subject, the method including:

(a) activating a first vibrating ingestible capsule to carry out a first vibration protocol defined in a first treatment protocol, the first vibration protocol including delivering vibrations to a wall of the GI tract of the subject, thereby to treat the subject;

(b) receiving feedback regarding a response of the subject to treatment in accordance with the first treatment protocol;

(c) based at least on the feedback, obtaining an updated recommendation for an updated recommended treatment protocol; and

(d) programming a second programmable vibrating ingestible capsule to implement a second vibration protocol defined in a second treatment protocol, the second treatment protocol being based on the updated recommended treatment protocol; and

(e) activating the second programmable vibrating ingestible capsule to carry out the second vibration protocol, the second vibration protocol including delivering vibrations to a wall of the GI tract of the subject, thereby to treat the subject,

wherein the updated recommendation is electronically obtained based on data included in a database, the data relating to at least one other subject.

In some embodiments, the first vibrating ingestible capsule includes a programmed capsule, programmed to implement the first vibration protocol.

In some embodiments, the first vibrating ingestible capsule includes a first programmable vibrating ingestible capsule.

In some embodiments, the method further includes, prior to (a):

(f) programming the first programmable vibrating ingestible capsule to implement the first vibration protocol.

In some embodiments, first vibration protocol includes a default vibration protocol. In some embodiments, the first treatment protocol includes a default treatment protocol.

In some embodiments, the method further includes, prior to (f):

(g) receiving from the subject initial input including subject data;

(h) obtaining an initial recommendation for an initial recommended treatment protocol based on at least one characteristic included in the subject data;

(i) generating the first treatment protocol based on the initial recommended treatment protocol,

wherein at least one of initial recommendation and the updated recommendation is electronically obtained based on data included in the database, the data relating to at least one other subject.

In some embodiments, the subject data includes at least one of demographic information, medical information, and treatment history of the subject.

In some embodiments, the data included in the database includes, for each of the at least one other subject, at least one of demographic information, medical information, and treatment history information. In some embodiments, the demographic information includes at least one of gender, age, date of birth, and geographical location. In some embodiments, the medical information includes at least one of information relating to disorders of the gastrointestinal tract, information relating to chronic diseases, and information relating to medicines taken regularly. In some embodiments, the treatment history includes at least one of information relating to treatment protocols used, and a response of the at least one other subject to treatment with the treatment protocols.

In some embodiments, obtaining the initial recommendation includes:

selecting the at least one characteristic of the subject from the received subject data;

identifying in the database a treatment protocol used for treatment of other subjects sharing the at least one characteristic with the subject; and

recommending the treatment protocol as the initial recommended treatment protocol.

In some embodiments, selecting the at least one characteristic includes selecting at least two characteristics of the subject, and wherein the identifying includes identifying in the database a treatment protocol used for treatment of other subjects sharing each of the at least two characteristics with the subject.

In some embodiments, identifying includes identifying in the database a treatment protocol successfully used for treatment of the other subjects.

In some embodiments, the method further includes, following (h) and prior to (i):

providing the initial recommended treatment protocol to a decision maker; and

obtaining from the decision maker an indication whether or not the first treatment protocol should be identical to the initial recommended treatment protocol.

In some embodiments, the method further includes, if the indication obtained from the decision maker indicates that the first treatment protocol should not be identical to the initial recommended treatment protocol:

obtaining from the decision maker at least one change to be made to the initial recommended treatment protocol; and

applying the at least one change to the initial recommended treatment protocol thereby to obtain the first treatment protocol.

In some embodiments, the decision maker is a medical practitioner.

In some embodiments, the decision maker includes an electronic decision maker. In some embodiments, the at least one change obtained from the electronic decision maker is within predetermined limits for electronically changing the initial recommended treatment protocol. In some embodiments, the predetermined limits are defined in the subject data.

In some embodiments, programming the first programmable vibrating ingestible capsule includes:

providing the first vibration protocol to a capsule control unit, functionally associated with the first programmable vibrating ingestible capsule; and

the capsule control unit programming the first programmable vibrating ingestible capsule to implement the first vibration protocol.

In some embodiments, programming includes remotely transmitting the first vibration protocol to the first programmable vibrating ingestible capsule. In some embodiments, remotely transmitting includes transmitting the first vibration protocol

using a short range wireless communication method. In some embodiments, remotely transmitting the first vibration protocol includes transmitting to the first programmable vibrating ingestible capsule a list of vibration parameters for effecting the first vibration protocol. In some embodiments, remotely transmitting the first vibration protocol includes transmitting to the first programmable vibrating ingestible capsule executable code for effecting the first vibration protocol.

In some embodiments, activating the first vibrating ingestible capsule includes activating a timer of the first vibrating ingestible capsule to immediately begin effecting the first vibration protocol. In some embodiments, activating the first vibrating ingestible capsule includes activating the first vibrating ingestible capsule to identify ingestion of the first vibrating ingestible capsule by the subject, and to begin effecting the first vibration protocol immediately following identification of ingestion of the first vibrating ingestible capsule.

In some embodiments, receiving feedback includes receiving from the subject feedback indicating times at which the subject experienced bowel movements during or following the treatment in accordance with the first treatment protocol. In some embodiments, receiving feedback includes receiving from the subject feedback indicating a physical feeling experienced by the subject during or following the treatment in accordance with the first treatment protocol. In some embodiments, receiving feedback includes receiving from the subject feedback indicating at least one characteristic of fecal matter excreted by the subject during or following the treatment in accordance with the first treatment protocol.

In some embodiments, receiving feedback includes receiving, from at least one sensor, information regarding expelling of the first vibrating ingestible capsule from the body of the subject. In some embodiments, the information regarding expelling includes a time at which the first vibrating ingestible capsule was expelled from the body of the subject. In some embodiments, the information regarding expelling includes an identification of the first vibrating ingestible capsule. In some embodiments, the identification includes at least one of an identification number, an RFID, a barcode, and specific dimensions of the first vibrating ingestible capsule.

In some embodiments, receiving feedback further includes receiving from the at least one sensor information regarding at least one characteristic of fecal matter excreted from the body of the subject.

In some embodiments, the at least one sensor includes a toilet-bowl mounted sensor, and wherein the receiving the information from the sensor includes:

at the toilet-bowl mounted sensor, identifying at least one of the first vibrating ingestible capsule and fecal matter being expelled from the body of the subject;

at the toilet bowl sensor, gathering the information regarding expelling of the first vibrating ingestible capsule or of expelled fecal matter; and

transmitting the information from the toilet-bowl mounted sensor.

In some embodiments, receiving feedback includes receiving feedback from at least one of a medical practitioner or a care-giver of the subject regarding the response of the subject to treatment in accordance with the first treatment protocol.

In some embodiments, receiving feedback includes:

receiving from the subject feedback indicating at least one of times at which the subject experienced bowel movements and characteristics of fecal matter expelled during or following the treatment in accordance with the first treatment protocol; and

receiving, from at least one sensor, information indicating at least one of a time at which the first vibrating ingestible capsule was expelled from the body of the subject and characteristics of fecal matter expelled from the body of the subject; and

obtaining the updated recommendation includes:

comparing the feedback received from the subject to the information received from the at least one sensor;

assigning a reliability weight to the feedback received from the subject based on the comparison; and

taking the reliability weight of the feedback received by the user into consideration when using the feedback to obtain the updated recommendation.

In some embodiments, obtaining the updated recommendation includes:

selecting the at least one characteristic of the subject from at least one of the received subject data and the received feedback;

identifying in the database a treatment protocol used for treatment of other subjects sharing the at least one characteristic with the subject; and

recommending the treatment protocol as the updated recommended treatment protocol.

In some embodiments, selecting the at least one characteristic includes selecting from the received feedback at least one other characteristic relating to the response of the subject to the treatment with the first vibrating ingestible capsule, and wherein the identifying includes identifying in the database a treatment protocol used for treatment of other subjects who had a similar response to the treatment in accordance with the first treatment protocol.

In some embodiments, identifying includes identifying in the database a treatment protocol successfully used for treatment of the other subjects.

In some embodiments, the method further includes, following (c) and prior to (d):

providing the updated recommended treatment protocol to a decision maker; and

obtaining from the decision maker an indication whether or not the second treatment protocol should be identical to the updated recommended treatment protocol.

In some embodiments, the method further includes, if the indication obtained from the decision maker indicates that the second treatment protocol should not be identical to the updated recommended treatment protocol:

obtaining from the decision maker at least one change to be made to the updated recommended treatment protocol; and

applying the at least one change to the updated recommended treatment protocol thereby to obtain the second treatment protocol.

In some embodiments, the decision maker is a medical practitioner. In some embodiments, the decision maker includes an electronic decision maker.

In some embodiments, programming the second programmable vibrating ingestible capsule includes:

providing the second vibration protocol to a capsule control unit, functionally associated with the second programmable vibrating ingestible capsule; and

the capsule control unit programming the second programmable vibrating ingestible capsule to implement the second vibration protocol.

In some embodiments, programming the second programmable vibrating ingestible capsule includes remotely transmitting the second vibration protocol to the second programmable vibrating ingestible capsule. In some embodiments, remotely transmitting includes transmitting the second vibration protocol using a short range

wireless communication method. In some embodiments, remotely transmitting the second vibration protocol includes transmitting to the second programmable vibrating ingestible capsule a list of vibration parameters for effecting the second vibration protocol. In some embodiments, remotely transmitting the second vibration protocol includes transmitting to the second programmable vibrating ingestible capsule executable code for effecting the second vibration protocol.

In some embodiments, activating the second programmable vibrating ingestible capsule includes activating a timer of the second programmable vibrating ingestible capsule to immediately begin effecting the second vibration protocol. In some embodiments, activating the second programmable vibrating ingestible capsule includes activating the second programmable vibrating ingestible capsule to identify ingestion of the second programmable vibrating ingestible capsule by the subject, and to begin effecting the second vibration protocol immediately following identification of ingestion of the second programmable vibrating ingestible capsule.

In some embodiments, the method further includes, following (c), using the received feedback together with subject data received from the subject to update the database to reflect the response of the subject to the treatment in accordance with the first treatment protocol.

In some embodiments, the method further includes, following (e), repeating steps (b)-(e).

In accordance with an embodiments of the present invention, there is provided a system for treatment of a disorder in a gastrointestinal tract of a human subject, the system including:

at least one input module adapted to receive input from a human, typically at least one of the subject, a medical practitioner treating the subject, and a care giver of the subject;

a computer readable memory adapted to store, or storing, a subject profile for the subject, the subject profile including subject data received as initial input by the at least one input module;

a database including data relating to subjects treated for disorders in the gastrointestinal tract and to treatment protocols used for the subjects;

a first vibrating ingestible capsule adapted to be activated to implement a first vibration protocol defined in a first treatment protocol, and adapted, in an operative

mode, to deliver vibrations to a wall of the GI tract of the subject in accordance with the first vibration protocol, thereby to treat the subject;

a second programmable vibrating ingestible capsule adapted to be programmed and activated to implement a second vibration protocol defined in a second treatment protocol, and adapted, in an operative mode, to deliver vibrations to a wall of the GI tract of the subject in accordance with said second vibration protocol, thereby to treat the subject;

a processor, functionally associated with the at least one input module, the computer readable memory, and the database;

wherein the at least one input module is adapted to receive feedback regarding a response of the subject to treatment in accordance with the first vibrating ingestible capsule,

wherein the processor is configured, based at least on the feedback, to:

automatically obtain an updated recommendation for an updated recommended treatment protocol based on the data included in the database, the data relating to at least one other subject of the subjects; and

effect programming of the second programmable vibrating ingestible capsule to implement the second vibration protocol, the second treatment protocol including the second vibration protocol being based on the updated recommended treatment protocol.

In some embodiments, the first vibrating ingestible capsule includes a programmed capsule, programmed to implement the first vibration protocol.

In some embodiments, the first vibrating ingestible capsule includes a first programmable vibrating ingestible capsule.

In some embodiments, the processor is further configured to effect programming of the first programmable vibrating ingestible capsule to implement the first vibration protocol.

In some embodiments, the first vibration protocol includes a default vibration protocol. In some embodiments, the first treatment protocol includes a default treatment protocol.

In some embodiments, the processor is further configured, prior to effecting programming of the first programmable vibrating ingestible capsule, to:

obtain an initial recommendation for an initial recommended treatment protocol based on at least one characteristic included in the subject data; and

generate the first treatment protocol based on the initial recommended treatment protocol,

wherein the processor electronically obtains at least one of initial recommendation and the updated recommendation based on data included in the database, the data relating to at least one other subject of the subjects.

In some embodiments, the subject data includes at least one of demographic information, medical information, and treatment history information of the subject. In some embodiments, the data included in the database includes, for each of the at least one other subject, at least one of demographic information, medical information, and treatment history information. In some embodiments, the demographic information includes at least one of gender, age, date of birth, and geographical location. In some embodiments, the medical information includes at least one of information relating to disorders of the gastrointestinal tract, information relating to chronic diseases, and information relating to medicines taken regularly. In some embodiments, the treatment history information includes at least one of information relating to treatment protocols used, and a response of the at least one other subject to treatment with the treatment protocols.

In some embodiments, the processor is configured to obtain the initial recommendation by:

selecting the at least one characteristic of the subject from the subject data;

identifying in the database a treatment protocol used for treatment of other subjects sharing the at least one characteristic with the subject; and

recommending the treatment protocol as the initial recommended treatment protocol.

In some embodiments, the processor is further configured to provide the initial recommended treatment protocol to a decision maker and to receive from the decision maker an indication whether or not the first treatment protocol should be identical to the initial recommended treatment protocol.

In some embodiments, the processor is further configured, if the indication received from the decision maker indicates that the first treatment protocol should not be identical to the initial recommended treatment protocol, to receive from the decision

maker at least one change to be made to the initial recommended treatment protocol and to apply the at least one change to the initial recommended treatment protocol thereby to generate the first treatment protocol.

In some embodiments, the decision maker is a medical practitioner.

In some embodiments, the decision maker includes an electronic decision maker. In some embodiments, at least one change received from the electronic decision maker is within predetermined limits for electronically changing the initial recommended treatment protocol. In some embodiments, the predetermined limits are defined in the subject data.

In some embodiments, the system further includes a capsule control unit functionally associated with the processor and with the at least one second programmable vibrating ingestible capsule, the capsule control unit adapted to receive from the processor the second vibration protocol and to program the second programmable vibrating ingestible capsule to implement the second vibration protocol.

In some embodiments, the capsule control unit includes a communication module for remotely transmitting the second vibration protocol to the second programmable vibrating ingestible capsule. In some embodiments, the capsule control unit is adapted to remotely transmit the second vibration protocol using a short range wireless communication method. In some embodiments, the capsule control unit is adapted to remotely transmit to the second programmable vibrating ingestible capsule a list of vibration parameters for effecting the second vibration protocol. In some embodiments, the capsule control unit is adapted to remotely transmit to the second programmable vibrating ingestible capsule executable code for effecting the second vibration protocol.

In some embodiments, the first vibrating ingestible capsule includes a first programmable vibrating ingestible capsule, and wherein the capsule control unit is adapted to receive from the processor the first vibration protocol and to program the first programmable vibrating ingestible capsule to implement the first vibration protocol.

In some embodiments, the capsule control unit includes a communication module for remotely transmitting the first vibration protocol to the first programmable vibrating ingestible capsule. In some embodiments, the capsule control unit is adapted to remotely transmit the first vibration protocol using a short range wireless

communication method. In some embodiments, the capsule control unit is adapted to remotely transmit to the first programmable vibrating ingestible capsule a list of vibration parameters for effecting the first vibration protocol. In some embodiments, the capsule control unit is adapted to remotely transmit to the first programmable vibrating ingestible capsule executable code for effecting the first vibration protocol.

In some embodiments, the feedback includes feedback received from the subject indicating times at which the subject experienced bowel movements during or following the treatment in accordance with the first treatment protocol. In some embodiments, the feedback includes feedback received from the subject indicating a physical feeling experienced by the subject during or following the treatment in accordance with the first treatment protocol. In some embodiments, the feedback includes feedback received from the subject indicating at least one characteristic of fecal matter excreted by the subject during or following the treatment in accordance with the first treatment protocol.

In some embodiments, the system further includes at least one sensor adapted to provide to the processor information regarding expelling of the first vibrating ingestible capsule from the body of the subject. In some embodiments, the information regarding expelling includes a time at which the first vibrating ingestible capsule was expelled from the body of the subject. In some embodiments, the information regarding expelling includes an identification of the first vibrating ingestible capsule. In some embodiments, the identification includes at least one of an identification number, an RFID, a barcode, and specific dimensions of the first vibrating ingestible capsule.

In some embodiments, the at least one sensor is further adapted to provide to the processor information regarding at least one characteristic of excrement excreted from the body of the subject.

In some embodiments, the sensor provides the information to the processor as the feedback.

In some embodiments, the at least one sensor includes a toilet-bowl mounted sensor. In some embodiments, the toilet-bowl mounted sensor includes:

a receptacle adapted to be mounted within a toilet bowl and to receive excrement therein, the receptacle including:

a first side wall, a second side wall, a third side wall, and a fourth side walls, the first and fourth side walls being generally opposite one another, the

second and third side walls being generally opposite one another, and the third side wall including a side wall ingress; and

a floor surface attached to the first, second, third, and fourth side walls, the floor surface including a wire frame or a mesh including openings suitable for removal of excrement from the receptacle;

a pushing mechanism, movable relative to the receptacle and adapted to push content of the receptacle, the pushing mechanism including a movable ingress;

a capsule measuring and/or identification mechanism, adapted to at least one of measure dimensions of an ingestible capsule included in the excrement and uniquely identify the ingestible capsule;

a capsule releasing mechanism for releasing the ingestible capsule from the receptacle; and

a controller for controlling operation of the pushing mechanism, the capsule releasing mechanism, and the capsule measuring and/or identification mechanism,

wherein the capsule measuring and/or identification mechanism includes a hollow formed between the side wall ingress and the movable ingress when the pushing mechanism is adjacent the third side wall, the hollow being suitable for enclosing the capsule.

In some embodiments, motion of the pushing mechanism is adapted to apply force to the excrement in the receptacle thereby to break-down the excrement to be suitably sized for removal via the openings. In some embodiments, the pushing mechanism is adapted to sense at least one characteristic of the excrement based on an amount of the force applied to the excrement in order to break down the excrement.

In some embodiments, the hollow formed between the movable ingress and the side wall ingress has a predetermined cross section, the predetermined cross section being suitably sized to match at least one of a cross section and a diameter of a specific type of capsule expected to be expelled into the receptacle.

In some embodiments, the capsule measuring and/or identification mechanism includes at least one first sensor mounted on the third side wall and adapted to sense engagement between a surface of the pushing mechanism and the third side wall.

In some embodiments, the capsule measuring and/or identification mechanism includes at least one second sensor mounted onto the side wall ingress, and adapted to

sense engagement between an exterior surface of a capsule and a surface of the side wall ingress.

In some embodiments, the capsule measuring and/or identification mechanism includes a weighing mechanism adapted to sense a weight of a capsule captured in the hollow.

In some embodiments, the capsule measuring and/or identification mechanism further includes a capsule identification system, adapted to uniquely identify a capsule captured in the hollow.

In some embodiments, the controller is adapted to receive input from the capsule measuring and/or identification mechanism relating to the ingestible capsule following capturing thereof in the hollow, and to provide information based on the input to the processor. In some embodiments, the controller is adapted to receive input from the pushing mechanism relating to at least one characteristic of the excrement, and to provide information based on the input to the processor.

In some embodiments, the feedback includes feedback received from at least one of a medical practitioner or a care-giver of the subject regarding the response of the subject to the treatment in accordance with the first treatment protocol.

In some embodiments, the processor is further configured to use the subject data and the received feedback to update the database to reflect the response of the subject to the treatment in accordance with the first treatment protocol.

In accordance with an embodiments of the present invention, there is provided a toilet-bowl mounted sensor, including:

a receptacle adapted to be mounted within a toilet bowl and to receive excrement therein, the receptacle including:

a first side wall, a second side wall, a third side wall, and a fourth side walls, the first and fourth side walls being generally opposite one another, the second and third side walls being generally opposite one another, and the third side wall including a side wall ingress; and

a floor surface attached to the first, second, third, and fourth side walls, the floor surface including a wire frame or a mesh including openings suitable for removal of excrement from the receptacle;

a pushing mechanism, movable relative to the receptacle and adapted to push content of the receptacle, the pushing mechanism including a movable ingress;

a capsule measuring and/or identification mechanism, adapted to at least one of measure dimensions of an ingestible capsule included in the excrement and uniquely identify the ingestible capsule;

a capsule releasing mechanism for releasing the ingestible capsule from the receptacle; and

a controller for controlling operation of the pushing mechanism, the capsule releasing mechanism, and the capsule measuring and/or identification mechanism,

wherein the capsule measuring and/or identification mechanism includes a hollow formed between the side wall ingress and the movable ingress when the pushing mechanism is adjacent the third side wall, the hollow being suitable for enclosing the ingestible capsule.

In some embodiments, the sensor further includes a seal circumferentially arranged about the receptacle, wherein the receptacle and the seal are sized to circumferentially engage and seal against the toilet bowl along an entire cross section thereof, such that all matter expelled into the toilet bowl is received in the receptacle.

In some embodiments, at least one of the first, second, third, and fourth side walls includes a plurality of water jets, functionally associated with a conduit, the water jets adapted to receive water from the conduit and to spray the water into the receptacle for washing out excrement therefrom.

In some embodiments, the openings in the floor surface are suitably sized so that the ingestible capsule cannot pass through the openings.

In some embodiments, the floor surface is angled from the second side wall toward the third side wall, such that gravity assists in directing the ingestible capsule toward the capsule measuring and/or identification mechanism.

In some embodiments, the pushing mechanism extends generally parallel to the second side wall, and is movable between the second and third side walls. In some embodiments, motion of the pushing mechanism is adapted to apply force to the excrement in the receptacle thereby to break-down the excrement to be suitably sized for removal via the openings.

In some embodiments, during the motion, the pushing mechanism is adapted to sense at least one characteristic of the excrement based on and amount of the force applied to the excrement in order to break down the excrement.

In some embodiments, the pushing mechanism includes a plurality of wire frame elements connected to one another by a connector surface.

In some embodiments, the hollow formed between the movable ingress and the side wall ingress has a hollow cross section, the cross section being suitably sized to match at least one of a cross section and a diameter of a specific type of ingestible capsule expected to be expelled into the receptacle.

In some embodiments, the capsule measuring and/or identification mechanism includes at least one first sensor mounted on the third side wall and adapted to sense engagement between a surface of the pushing mechanism and the third side wall. In some embodiments, the capsule measuring and/or identification mechanism further includes at least one second sensor mounted onto the side wall ingress, and adapted to sense engagement between an exterior surface of an ingestible capsule captured in the hollow and a surface of the side wall ingress.

In some embodiments, the capsule measuring and/or identification mechanism including a weighing mechanism adapted to sense a weight of an ingestible capsule captured in the hollow. In some embodiments, the weighing mechanism forms part of, or is mounted on, the capsule releasing mechanism.

In some embodiments, the capsule measuring and/or identification mechanism includes a capsule identification system, adapted to uniquely identify an ingestible capsule captured in the hollow. In some embodiments, the capsule identification system includes a barcode reader adapted to read a barcode printed on an exterior surface of the ingestible capsule captured in the hollow, thereby to uniquely identify the ingestible capsule. In some embodiments, the capsule identification system includes a QR-code reader adapted to read a QR-code printed on an exterior surface of the ingestible capsule captured in the hollow, thereby to uniquely identify the ingestible capsule. In some embodiments, the capsule identification system includes a text interpretation mechanism adapted to capture and interpret an identification number or text printed on an exterior surface of the ingestible capsule captured in the hollow, thereby to uniquely identify the ingestible capsule. In some embodiments, the capsule identification system includes an image processing mechanism adapted to capture and interpret an image printed on an exterior surface of the ingestible capsule captured in the hollow, thereby to uniquely identify the ingestible capsule. In some embodiments, the capsule identification system includes an RFID tag reader adapted to read an RFID tag mounted

onto the ingestible capsule captured in the hollow, thereby to uniquely identify the ingestible capsule.

In some embodiments, the capsule releasing mechanism includes a hinged portal formed in the floor surface beneath the side wall ingress, such that opening of the portal releases the ingestible capsule from the hollow and from the receptacle. In some embodiments, opening and closing of the portal is controlled by the controller.

In some embodiments, the controller is adapted to receive input from the capsule measuring and/or identification mechanism relating to the ingestible capsule following capturing thereof, and to provide capsule information based on the input to a remote location. In some embodiments, the controller is adapted to receive input from the pushing mechanism relating to at least one characteristic of the excrement, and to provide excrement information based on the input to a remote location.

In some embodiments, the controller is adapted to provide at least one of the capsule information and the excrement information by wired communication with the remote location, via a communication wire extending from the controller along the toilet bowl. In some embodiments, the controller is adapted to provide at least one of the capsule information and the excrement information by wireless communication with the remote location.

In some embodiments, the capsule information provided to the remote location includes at least one of a time at which the ingestible capsule was expelled into the receptacle or captured in the hollow, dimensions of the ingestible capsule, a weight of the ingestible capsule, and an identification of the ingestible capsule.

In some embodiments, the controller is adapted to provide power to the pushing mechanism, the capsule measuring and/or identification mechanism, and the capsule releasing mechanism. In some embodiments, the controller is adapted to receive power from a power supply wire extending along the toilet bowl.

In accordance with an embodiments of the present invention, there is provided a method for measuring and identifying an ingestible capsule expelled into a toilet bowl, the method including:

mounting a sensor as described herein in the toilet bowl, such that matter expelled into the toilet bowl, including the ingestible capsule, is received in the receptacle;

breaking down excrement included in the matter so that excrement is sized to be removed from the receptacle via the openings in the floor surface;

pushing the ingestible capsule toward the third side wall thereby capturing the ingestible capsule in the hollow; and

measuring whether at least one of a cross section of the ingestible capsule matches an expected cross section and a diameter of the ingestible capsule matches an expected diameter.

In some embodiments, breaking down includes moving the pushing mechanism back and forth between the second and third side walls, thereby to break down the excrement.

In some embodiments, measuring includes weighing the ingestible capsule. In some embodiments, the method further includes, following the capturing, uniquely identifying the capsule.

In some embodiments, the method further includes reporting at least one of measurements of the ingestible capsule, a weight of the ingestible capsule, and an identity of the ingestible capsule to a remote location.

In some embodiments, reporting is only carried out if the cross section of the ingestible capsule matches the expected cross section or if the diameter of the ingestible capsule matches the expected diameter. In some embodiments, reporting is only carried out if a weight of the ingestible capsule matches an expected weight.

In some embodiments, the method further includes, following the measuring, releasing the ingestible capsule from the receptacle via the capsule releasing mechanism.

BRIEF DESCRIPTION OF THE FIGURES

The foregoing discussion will be understood more readily from the following detailed description of the invention, when taken in conjunction with the accompanying Figures (1-8), in which:

Figure 1 is a schematic block diagram of a system for treatment of a disorder in the gastrointestinal tract of a subject according to an embodiment of the present invention;

Figures 2A and 2B together are a schematic flowchart of a method for treatment of a disorder in the gastrointestinal tract of a subject according to the present invention, the method utilizing the inventive system of Figure 1;

Figures 3A, 3B, and 3C are, respectively, a partially cut away side plan view, a partially cut away perspective view, and a top plan view of an inventive toilet-bowl mounted sensor for capturing and identifying an ingestible capsule according to the present invention, the toilet-bowl mounted sensor forming part of the system of Figure 1;

Figure 4 is a sectional view of another embodiment of a receptacle, forming part of an inventive toilet-bowl mounted sensor according to the present invention, in a stand-by mode;

Figures 5A and 5B are, respectively, a perspective view and a sectional view of the receptacle of Figure 4 in an operational mode;

Figure 6 is a partial sectional view of the receptacle of Figure 4 in a capsule capturing mode;

Figure 7 is a sectional view of the receptacle of Figure 4 in a capsule releasing mode; and

Figure 8 is a schematic flowchart of a method for capturing and identifying an ingestible capsule that has been expelled into a toilet bowl according to the present invention, the method utilizing the inventive toilet-bowl mounted sensor of any one of Figures 3A-7.

DESCRIPTION OF THE PREFERRED EMBODIMENTS

The principles of the inventive system and method for treatment of a disorder in the gastrointestinal tract of a subject, and the inventive toilet-bowl mounted sensor for capturing and identifying an ingestible capsule that has been expelled into a toilet-bowl and method of use thereof, may be better understood with reference to the drawings and the accompanying description.

Before explaining at least one embodiment of the invention in detail, it is to be understood that the invention is not limited in its application to the details of construction and the arrangement of the components set forth in the following description or illustrated in the drawings. The invention is capable of other

embodiments or of being practiced or carried out in various ways. Also, it is to be understood that the phraseology and terminology employed herein is for the purpose of description and should not be regarded as limiting.

For the purposes of this application, the term "subject" relates to a human subject.

For the purposes of this application, the term "vibrating ingestible capsule" relates to an ingestible capsule adapted to at least intermittently vibrate, for a cumulative duration of at least one minute, in accordance with a vibration protocol of the capsule, such that , when the capsule is disposed in the gastrointestinal (GI) tract of a subject and is in operative mode, the vibrations are delivered to a wall of the GI tract of the subject, so as to provide mechanical stimulation to the GI tract of the subject. Typically, such mechanical stimulation is provided so as to treat GI disorders such as constipation.

For the purposes of this application, the term "programmable vibrating ingestible capsule" relates to a vibrating ingestible capsule adapted to vibrate in accordance with vibration protocol, the vibration protocol adapted to be programmed into the capsule by a capsule control unit. Specifically, the vibration protocol of a programmable vibrating ingestible capsule may be changed by re-programming the capsule to implement a different vibration protocol.

For the purposes of this application, the term "programmed vibrating ingestible capsule" relates to a vibrating ingestible capsule adapted to vibrate in accordance with a vibration protocol, the vibration protocol being programmed into the capsule, for example by the manufacturer thereof. The programmed vibration protocol is fixed, and the capsule cannot be re-programmed.

For the purposes of this application, the term "capsule control unit" relates to a device adapted to produce a vibrating ingestible capsule and/or to activate a vibrating ingestible capsule. Typically, the capsule control unit is adapted to receive a vibration protocol, and to transmit the vibration protocol to a vibrating ingestible capsule, thereby to program the capsule to implement the vibration protocol. For example, the capsule control unit may provide the vibration protocol to a processor of the programmable vibrating ingestible capsule by means of remote communication, such as by short range wireless communication, and may provide the protocol as a list of parameters, as executable code, or in any other manner suitable for the capsule to implement the

vibration protocol. For activation, the capsule control unit typically is adapted to transmit an activation signal to a vibrating ingestible capsule, indicating to a processor of the capsule that the vibration protocol should be initiated. In some cases, the capsule control unit is also adapted to receive a signal from the capsule, indicating that the programmed vibration protocol and/or the activation instruction have been received.

For the purposes of this application, the term "short range wireless communication method" relates to any wireless communication method or protocol in which signals are communicated up to a maximum range of at most 1 kilometer, at most 500 meters, at most 300 meters, at most 200 meters, at most 100 meters, at most 50 meters, or at most 10 meters such as, for example, Bluetooth communication, Wi-Fi communication, RFID signal communication, low frequency magnetic field, and the like.

For the purposes of this application, the term "intermittently activated vibration engine" refers to a vibration engine which is adapted to vibrate at certain times and not to vibrate at other times, the activation times being selected by a processor or other control unit controlling the vibration engine, such as a processor of a vibrating ingestible capsule of which the vibration engine forms part.

For the purposes of this application, the term "vibration protocol" relates to a protocol specifying vibration parameters of an intermittently activated vibration engine of a vibrating ingestible capsule. Typically, the vibration protocol relates to an activation delay for initiating vibration (a duration between activation of the capsule and the first activation of the vibration engine) which is typically in the range of 0-24 hours, a vibration rate (number of vibration cycles per hour) which is typically in the range of 1-300 cycles per hour, a vibration period and a repose period for each vibration cycle, a vibration frequency which is typically in the range of 1-500Hz, an amount of force to be exerted by the vibrations, a set of vibration and non-vibration durations (i.e. a set specifying that the capsule vibrates at the vibration rate for a certain duration or a certain number of cycles, then rests for a certain duration, vibrates again for a certain duration or number of cycles, and so forth), and the like. The vibration and non-vibration durations may be defined as absolute times, or may be relative to ingestion or activation of the capsule. For example, a treatment protocol may indicate that the activation delay is 4 hours (i.e. intermittently activated vibration engine should begin vibration 4 hours after activation or ingestion of the capsule), and that following the

activation delay the capsule should vibrate at a frequency of 150Hz and at a duty cycle of 60%, for a duration of 2 hours, stop vibrating for 2 hours, and subsequently resume vibration for a duration of four hours, at a frequency of 250Hz and at a duty cycle of 85%, each cycle having a vibration period of 3 seconds and a repose period of 26 seconds. As another example, the activation delay is 8 hours, and subsequently vibration begins at 200Hz at a 40% duty cycle in repetitive cycles having a 1 second vibration period followed by a 27 second repose period. After each five cycles of vibration, the vibration frequency is increased by 2Hz, and the duty cycle is increased by 1%.

For the purposes of this application, the term "treatment procedure" relates to parameters of a treatment using vibrating ingestible capsules, which are typically defined by a treating physician or medical practitioner. For example, the treatment procedure may include the number of capsule to be taken in a specific time duration (e.g. 3 capsules per week, 2 capsules per day, etc.), the frequency at which capsules should be taken, the time of day at which capsules should be taken, whether the capsule should be taken with or without food, and the like.

For the purpose of this application, the term "treatment protocol" relates to all aspects of treatment of a subject with a vibrating ingestible capsule, and includes the treatment procedure as well as the vibration protocol to be used for treating the subject.

For the purposes of this application, the term "default treatment protocol" relates to a standard treatment protocol which is typically used when initially treating a subject with a vibrating ingestible capsule, or when insufficient information is available for tailoring a specific treatment protocol to the subject.

For the purposes of this application, the terms "default vibration protocol" relates to a standard vibration protocol which is typically used when initially treating a subject with a vibrating ingestible capsule, or when insufficient information is available for tailoring a specific treatment protocol to the subject. In some cases, the default vibration protocol is the vibration protocol used by programmed vibrating ingestible capsules.

For the purposes of this application, the term "electronically obtained", when relating to a treatment protocol, relates to a treatment protocol which was generated by or determined by a machine based on electronic information, such as information included in a computerized or electronic profile of a subject and/or data included in a

database, without direct human input or intervention.

For the purposes of this application, the term "successful treatment", and variations thereof, relates to treatment of a subject with one or more capsules implementing a specific treatment protocol such that during or following the treatment, the symptoms of the subject are improved by a significant degree, as defined by medical practices. For treatment of chronic constipation, successful treatment is treatment that results in an increase of at least one bowel movement per two-weeks, an increase of at least one bowel movement per week, an increase of three bowel movements per two-weeks, or an increase of at least two bowel movements per week, on average.

For the purposes of this application, the term "decision maker" relates to any entity capable of applying logic to a proposed treatment protocol, in order to determine whether or not the treatment protocol is suitable for treatment of a subject, and/or whether the treatment protocol must be modified in order to be suitable for treatment of the subject. The decision maker may be a human, or a machine including suitable artificial intelligence or logic components.

For the purposes of this application, the term "electronic decision maker" relates to a decision maker which is fully based on artificial intelligence or logic, and which makes decisions regarding the suitability of a proposed treatment protocol for treatment of a subject without direct input from a human, only based on artificial logic and/or intelligence. The electronic decision maker is typically limited to decisions within a scope determined by a human, such as a medical practitioner, prior to use of the electronic decision maker. For example, a doctor may define a range of vibration protocols which is acceptable for use for a subject, and the electronic decision maker may make decisions within that range, but would refer to a human decision maker if decisions are required that are outside of the predefined range.

Referring now to the drawings, Figure 1 is a schematic block diagram of a system **100** for treatment of a disorder in the gastrointestinal tract of a subject according to an embodiment of the present invention.

As seen in Figure 1, system **100** includes at least one input module **102** operative to receive input from at least one of the subject, a medical practitioner or medical personnel treating the subject, and a care giver of the subject, such as a parent, guardian, or personal medical aide, for example via a user interface **104**. The input

module **102** may further be operative to receive input from one or more sensors, as described in further detail hereinbelow. In some embodiments, separate input modules **102** and/or different user interfaces **104** are used for different input providers.

The input module **102** may be any suitable input module, and may include, for example, a receiver or transceiver configured to receive the input as a communication signal from a remote location, such as from the one or more sensors, or a keyboard or touchpad configured to receive input entered directly thereinto, for example by the subject, a caretaker of the subject, medical personnel treating the subject, or any other input provider.

A computer readable memory stores a subject profile **106** for the subject, including subject data. The subject profile **106** may be functionally associated with the input module **102**, and the subject data may be provided to the subject profile **106** as input, via one of more input module **102**. For example, the subject, the medical practitioner or medical personnel treating the subject, or the care giver of the subject may provide the subject data, for example as an initial input.

In some embodiments, the subject data includes demographic information of the subject, such as the subject's name, identification number such as a social security number or passport number, address, date of birth, age, gender, contact information, and emergency contact information. In some embodiments, the subject data includes medical information of the subject, such as the subject's medical history and particularly the medical history of constipation and or gastrointestinal diseases, medications and/or treatments previously tried by the subject, particularly for constipation and gastrointestinal diseases, results of medical examination such as etiology of constipation, results from physical examination including digital rectal examinations, results from gastrointestinal explorations such as transit or motility studies, anorectal manometry, balloon test expulsion, or other gastrointestinal explorations, information relating to allergies, chronic diseases, medications currently being used, and the like. In some embodiments, the subject data may also include information relating to the subject's lifestyle, such as diet, water intake, and physical activity. In some embodiments, for female subjects, the subject data may also include obstetric medical history.

In some embodiments, the subject data may include guidelines for treatment of the subject, or a "treatment safe zone" or "self adapting zone" for the subject, such as,

for example, a range of vibration protocols suitable for treatment of safely treating the subject, which may be used by an electronic decision maker as described in further detail hereinbelow.

In some embodiments, the system includes a database **108**, which may be functionally associated with one or more input module **102** and/or with subject profile **106**, includes data relating to subjects treated for disorders in the gastrointestinal tract. In some embodiments, data is input into the database **108** directly by an input provider, such as one or more subjects, a medical practitioner, medical personnel, a researcher or research facility, and the like, for example via input module **102** and user interface **104**. In some embodiments, the data is input into the database **108** automatically, for example directly from the subject profile **106**, as described in further detail hereinbelow.

In some embodiments, data included in database **108** relates to at least one other subject, and preferably to a plurality of subjects other than the subject. In some embodiments, the data included in database **108** includes, for each other subject, demographic information such as gender, age, date of birth, and the like, as well as information relating to disorders of the gastrointestinal tract experienced by the other subject, to treatments provided for such disorders, and to the other subject's response to such treatments. In some embodiments, the data included in database **108** may be substantially parallel to the subject data. Specifically, in some embodiments, the data included in the database lists, for each of the other subjects, one or more vibration protocols, treatment procedures, and/or treatment protocols used to treat the other subject, and the user's response to treatment with such protocols and procedures.

A processor **110** is functionally associated with subject profile **106** and with database **108**, and may further be functionally associated with input module **102**. Processor **110** is functionally associated with a computer readable storage medium **112** storing instructions, which may be carried out by the processor **110**, as explained in further detail hereinbelow with respect to Figure 2.

In some embodiments, processor **110** is configured to receive, for example via input module **102** or via subject profile **106**, feedback relating to a response of the subject to treatment with a specific treatment protocol, a specific vibration protocol, or specific treatment procedures. For example, the feedback may indicate times at which the subject experienced bowel movements following the treatment, a physical feeling

experienced by the subject during or immediately after the treatment, or one or more characteristics of fecal matter excreted by the subject during or following the treatment.

In some embodiments, the feedback is received from a human, such as from the subject, a medical practitioner or medical treating the subject, or a care-giver of the subject. In some embodiments, the feedback is received from a sensor, as described in further detail hereinbelow.

In some embodiments, the processor **110** is further configured to assign a weight, or a reliability score, to such feedback, as described in further detail hereinbelow.

In some embodiments, processor **110** is configured to electronically obtain an initial recommendation for an initial recommended treatment protocol for the subject. In some embodiments, the initial recommendation may be a default initial recommendation. In some embodiments, the initial recommendation may be based on at least one selected characteristic included in the subject data. In some embodiments, the initial recommendation may be based on data included in the database **108**, for example data relating to other subjects sharing the selected characteristic(s) with the subject.

In some embodiments, processor **110** is configured to electronically obtain an updated recommendation for an updated recommended treatment protocol for the subject, based on received feedback relating to a response of the subject to a previously used treatment protocol, on at least one characteristic included in the subject data and/or on data included in the database **108**, for example data relating to other subjects sharing the characteristic with the subject or sharing the experienced response with the subject.

The updated recommendation may change one or more parameters of the vibration protocol or of the treatment protocol, relative to a previous recommendation. For example, the updated recommendation may change the vibration frequency, the delay time until starting the vibration protocol, the duty cycle, the segment in the GI tract in which the capsule is intended to vibrate, the length of the vibration time in each vibration cycle, the rest time of each vibration cycle, and/or the vibration intensity.

The system **100** further includes a first vibrating ingestible capsule **114a**, adapted to implement a first vibration protocol for delivering vibrations, or mechanical stimulation, to a wall of the GI tract of the subject thereby to treat the gastrointestinal disorder of the subject, the first vibration protocol forming part of a first treatment protocol for the subject. The system further includes at least one second programmable

vibrating ingestible capsule **114b**, adapted to be programmed to implement a second vibration protocol delivering vibrations, or mechanical stimulation, to a wall of the GI tract of the subject thereby to treat the gastrointestinal disorder of the subject, the second vibration protocol forming part of a second treatment protocol for the subject. As explained in further detail hereinbelow, in some embodiments, the first and/or second vibration protocols and/or treatment protocols may be identical to, or may be based on, recommended vibration protocols and/or treatment protocols electronically obtained by processor **110**.

Each of capsules **114a** and **114b** may include a sensor module including one or more sensors; a timer; an intermittently activated vibration engine; a processor, functionally associated with the sensor(s) in the sensor module, with the timer, and with the vibration engine; a receiver or transceiver functionally associated with the processor; and at least one power source providing power to the sensor module, the timer, the vibration engine, the processor, and/or the receiver/transceiver.

In some embodiments, the sensors included in the sensor module may sense conditions in the vicinity of the capsule. As such, the sensors may include: a pH sensor adapted to sense the pH in the vicinity of the capsule; a light sensor adapted to sense a degree of illumination in the vicinity of the capsule; a pressure sensor adapted to sense pressure applied to the capsule; and/or an orientation sensor, such as an accelerometer, adapted to sense the three dimensional orientation of the capsule.

The power source of capsules **114a** and **114b** may be any suitable power source, such as, for example, one or more alkaline or silver oxide batteries, lithium batteries, primary batteries, rechargeable batteries, capacitors and/or super capacitors.

In some embodiments, the capsules **114a** and **114b** may be substantially as described in U.S. Patent Application Publication No. 2015/0073315 and in U.S. Patent No. 9,078,799 which are incorporated by reference as if fully set forth herein.

In some embodiments, first vibrating ingestible capsule **114a** may be a programmed vibrating ingestible capsule, programmed, for example at a time of manufacturing thereof, to implement a specific vibration protocol as the first vibration protocol. In other embodiments, the first vibrating ingestible capsule **114a** is a first programmable vibrating ingestible capsule **114a**, adapted to be programmed to implement the first vibration protocol.

In some embodiments, the first treatment protocol may be a default treatment

protocol, used as the standard initial treatment protocol for subjects suffering from any disorder, or from a specific disorder, of the gastrointestinal tract, and may define a default vibration protocol as the first vibration protocol.

A capsule control unit **116**, functionally associated with processor **110** and with at least one programmable vibrating ingestible capsule, is adapted to receive a vibration protocol and to program a programmable vibrating ingestible capsule to implement the received vibration protocol. In some embodiments, the capsule control unit is adapted to receive a treatment protocol including treatment procedures and a vibration protocol and to program the programmable vibrating ingestible capsule to implement the received vibration protocol.

In some embodiments, capsule control unit **116** may include a dedicated processor; a programming module; a verification and activation module; and/or a transceiver or other communication module. The capsule control unit may further include at least one power source providing power to components of the capsule control unit.

In some embodiments, the capsule control unit **116** further includes a user interface, adapted to provide output to the subject or to another user associated with the subject, such as a medical practitioner or care giver. In some such embodiments, the capsule control unit **116** may prompt the subject, via the user interface, to ingest one or more capsules in accordance with the treatment protocol received by the capsule control unit.

Capsule control unit **116** may be any suitable control unit, including a suitably programmed computing device such as a smartphone, a tablet computer, laptop computer, desktop computer, and the like, or may be a dedicated control unit, e.g. forming part of another medical device.

In system **100**, capsule control unit **116**, or a dedicated processor thereof, is adapted to receive from processor **110** the second treatment protocol, for example via a transceiver of the capsule control unit **116**, and to program the second programmable vibrating ingestible capsule **114b** to implement the second vibration protocol defined in the second treatment protocol. In some embodiments, in which first vibrating ingestible capsule **114a** is programmable, capsule control unit **116** is further adapted to similarly receive the first treatment protocol, from processor **110** or from another source, and to program the first vibrating ingestible capsule **114a** to implement the first vibration

protocol defined in the first treatment protocol.

In some embodiments, the programming module of capsule control unit **116** is configured to receive the second vibration protocol from the processor of the capsule control unit, and to program a processor of second programmable vibrating ingestible capsule **114b** to implement the second vibration protocol upon activation thereof or upon ingestion of the second vibrating ingestible capsule. Similarly, in embodiments in which first vibrating ingestible capsule **114a** is programmable, the programming module of capsule control unit **116** is configured to receive the first vibration protocol from the processor of the capsule control unit, and to program a processor of first vibrating ingestible capsule **114a** to implement the first vibration protocol upon activation thereof or upon ingestion of the first vibrating ingestible capsule.

In some embodiments, the programming module of capsule control unit **116** may include a transmitter, or may be functionally associated with a transmitter, for transmission of the first and/or second vibration protocol to a receiver/transceiver of capsules **114a** and/or **114b**, for example using a short range wireless communication method.

In some embodiments, the programming module of capsule control unit **116** transmits the vibration protocol to the capsule **114a** or **114b** as a sequence of parameter signals, such as digits, indicating time frames from activation or from ingestion and vibration parameters to be used at those time frames. In some embodiments, the programming module of capsule control unit **116** transmits the vibration protocol to the capsule **114a** or **114b** as executable code to be used by the processor of the capsule to automatically activate the vibration engine thereof in accordance with the vibration protocol.

In some embodiments, a memory element within the capsule **114a** or **114b** includes multiple vibration protocols which may be effected by the capsule, and the programming module of capsule control unit **116** transmits to the capsule and indication of a specific one of the multiple vibration protocols to be used, such as a vibration protocol identifier.

In some embodiments, the activation module of the capsule control unit **116** is configured to activate the first and/or second programmable vibrating ingestible capsule for operation.

In some cases, the activation includes activating the capsule to identify ingestion thereof by the subject, and subsequently to being implementation of the vibration protocol programmed therein. In other embodiments, activation of the capsule includes immediate activation of the timer to start counting time till activation of the vibration engine. Such embodiments assume that the capsule is activated shortly before the subject ingests the capsule.

In some embodiments, the activation module of capsule control module **116** includes a transmitter, or is functionally associated with a transmitter or transceiver, and activates the capsule by providing an activation signal thereto.

In some embodiments, the activation module also includes a verification module, configured to verify that the capsule received the vibration protocol transmitted thereto and is capable of effecting the vibration protocol without error. In some embodiments, the verification module includes, or is functionally associated with a receiver, receiving from the capsule a verification signal indicating that the capsule has received the vibration protocol. In some embodiments, the verification module includes a vibration sensor, sensing the capsule vibrating in accordance with a specific vibration pattern indicative of verification thereof.

In some embodiments, the processor **110** and the capsule control unit **116** are functionally associated with a decision maker **118**, which is adapted to receive, for example from processor **110**, a suggestion or recommendation for a treatment protocol or a vibration protocol, and to approve, reject, or modify the suggested or recommended protocol for treatment of the subject.

In some embodiments, the decision maker may be a human decision maker, such as a medical practitioner or treating gastroenterologist, who may receive the suggested or recommended treatment protocol or vibration protocol by the protocol being presented on a display visible to the human decision maker, or by receiving an electronic message, such as an email message, specifying the recommended or suggested treatment protocol or vibration protocol.

The human decision maker may approve, reject, or modify the received treatment protocol or vibration protocol by interacting with a user interface **104** of one of input modules **102**, or by interacting directly with capsule control unit **116**, for example with an input module or user interface thereof.

In other embodiments, the decision maker **118** is an electronic decision maker, such as a suitably equipped computer or server, which is adapted to electronically receive the suggested or recommended treatment protocol or vibration protocol, and to approve, reject, or modify the suggested or recommended treatment protocol or vibration protocol. In some embodiments, the logic applied by the electronic decision maker may be learned over time, for example based on the results that similar treatment had for other subjects. In some embodiments, the electronic decision maker may include an artificial intelligence component.

In some embodiments, decisions made by an electronic decision maker are limited to be within certain limitations, or within a "self adapting zone" predefined by a human decision maker, such as safety regulations defined by a manufacturer of the capsule and/or medical limitations defined by a medical practitioner. For example, the manufacturer may indicate that the frequency of vibrations has an upper limit of 1000Hz, in which case the decision maker will not permit, or approve, any protocol requiring vibration at a frequency greater than 1000Hz. As another example, a medical practitioner may indicate that no changes can be made to treatment procedures, in which case the electronic decision maker would make decisions relating to the vibration protocol, but would defer any decisions relating to the treatment procedures to a human decision maker, for example via an electronic message.

In some embodiments, the limitations are based on the structure and/or functionality of the capsule, such as safety limitations defined by the manufacturer. In such embodiments, the same limitations apply to multiple subjects, and multiple capsules. In some embodiments, the limitations are defined by the medical practitioner based on the medical state of the subject, and are specific to the subject being treated. Such limitations may be provided as input by the medical practitioner, for example as part of the subject data stored in the subject profile.

In some embodiments, the electronic decision maker may be functionally associated with the capsule control unit **116**, and may transmit the approved or modified treatment protocol or vibration protocol directly to the capsule control unit **116**. In other embodiments, the electronic decision maker provides the approved or modified treatment protocol or vibration protocol to processor **110**, which may transmit the treatment protocol to capsule control unit **116** as described hereinabove.

In some embodiments, processor **110** and/or subject profile **106** is further associated with at least one sensor **120**, which is adapted to sense, and provide to processor **110** or to subject profile **106**, information regarding a vibrating ingestible capsule being expelled from the body of the subject. In some embodiments, the sensor comprises a toilet-bowl mounted sensor. The toilet bowl mounted sensor may be any suitable sensor, such as any one of the inventive sensors described hereinbelow with reference to Figures 3A to 8, or a toilet-bowl mounted sensor known in the art, for example as described in US Patent Application Publication No. 2009/0326514, which is hereby incorporated by reference.

The information provided by sensor **120** may include a time at which the vibrating ingestible capsule was expelled from the body of the subject, and/or an identification of the expelled capsule.

Reference is now additionally made to Figures 2A and 2B, which, together, are a schematic flowchart of a method for treatment of a disorder in the gastrointestinal tract of a subject according to the present invention, the method utilizing the inventive system of Figure 1.

As seen, and as described in further detail hereinbelow, the method may start at step **200**, at step **218**, or at step **222**.

In some embodiments, the method begins at step **200**, by obtaining initial input including subject data for a subject to be treated using the method. The subject data typically includes demographic information and/or medical history information for the subject, required for initiating subject profile **106**. In some embodiments, the input may additionally include information relating to other subjects, such as information required for creating or updating database **108**. In some embodiments, the input may further include limitations defining a "self adapting zone" for an electronic decision maker, as described hereinabove.

As mentioned hereinabove with reference to Figure 1, the input may be received from the subject, from a medical facility or medical practitioner treating the subject, or from a caretaker of the subject. In some embodiments, the input is provided to input module **102** via a user interface **104** which is local to system **100**, while in other embodiments the input may be provided via a remote user interface **104**, and communicated to input module **102** or to processor **110** using a suitable communication method.

At step **202**, a subject profile, such as subject profile **106** described hereinabove with respect to Figure 1, is generated for the subject, for example by processor **110**, based on the input relating to the subject.

Turning to step **204**, it is seen that a recommendation for a recommended treatment protocol for the subject is obtained. In some embodiments, the recommendation is electronically obtained by processor **110**. In some embodiments, the recommendation is based on information included in the subject profile **106**.

For example, in an initial treatment round, the subject profile may indicate that the motility in the subject's digestive system is slower than the average digestive system, such that the food reaches the colon after a longer time than the average 10 hours. In such embodiments, processor **110** may recommend a treatment protocol having a long enough delay time so as to ensure that the capsule vibrates when it has reached the subject's large intestine, and does not vibrate prematurely.

In some embodiments the recommendation may also be based on data obtained from database **108**, the data relating to one or more other subjects. For example, in an initial treatment round, the subject profile **106** may indicate that the subject is a female aged 55. Processor **110** may access database **108** to identify treatment protocols and/or vibration protocols that were successfully used to treat other females having similar ages, for example aged 50-60. One such identified protocol may be suggested as the recommended treatment protocol for the subject, or a new treatment protocol, including characteristics of a number of such identified protocols, may be generated as the recommended treatment protocol for the subject.

As described in further detail hereinbelow, the method described herein is iterative, and subject profile **106** may be updated to reflect the response of the subject to treatment with a specific treatment protocol. As such, in subsequent treatment rounds, processor **110** may use data relating to such responses when generating the recommendation for the next treatment protocol to be used.

Returning to the example provided above, the subject profile **106** may, in a later treatment round, indicate that the subject's condition did not improve when treated with a vibration protocol providing capsule vibration at a frequency of 150Hz. The processor may then recommend an updated vibration protocol having a different vibration frequency.

Selection of a subsequent treatment protocol may also be based on data from the database, relating to at least one other user. In the example above in which the subject's condition did not improve when treated with a vibration protocol providing capsule vibration at a frequency of 150Hz, the processor may, when identifying in database **108** potential treatment protocols, limit the identified protocols to ones providing vibration at a higher frequency, provided that the frequency is within a predetermined permissible range, such as up to 250Hz. As another alternative, the processor may identify treatment protocols that were successfully used to treat females aged 50-60 which did not respond well to treatment with capsule vibration at a frequency of 150Hz.

When updating the vibration protocol or treatment protocol in a second or subsequent treatment round, the updated recommended treatment protocol may change one or more parameters of the vibration protocol or of the treatment protocol, relative to a previous recommendation. For example, the updated recommendation may change the vibration frequency, the delay time until starting the vibration protocol, the duty cycle, the segment in the GI tract in which the capsule is intended to vibrate, the length of the vibration time in each vibration cycle, the rest time of each vibration cycle, and/or vibration intensity.

As seen at step **206**, the processor **110** may then check whether or not the obtained recommended treatment protocol is significantly different from a previously used treatment protocol. Naturally, in an initial iteration of the method described herein, step **206** would be obviated. In some embodiments, a treatment protocol would be considered 'significantly different' from another treatment protocol if the vibration protocol and/or the treatment procedures defined by the treatment protocol, or any portion thereof, is not in the range of allowed treatment protocols and/or characteristics defined for the subject, as described hereinabove.

If the recommended treatment protocol is significantly different from the treatment protocol used in a previous round of treatment, at step **208** the recommended treatment protocol is provided by processor **110** to decision maker **118**, which may be a human decision maker, such as a medical practitioner treating the subject, or may be an electronic decision maker, as described hereinabove.

As seen at step **210**, input from the decision maker is received by processor **110**. The decision maker may require that the recommended treatment protocol be modified prior to treating the subject, or may indicate that the recommended treatment protocol,

or a similar treatment protocol based on the recommended treatment protocol, should not be used for the subject, and such requirements may be provided as the input. In embodiments in which the decision maker is human, the input may be provided via user interface **104** and input module **102**.

At step **212**, processor **110** checks whether or not the decision maker has approved treating the subject using a treatment protocol which is based on the recommended treatment protocol. If processor **110** identifies that the decision maker has not approved use of a treatment protocol based on the recommended protocol, the method returns to step **204** for selection of another recommended treatment protocol.

Otherwise, if processor **110** identifies that the decision maker approved use of the recommended treatment protocol, at step **214** the processor checks whether or not the decision maker has required making any changes to the recommended treatment protocol in order to obtain the treatment protocol to be used. As seen at step **216**, if such changes are required, processor **110** applies the changes to the recommended treatment protocol, thereby to generate the treatment protocol to be used.

Once the treatment protocol is generated at step **216**, the generated treatment protocol, or, in some embodiments, only the vibration protocol defined thereby, is provided by processor **110** to capsule control unit **116** at step **218**. Alternately, if no changes were required to the recommended treatment protocol (at step **214**), or if the recommended treatment protocol is not significantly different from the treatment protocol used in an immediately previous round of treatment (at step **208**), the treatment protocol to be used is set to be identical to the recommended treatment protocol, and the treatment protocol, or only the vibration protocol defined thereby, is provided by processor **110** to capsule control unit **116**, at step **218**.

As another alternative, the method may start from step **218**, for example by providing to the capsule control unit **116** a default treatment protocol or a default vibration protocol to be used in a first treatment iteration. In such embodiments, the default treatment protocol or the default vibration protocol may be provided by the manufacturer of the capsule or by a medical practitioner for any subject beginning treatment using the system of Figure 1, regardless of the subject's profile or of any data collected in the database regarding other subjects. In other embodiments, the method may begin with steps **200** and **202** so as to create the subject profile, and may then

proceed directly to step **218** wherein the default treatment protocol or default vibration protocol is provided to the capsule control unit **116**.

Once the capsule control unit **116** has received the vibration protocol to be used, possibly as part of the treatment protocol to be used, at step **220** the capsule control unit **116** programs a programmable vibrating ingestible capsule, such as capsule **114a** or **114b**, to implement the vibration protocol upon activation of the capsule or upon ingestion thereof, substantially as described hereinabove with respect to Figure 1. In some embodiments, the capsule control unit **116** also provides output to the subject or to a caretaker thereof, for example via a display or other user interface, the output indicating the treatment procedures defined in the treatment protocol to be used.

As seen at step **222**, once the programmable vibrating ingestible capsule (e.g. **114a** or **114b**) has been programmed to implement the vibration protocol, the capsule is activated, for example by the activation module of capsule control unit **116** as described hereinabove, and is provided to the subject for ingestion thereof, thereby to treat the subject. As explained hereinabove, the subject or a caretaker thereof is notified of the treatment procedures, and is instructed to ingest the programmed capsule in accordance with the treatment procedures defined in the treatment protocol being used.

In some embodiments, the first vibrating ingestible capsule used to effect the first iteration of treatment is not a programmable capsule, but rather a programmed capsule, programmed to implement a specific vibration protocol, such as the default vibration protocol, for example as described hereinabove with reference to capsule **114a** of Figure 1. In some such embodiments, the method may begin at step **222**, by activation of the programmed capsule and treatment of the subject therewith. In other embodiments, the method may begin with steps **200** and **202** so as to create the subject profile, and may then proceed directly to step **222** wherein the programmed capsule is activated and used to treat the subject.

During treatment of the subject, or following such treatment, processor **110** receives feedback from a user, which may be the subject, a medical practitioner treating the subject, and/or a caretaker of the subject, regarding the subject's response to the treatment, as seen at step **224**. In some embodiments, the feedback is provided to processor user interface **104** and input module **102**.

In some embodiments, the feedback may indicate times at which the subject experienced bowel movements during or following treatment in accordance with a

specific treatment protocol, or a number of spontaneous bowel movements (SBM) experienced during or following the treatment.

In some embodiments, the feedback may indicate a physical feeling experienced by the subject during or following treatment in accordance with a specific treatment protocol, such as a feeling of complete evacuation following a bowel movement, straining, bloating, gas, flatulence, pain during bowel movements, pain at times other than during a bowel movement, or other adverse events occurring during or following the treatment. For example, the subject may provide feedback indicating that vibration was felt when the capsule was passing through the rectal area of the subject, or that stomach pains were relieved following the treatment.

In some embodiments, the feedback may indicate treatment procedures used by the subject during implementation of the treatment protocol, such as, for example, a time of day at which a vibrating ingestible capsule was ingested.

In some embodiments, the feedback may indicate at least one characteristic of fecal matter excreted by the subject during or following the treatment in accordance with the treatment protocol. For example, the subject may provide feedback indicating the Bristol stool measure of a bowel movement following the treatment.

At step **226**, the processor **110** may receive feedback from one or more sensors **120**. In some embodiments, the sensor is mounted in the toilet-bowl, and provides information regarding expelling of the vibrating ingestible capsule from the body of the subject. In some embodiments, the information includes an indication of a time at which the vibrating ingestible capsule was expelled from the body of the subject. In some embodiments, the information includes an identification of the expelled capsule. In some embodiments, the information includes information regarding fecal matter expelled by the subject, such as for example a Bristol stool measure of the fecal matter, as described hereinbelow.

As discussed hereinabove with respect to Figure 1, the toilet-bowl mounted sensor **120** may be any suitable sensor known in the art, such as that described in US Patent Application Publication No. 2009/0326514, or may be an inventive sensor as described hereinbelow with reference to Figures 3A to 7. An exemplary method by which the inventive sensors of Figures 3A to 7 obtain and provide feedback to processor **110** is described hereinbelow with respect to Figure 8.

In some embodiments, processor **110** may optionally compare, or cross-reference, the feedback provided by the subject to the feedback received from the sensor, as seen at step **228**, and may assign a reliability weight to the feedback from the subject based on the results of such comparison, as seen at step **230**.

For example, the processor **110** may compare the times at which the subject reported to have had bowel movements, and the time at which the sensor reported that the capsule was expelled. If the subject did not report a bowel movement at the time that the capsule was expelled, this is indicative of the subject not providing accurate feedback, and as such the sensor based feedback would be assigned a higher reliability weight than the feedback received from the subject.

At step **232**, the processor **110** updates the subject profile **106** based on the feedback provided by the subject, the medical practitioner, and/or the caretaker at step **224**, and/or based on the feedback provided by the sensor **120** at step **226**. In embodiments in which the subject and/or sensor feedback is assigned a reliability score at step **230**, the reliability score is taken into consideration when updating the subject profile, such that a greater significance is given to the more reliable feedback.

Subsequently, the method returns to step **204**, and an updated treatment protocol recommendation for the subject is obtained based on the updated user profile and based on data from database **108**, which data relates to at least one other subject.

In some embodiments, following updating of the subject profile **106** at step **232**, the processor **110** creates or updates an entry in database **108** relating to the subject, for example based on the update subject profile **106**, as seen at step **234**.

Reference is now made to Figures 3A, 3B, and 3C which are, respectively, a partially cut away side plan view, a partially cut away perspective view, and a top plan view of an inventive toilet-bowl mounted sensor **300** for capturing and identifying an ingestible capsule according to the present invention. In some embodiments, the toilet-bowl mounted sensor **300** may form part of the system of Figure 1, for example as sensor **120**.

As seen in Figures 3A-3C, sensor **300** includes a receptacle **302** surrounded at a top end thereof by a sealing rim **304**. The sensor **300** is adapted to be placed within a toilet bowl **306**, at a portion thereof in which sealing rim **304** engages, and seals against, the entire circumference of the toilet bowl, such that any excrement expelled into the toilet bowl would be caught in receptacle **302**.

In some embodiments, the receptacle **302** is formed of a wire frame or a mesh frame, having gaps or openings large enough to allow water and excrement to pass through, but smaller than the diameter of the capsule to be caught in the receptacle, such that the capsule does not fall through the frame.

Extending along toilet bowl **306**, from the exterior thereof to a controller **308** of sensor **300** (described in further detail hereinbelow), is at least one conduit **310** for providing water flow to sensor **300**, and at least one wire **312** for providing electrical power to sensor **300** and/or for enabling communication of sensor **300** with a remote device, such as processor **110** of Figure 1.

Reference is now made to Figure 4, which is a sectional view of an embodiment of receptacle **302** of toilet-bowl mounted sensor **300** in a stand-by mode.

As seen, receptacle **302** has a wire frame bottom surface **320** as described hereinabove, and side walls **322** surrounding a hollow **324**. At least one side wall, indicated in Figure 4 by reference numeral **322a** includes a plurality of water jets **326** which receive water from conduit **310** and are adapted to spray water into hollow **324**, in order to wash out excrement therefrom.

A pushing mechanism **330**, which in some embodiments includes a plurality of wire frame elements **332** (seen clearly in Figure 5A) connected to one another by a connector surface **334** (seen clearly in Figure 5A), is disposed within receptacle **302** and is movable relative to one of side walls **322b**, as explained in further detail hereinbelow. Pushing mechanism **330** is adapted to move back-and-forth along the receptacle **302** between side walls **322b** and **322c**, so as to provide mechanical force on excrement in the receptacle for breaking thereof into pieces that can be flushed out of the receptacle via the wire frame bottom **320**. In some embodiments, pushing mechanism **330** is further adapted to sense the Bristol stool measure of the excrement in receptacle **302**, for example by sensing the force exerted by the motor driving the pushing mechanism **330** for breaking down the excrement.

A side of pushing mechanism distal to the side wall **322b** includes a diagonal section **336** terminating in a generally hemispherical ingress **338**, which, together with a corresponding diagonal section **340** and generally hemispherical ingress **342** formed in an opposing side wall **322c** of receptacle **302** are adapted for capturing a vibrating ingestible capsule and for measurement and identification thereof, as described in further detail hereinbelow.

Disposed beneath ingress **342** is a capsule releasing mechanism **344**, adapted, following capturing of an expelled capsule and identification thereof, to release the capsule from receptacle **302** for flushing thereof down the toilet. In some embodiments, releasing mechanism **344** comprises a hatch **346** (seen clearly in Figure 7), hingedly connected to side wall **322c**, which is adapted to open and release a captured capsule following identification thereof, and to close back immediately following removal of the capsule.

It will be appreciated that though in the illustrated embodiment the bottom surface **320** is slanted toward side wall **322c** and ingress **342**, so as to allow gravity to assist a capsule in arriving at its capturing location as described in further detail hereinbelow, in some embodiments the bottom surface **320** may be horizontal and perpendicular to the side walls **322b** and **322c**.

Included within side wall **322c**, adjacent to ingress **342**, is a capsule identification mechanism **350**, which may include one or more sensors **352**, a vision system **354**, a communication system, and/or a weighing mechanism, for measuring the dimensions and/or weight of a captured capsule, and/or for uniquely identifying the capsule.

As described in further detail hereinbelow, sensors **352** may be contact sensors or distance sensors adapted to sense contact between, or a distance between, diagonal sections **336** and **340** and/or contact between a capsule captured between ingresses **338** and **342** and the ingress walls.

Vision system **354** has a field of view, and is typically adapted to view a wall of a captured capsule via the field of view, so as to uniquely identify the capsule. In some embodiments, the vision system may include a barcode reader adapted to identify a barcode printed onto the exterior of a captured capsule, a QR-code reader adapted to identify a QR-code printed onto the exterior of a captured capsule, an OCR mechanism adapted to scan and interpret text or an identification number printed onto the exterior of a captured capsule, or an image capturing and analysis mechanism adapted to capture an image of the exterior of the capsule and to analyze the captured image thereby to identify the capsule or a manufacturer thereof.

In some embodiments, the communication system includes an RFID tag reader adapted to read an RFID tag mounted on the exterior of a captured capsule, thereby to

identify capsule. The communication system may be incorporated in the vision system or may be separate therefrom.

The weighing mechanism may be disposed on bottom surface **320** of the receptacle **302**, preferably adjacent to ingress **342**, so as to weigh a capsule captured between ingresses **338** and **342**, as described in further detail hereinbelow. In some embodiments, weighing mechanism is mounted onto releasing mechanism **344**.

Controller **308** of receptacle **302** may be disposed on or within one or more of side walls **322** and is adapted to control movement, and in some embodiments sensing capabilities, of pushing mechanism **330**, and to control operation of identification mechanism **350** and of releasing mechanism **344**. Additionally, controller **308** is adapted to provide power to pushing mechanism **330**, releasing mechanism **344** and identification mechanism **350**.

In some embodiments, controller **308** is adapted to receive input from weighing mechanism **344** and/or from identification mechanism **350**, so as to identify that a capsule has been captured, and the dimensions, weight, and/or identity of the captured capsule. In some embodiments, controller **308** includes a clock for identifying a time at which a capsule was captured and/or identified.

Typically, controller **308** is adapted to communicate with a remote location, such as processor **110**, via a communication module forming part of the controller and/or via a communication wire **310** extending from receptacle **302**, along toilet bowl **306** to the remote location. In some embodiments, the controller **308** may communicate the time at which the capsule was captured, and information regarding the capsule, such as its dimensions, weight, and/or identity, to the remote location, for use thereof. For example, in the embodiment of Figures 1 and 2, the information provided by the controller **308** may be used to identify a time that the capsule has spent in the GI tract of the subject, or an order at which a plurality of ingested capsules were expelled.

In some embodiments, the controller **308** may further communicate information relating to characteristics of the expelled fecal matter, such as a Bristol stool measure thereof, as sensed by pushing mechanism **330** or by the motor driving the pushing mechanism. In some such embodiments, the controller **308** only communicates the information relating to the fecal matter if a capsule was captured, or if a capsule of a specific type was captured.

In the embodiment illustrated in Figure 4, controller **308** has a first portion **308a** disposed within side wall **322b** and adapted to control and to provide power to pushing mechanism **330**, and a second portion **308b** disposed within side wall **322c** and adapted to control and to provide power to releasing mechanism **344** and identification mechanism **350**. However, any other arrangement of controller **308** is considered within the scope of the invention.

Reference is now made to Figures 5A and 5B, which are, respectively, a perspective view and a sectional view of the receptacle **302**, in an operational mode. As seen, pushing mechanism **330** is being pushed away from side wall **322b** and toward side wall **322c**, as indicated by arrow **370**. A vibrating ingestible capsule **372**, which was expelled from the body of a subject together with fecal matter thereof, is caught by receptacle **302**, and may be pushed by pushing mechanism **330** toward ingress **342** and identification mechanism **350**. In some embodiments, capsule **372** is generally ovoid, is symmetrical about a longitudinal axis **374**, and has a generally circular cross-section in a direction perpendicular to axis **374**.

It will be appreciated that pushing mechanism **330** may be pushed in the direction of arrow **370** and back in the opposite direction multiple times, so as to break down fecal matter caught in receptacle **302** for removal thereof via bottom surface **320**. In some embodiments, motion of pushing mechanism **330** is accompanied by water spray from jets **326** for washing away fecal matter and cleaning of the capsule, prior to pushing and/or capturing thereof.

Reference is now made to Figure 6, which is a partial sectional view of receptacle **302** in a capsule capturing mode. As seen in Figure 6, pushing mechanism **330** is pushed distally from side wall **322b** until it engages side wall **322c**, such that diagonal sections **336** and **340** engage one another, and such that the capsule **372** is trapped between ingresses **338** and **342**. It is a particular feature of the present invention that the arrangement of the wire frame of bottom surface **320**, and ingress **338** of pushing mechanism **330**, cause capsule **372** to be captured such that longitudinal axis **374** is generally parallel to side wall **322c**, and such that the circular cross section of the capsule substantially fills the circular cross-section formed by ingresses **338** and **342**.

It is a particular feature of the teachings herein that capturing of the capsule, results in measurement of its dimensions. Specifically, sensors **352** of the identification mechanism **350** identify the dimensions of the capsule. Sensors **352a** mounted along

section **340** identify whether or not diagonal sections **336** and **340** engage one another - if the diagonal sections do not engage one another when the capsule is captured, the capsule has a greater circumference than that of the circular cross section of the cavity between ingresses **338** and **342**. Sensors **352b** mounted along ingress **342** identify whether or not the circumference of the capsule engages the ingress wall - if the circumference of the capsule does not engage the ingress walls when the capsule is captured, the capsule has a smaller circumference than that of the circular cross section of the cavity between ingresses **338** and **342**. In some embodiments, weighing mechanism **358**, which may be disposed beneath ingresses **338** and **342**, identifies the weight of capsule **372** while the capsule is captured.

In some embodiments, the circular cross-section of the cavity between ingresses **338** and **342** may be specifically sized to match the cross section of a particular type of capsule, such that controller **308** may identify, based on input received from sensors **352**, whether or not the captured capsule is of the particular type. Additionally, even if the dimensions of captured capsule **372** match the expected dimensions, controller **308** may use the identified weight of the capsule to determine whether the capsule is indeed of the expected particular type. The controller **308** may report capture of the capsule, for example to processor **110**, if the capsule has the expected dimensions and weight, and may choose not to report capture of the capsule if it is differently sized or has a different weight.

When the capsule **372** is captured between ingresses **338** and **342**, vision system **354** may view a portion of the exterior of the capsule **372** via field of view **355**, and may thus uniquely identify the capsule. As described above, in one example, the capsule may have a barcode printed thereon, and the vision system includes a barcode reader adapted to identify the capsule by reading the barcode printed thereon. In another example, the capsule may have a QR-code printed thereon, and the visions system includes a QR-code reader adapted to identify the capsule by reading the code printed thereon. In yet another example, the capsule has a specific logo and/or an identification or serial number printed on the exterior thereof, and vision system **354** includes an OCR mechanism or other mechanism suitable for reading the logo and serial number, thereby to identify the capsule.

In some embodiments, identification of the capsule may alternately or additionally be accomplished by communication system **356**. For example, the

communication system may include an RFID tag reader, which may identify an RFID tag mounted on the exterior of the captured capsule. Following identification of the capsule, the controller **308** may report capturing of the capsule, and information about the capsule, to a remote location, as described hereinabove. In some embodiments, the controller **308** may report the information only if the capsule is identified as belonging to a specific manufacturer, or as being of a specific type, for example as described hereinabove.

Reference is now made to Figure 7, which is a sectional view of receptacle **302** in a capsule releasing mode. As seen in Figure 7, following completion of the capsule identification, pushing mechanism **330** may be displaced away from side wall **322c** so as to release the capsule **372** from the hollow between ingresses **338** and **342**, and hatch **346** of releasing mechanism **344** may open, for example by rotating downwardly relative to bottom surface **320**, so as to allow the capsule **372** to drop out of receptacle **302b**, and to be flushed down the toilet. In some embodiments, the releasing mechanism is electrically controlled by controller **308**, such that hatch **346** recloses after a predetermined duration during which it is assumed that the capsule has been removed from the receptacle, or after sensors, for example on hatch **346**, identify releasing of the capsule.

Reference is now additionally made to Figure 8, which is a schematic flowchart of a method for capturing and identifying an ingestible capsule that has been expelled into a toilet bowl according to the present invention, the method utilizing the inventive toilet-bowl mounted sensor **300** of any one of Figures 3A-7.

At an initial step **400**, excrement including an ingestible capsule is captured in a receptacle, such as receptacle **302**, of the sensor **300**. The pushing mechanism **330** is pushed forward (toward side wall **322c**) and back (away from side wall **322c** and toward side wall **322b**), so as to apply mechanical force to the excrement for breaking down thereof, as seen at step **402**.

Subsequently or simultaneously to the breaking action of the pushing mechanism, at step **404**, water jets **326** are activated to wash away excrement, which may be removed from the receptacle via the wire frame of bottom surface **320**.

In some embodiments, steps **402** and **404** may be repeated for a predetermined number of cycles, a predetermined duration, or until controller **308** determines that there is little or no residual excrement remaining on the capsule or in the receptacle.

At step **406**, following removal of excrement and cleaning of the capsule, the pushing mechanism **330** is displaced toward side wall **322c**, pushing the capsule in that direction, until the pushing mechanism **330** can move no further.

At step **408**, controller **308** assesses whether or not the pushing mechanism has engaged the side wall of the receptacle, and more specifically, whether or not diagonal sections **336** and **340** engage one another, for example using sensors **352a** (Figure 7).

If the pushing mechanism can move no further, but diagonal sections **336** and **340** do not engage one another, this is indicative of the captured capsule having a greater cross-section circumference than the expected capsule, and at step **410** the controller concludes that the captured capsule is not of the expected type. At step **412**, the releasing mechanism is operated to release the captured capsule, for example by opening hatch **346** as described hereinabove.

Otherwise, if at step **408** it is determined that the diagonal sections **336** and **340** engage one another, at step **414** controller **308** assesses whether the exterior surface of the captured capsule engages the surface of the cavity between ingresses **338** and **342**, for example by using sensor **352b** (Figure 7).

If the capsule does not engage the surface of the cavity when diagonal sections **336** and **340** engage one another, this is indicative of the captured capsule having a smaller cross-section circumference than the expected capsule, and the method continues to step **410** where the controller concludes that the captured capsule is not of the expected type and to step **412** where the capsule is released from the receptacle.

If the capsule is determined to have the expected dimensions, controller **308** may receive from the weighing mechanism information relating to a weight of the captured capsule, and may determine, at step **418**, whether or not the measured weight of the capsule matches, or is within a predetermined margin of error, of an expected weight of the capsule. If the measured weight of the capsule does not match the expected weight, the method continues to step **410** where the controller concludes that the captured capsule is not of the expected type and to step **412** where the capsule is released from the receptacle.

Otherwise, the controller concludes that the capsule is of the expected type, and at step **422** the identification mechanism uniquely identifies the capsule, for example by reading a barcode, QR code, unique identification number or string of characters, or an RFID tag located on the exterior surface of the capsule.

At step **424** the controller may report to a remote location, such as processor **110** of Figure 1, information relating to the capsule, such as the time the capsule was expelled from the body of the user or the time that the capsule was identified by the identification mechanism, and/or the unique identification of the capsule, which information may be used to better understand the subject's response to treatment with the capsule. In some embodiments, the controller may further report information regarding the fecal matter, such as a Bristol stool measure thereof, as identified by the pushing mechanism and as described hereinabove. As discussed in detail hereinabove, the reporting may be carried out by wired or wireless communication between the controller **308**, or another portion of the sensor **300**, and the remote location.

Subsequently or in parallel to such reporting, the capsule is released from the receptacle, at step **412**.

It will be appreciated that certain features of the invention, which are, for clarity, described in the context of separate embodiments, may also be provided in combination in a single embodiment. Conversely, various features of the invention, which are, for brevity, described in the context of a single embodiment, may also be provided separately or in any suitable sub-combination.

Although the invention has been described in conjunction with specific embodiments thereof, it is evident that many alternatives, modifications and variations will be apparent to those skilled in the art. Accordingly, it is intended to embrace all such alternatives, modifications and variations that fall within the spirit and broad scope of the appended claims. All publications, patents and patent applications mentioned in this specification are herein incorporated in their entirety by reference into the specification, to the same extent as if each individual publication, patent or patent application was specifically and individually indicated to be incorporated herein by reference. In addition, citation or identification of any reference in this application shall not be construed as an admission that such reference is available as prior art to the present invention.

CLAIMS

1. A toilet-bowl mounted sensor, comprising:

a receptacle adapted to be mounted within a toilet bowl and to receive excrement therein, said receptacle including:

a first side wall, a second side wall, a third side wall, and a fourth side walls, said first and fourth side walls being generally opposite one another, said second and third side walls being generally opposite one another, and said third side wall including a side wall ingress; and

a floor surface attached to said first, second, third, and fourth side walls, said floor surface comprising a wire frame or a mesh including openings suitable for removal of excrement from said receptacle;

a pushing mechanism, movable relative to said receptacle and adapted to push content of said receptacle, said pushing mechanism including a movable ingress;

a capsule measuring and/or identification mechanism, adapted to at least one of measure dimensions of an ingestible capsule included in said excrement and uniquely identify said ingestible capsule;

a capsule releasing mechanism for releasing said ingestible capsule from said receptacle; and

a controller for controlling operation of said pushing mechanism, said capsule releasing mechanism, and said capsule measuring and/or identification mechanism,

wherein said capsule measuring and/or identification mechanism includes a hollow formed between said side wall ingress and said movable ingress when said pushing mechanism is adjacent said third side wall, said hollow being suitable for enclosing said ingestible capsule.

2. The sensor of claim 1, further comprising a seal circumferentially arranged about said receptacle, wherein said receptacle and said seal are sized to circumferentially engage and seal against said toilet bowl along an entire cross section thereof, such that all matter expelled into said toilet bowl is received in said receptacle.

3. The sensor of claim 1 or claim 2, wherein at least one of said first, second, third, and fourth side walls includes a plurality of water jets, functionally associated with a conduit, said water jets adapted to receive water from said conduit and to spray said water into said receptacle for washing out excrement therefrom.

4. The sensor of any one of claims 1 to 3, wherein said openings in said floor surface are suitably sized so that said ingestible capsule cannot pass through said openings.

5. The sensor of any one of claims 1 to 4, wherein said floor surface is angled from said second side wall toward said third side wall, such that gravity assists in directing said ingestible capsule toward said capsule measuring and/or identification mechanism.

6. The sensor of any one of claims 1 to 5, wherein said pushing mechanism is adapted to apply force to said excrement in said receptacle thereby to break-down the excrement to be suitably sized for removal via said openings.

7. The sensor of claim 6, wherein, during said motion, said pushing mechanism is adapted to sense at least one characteristic of said excrement based on an amount of said force applied to said excrement in order to break down said excrement.

8. The sensor of any one of claims 1 to 7, wherein said hollow formed between said movable ingress and said side wall ingress has a cross section, said cross section being suitably sized to match at least one of a cross section and a diameter of a specific type of ingestible capsule expected to be expelled into said receptacle.

9. The sensor of any one of claims 1 to 8, wherein said capsule measuring and/or identification mechanism includes at least one first sensor mounted on said third side wall and adapted to sense engagement between a surface of said pushing mechanism and said third side wall.

10. The sensor of any one of claims 1 to 9, wherein said capsule measuring and/or identification mechanism includes at least one second sensor mounted onto said side

wall ingress, and adapted to sense engagement between an exterior surface of an ingestible capsule captured in said hollow and a surface of said side wall ingress.

11. The sensor of any one of claims 1 to 10, said capsule measuring and/or identification mechanism including a weighing mechanism adapted to sense a weight of an ingestible capsule captured in said hollow.

12. The sensor of any one of claims 1 to 11, wherein said capsule measuring and/or identification mechanism includes a capsule identification system, adapted to uniquely identify an ingestible capsule captured in said hollow.

13. The sensor of any one of claims 1 to 12, wherein said capsule releasing mechanism includes a hinged portal formed in said floor surface beneath said side wall ingress, such that opening of said portal releases said ingestible capsule from said hollow and from said receptacle.

14. The sensor of any one of claims 1 to 13, wherein said controller is adapted to receive input from said capsule measuring and/or identification mechanism relating to said ingestible capsule following capturing thereof in said hollow, and to provide capsule information based on said input to a remote location.

15. The sensor of any one of claims 1 to 14, wherein said controller is adapted to receive input from said pushing mechanism relating to at least one characteristic of said excrement, and to provide excrement information based on said input to a remote location.

16. The sensor of claim 14 or claim 15, wherein said capsule information provided to said remote location includes at least one of:

a time at which said ingestible capsule was expelled into said receptacle or captured in said hollow;

dimensions of said ingestible capsule;

a weight of said ingestible capsule; and

an identification of said ingestible capsule.

17. The sensor of any one of claims 1 to 16, wherein said ingestible capsule has a diameter in the range of 5.5mm to 13.5mm.

18. The sensor of any one of claims 1 to 17, wherein said ingestible capsule has a length in the range of 12mm to 28.5mm.

19. A method for measuring and identifying an ingestible capsule expelled into a toilet bowl, the method comprising:

mounting a sensor according to any one of claims 1 to 18 in said toilet bowl, such that matter expelled into said toilet bowl, including the ingestible capsule, is received in said receptacle;

breaking down excrement included in said matter so that said excrement is sized to be removed from said receptacle via said openings in said floor surface;

pushing the ingestible capsule toward said third side wall thereby capturing the ingestible capsule in said hollow; and

measuring whether at least one of a cross section of the ingestible capsule matches an expected cross section and a diameter of the ingestible capsule matches an expected diameter.

20. The method of claim 19, further comprising, following said capturing, uniquely identifying said capsule.

21. The method of claim 19 or claim 20, further comprising reporting at least one of measurements of said ingestible capsule, a weight of said ingestible capsule, and an identity of said ingestible capsule to a remote location.

22. A system for treatment of a disorder in a gastrointestinal (GI) tract of a subject, the system comprising:

at least one input module adapted to receive input from at least one of the subject, a medical practitioner treating the subject, and a care giver of the subject;

a computer readable memory adapted to store a subject profile for the subject, said subject profile including subject data received as initial input by said at least one input module;

a database including data relating to subjects treated for disorders in the gastrointestinal tract and to treatment protocols used for said subjects;

a first vibrating ingestible capsule adapted to be activated to implement a first vibration protocol defined in a first treatment protocol, and adapted, in an operative mode, to deliver vibrations to a wall of the GI tract of the subject in accordance with said first vibration protocol, thereby to treat the subject;

a second programmable vibrating ingestible capsule adapted to be programmed and activated to implement a second vibration protocol defined in a second treatment protocol, and adapted, in an operative mode, to deliver vibrations to a wall of the GI tract of the subject in accordance with said second vibration protocol, thereby to treat the subject;

a processor, functionally associated with said at least one input module, said computer readable memory, and said database; and

at least one sensor adapted to provide to said processor information regarding expelling of said first vibrating ingestible capsule from the body of the subject,

wherein said at least one input module is adapted to receive feedback regarding a response of the subject to treatment in accordance with said first treatment protocol,

wherein said processor is configured, based on at least one of said information regarding expelling and said feedback, to:

automatically obtain an updated recommendation for an updated recommended treatment protocol based on said data included in said database, said data relating to at least one other subject of said subjects; and

effect programming of said second programmable vibrating ingestible capsule to implement said second vibration protocol, said second treatment protocol including said second vibration protocol being based on said updated recommended treatment protocol.

23. The system of claim 22, further comprising a capsule control unit functionally associated with said processor and with said at least one second programmable vibrating ingestible capsule, said capsule control unit adapted to receive from said processor said second vibration protocol and to program said second programmable vibrating ingestible capsule to implement said second vibration protocol.

24. The system of claim 22 or claim 23, wherein said feedback comprises at least one of:

feedback received from the subject indicating times at which the subject experienced bowel movements during or following said treatment in accordance with said first treatment protocol;

feedback received from the subject indicating a physical feeling experienced by the subject during or following said treatment in accordance with said first treatment protocol; and feedback received from the subject indicating at least one characteristic of fecal matter excreted by the subject during or following said treatment in accordance with said first treatment protocol.

25. The system of any one of claims 22 to 24, wherein said information regarding expelling includes at least one of:

a time at which said first vibrating ingestible capsule was expelled from the body of the subject; and

an identification of said first vibrating ingestible capsule.

26. The system of any one of claims 22 to 25, wherein said processor is further configured to use said subject data and said received feedback to update said database to reflect said response of the subject to said treatment in accordance with said first treatment protocol.

Figure 1

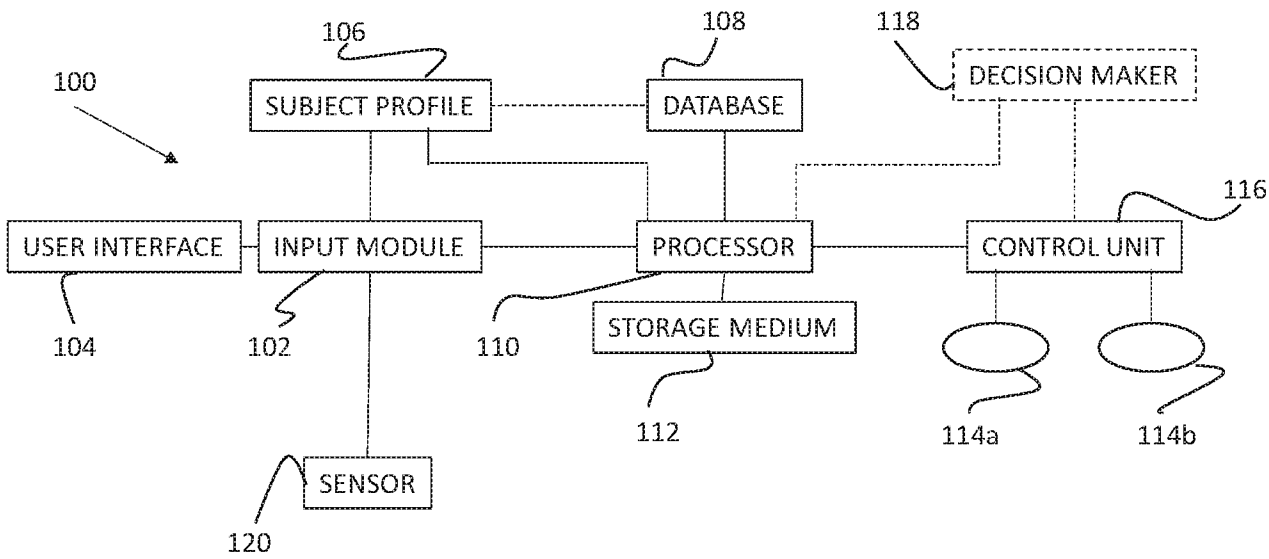
100
106
SUBJECT PROFILE
108
DATABASE
118
DECISION MAKER
116
USER INTERFACE
INPUT MODULE
PROCESSOR
CONTROL UNIT
104
102
110
STORAGE MEDIUM
112
114a
114b
SENSOR
120

Figure 2A

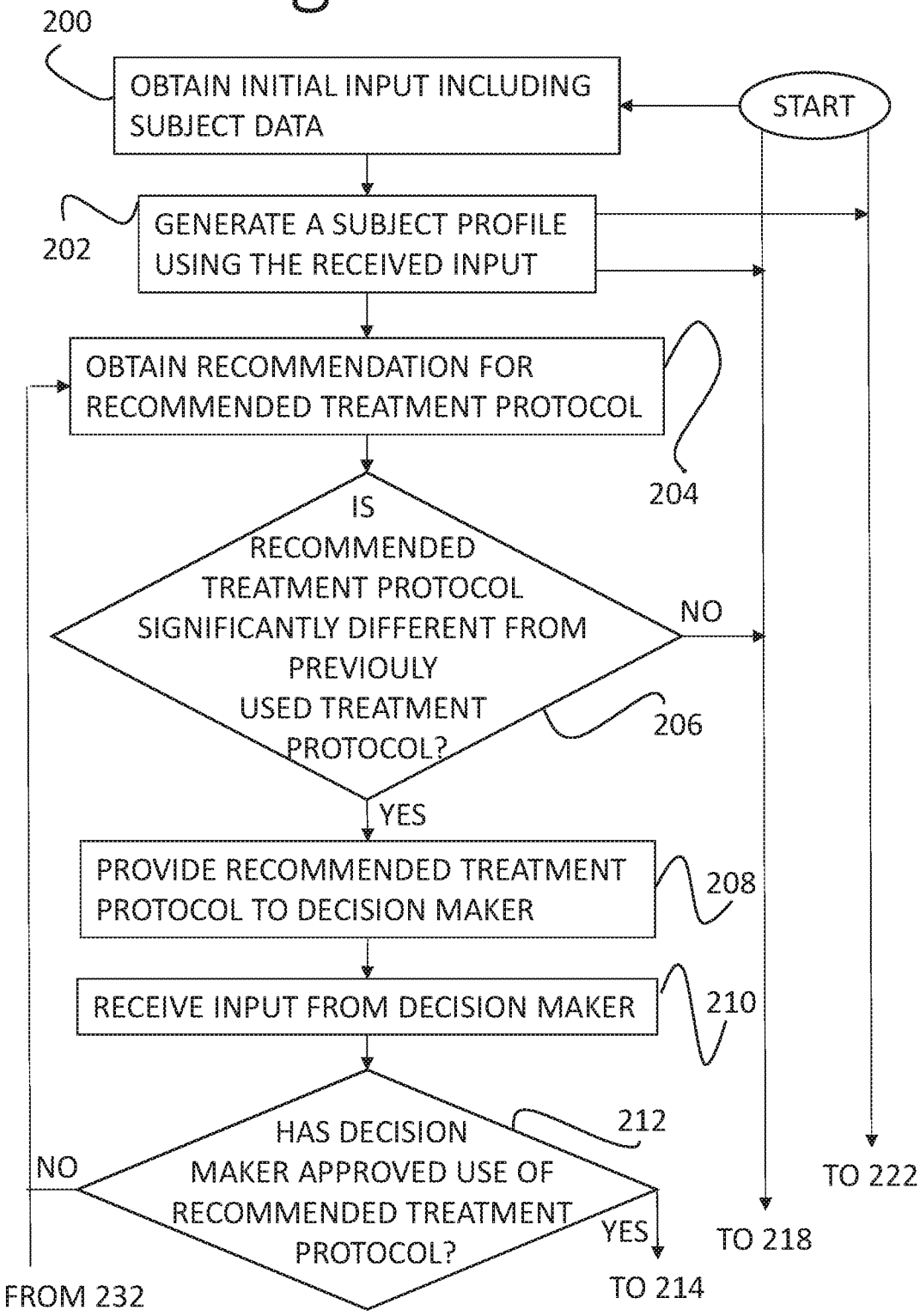
200
OBTAIN INITIAL INPUT INCLUDING SUBJECT DATA
START
202
GENERATE A SUBJECT PROFILE USING THE RECEIVED INPUT
OBTAIN RECOMMENDATION FOR RECOMMENDED TREATMENT PROTOCOL
204
IS RECOMMENDED TREATMENT PROTOCOL SIGNIFICANTLY DIFFERENT FROM PREVIOULY USED TREATMENT PROTOCOL?
NO
206
YES
PROVIDE RECOMMENDED TREATMENT PROTOCOL TO DECISION MAKER
208
RECEIVE INPUT FROM DECISION MAKER
210
HAS DECISION MAKER APPROVED USE OF RECOMMENDED TREATMENT PROTOCOL?
212
NO
YES
TO 222
TO 218
TO 214
FROM 232

Figure 2B

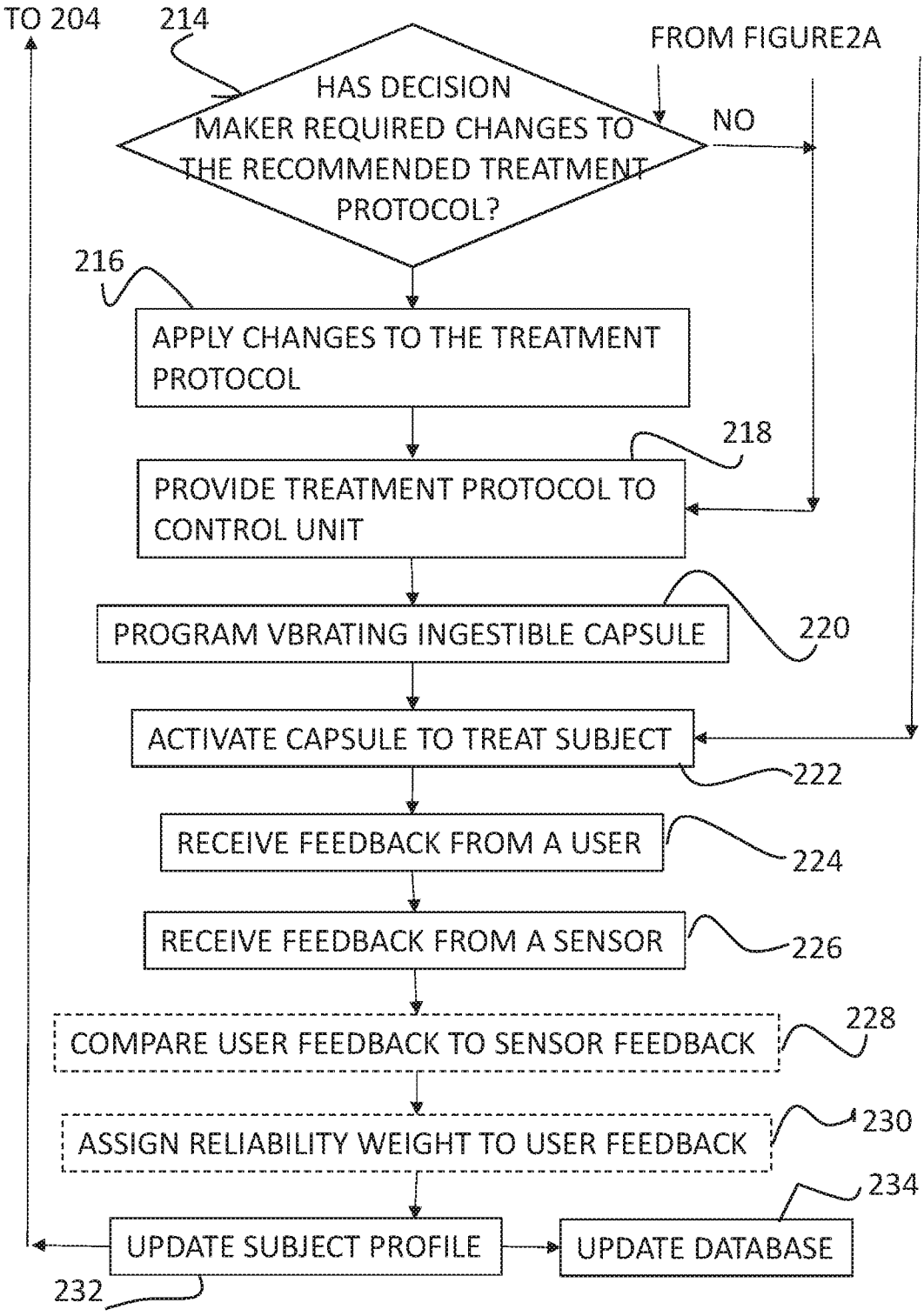
TO 204
214
FROM FIGURE2A
HAS DECISION MAKER REQUIRED CHANGES TO THE RECOMMENDED TREATMENT PROTOCOL?
NO
216
APPLY CHANGES TO THE TREATMENT PROTOCOL
218
PROVIDE TREATMENT PROTOCOL TO CONTROL UNIT
PROGRAM VBRATING INGESTIBLE CAPSULE
220
ACTIVATE CAPSULE TO TREAT SUBJECT
222
RECEIVE FEEDBACK FROM A USER
224
RECEIVE FEEDBACK FROM A SENSOR
226
COMPARE USER FEEDBACK TO SENSOR FEEDBACK
228
ASSIGN RELIABILITY WEIGHT TO USER FEEDBACK
230
234
UPDATE SUBJECT PROFILE
UPDATE DATABASE
232

Figure 3A

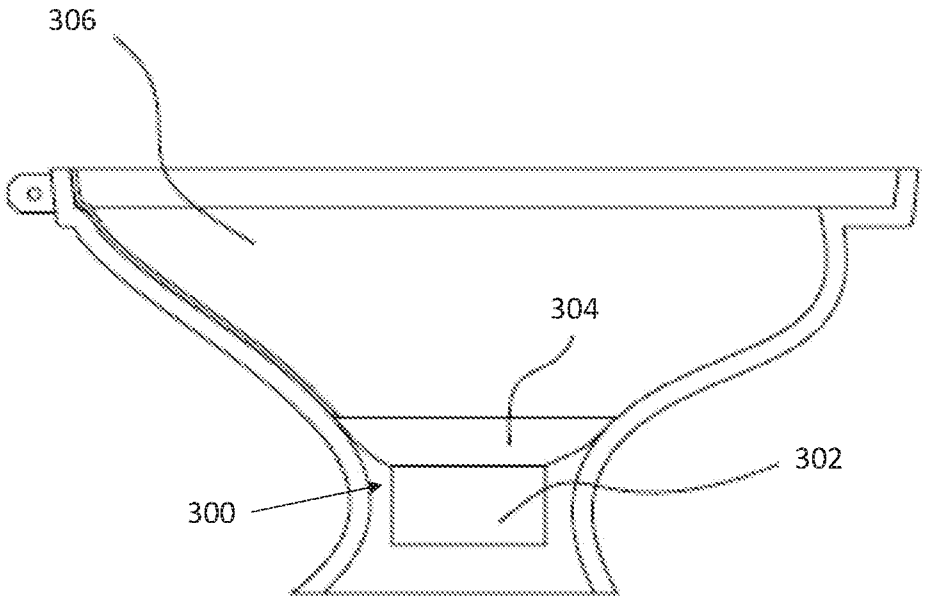

Figure 3B

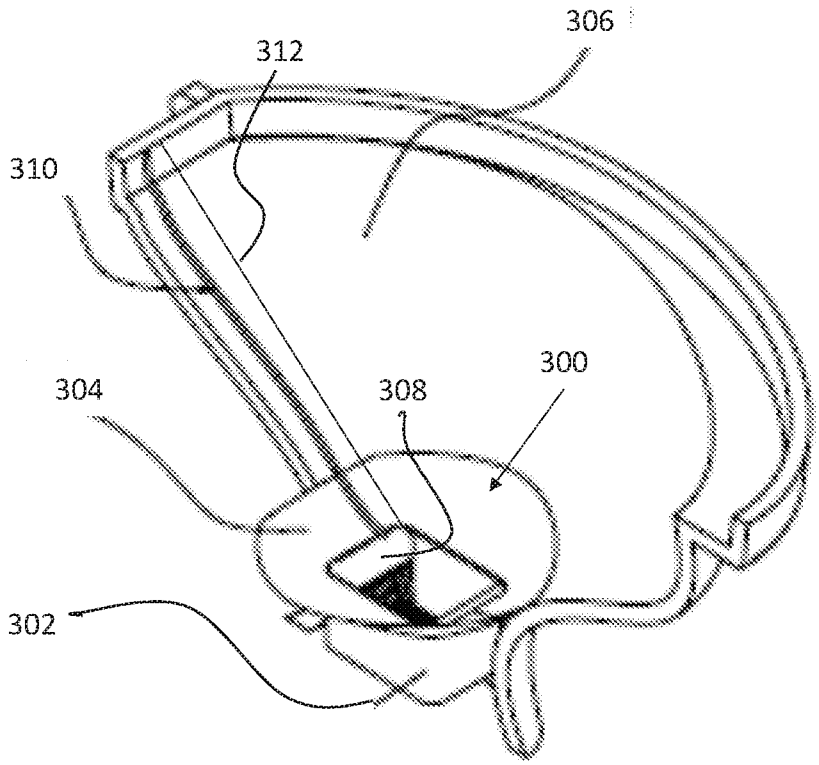

Figure 3C

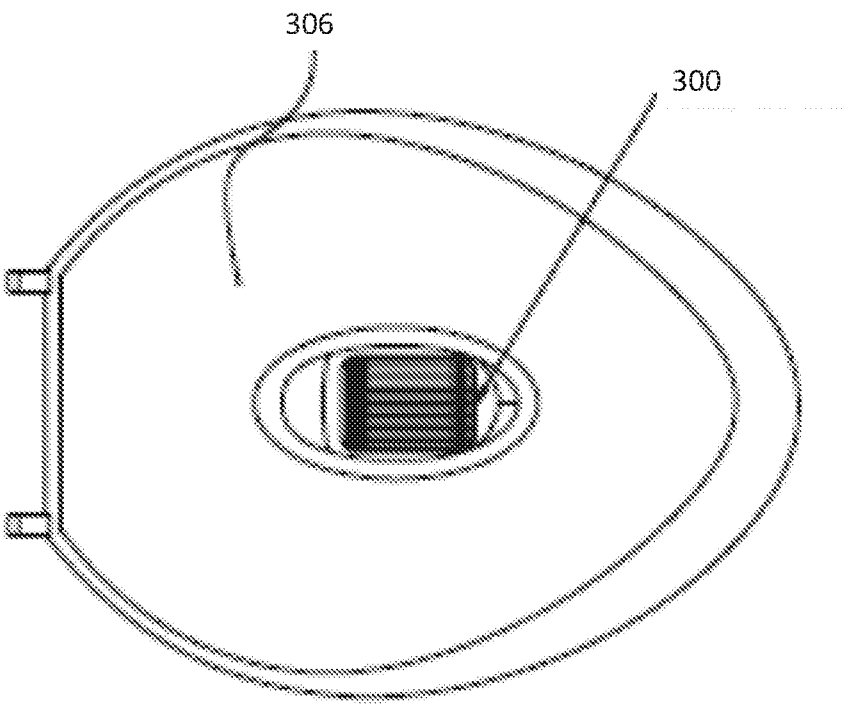

Figure 4

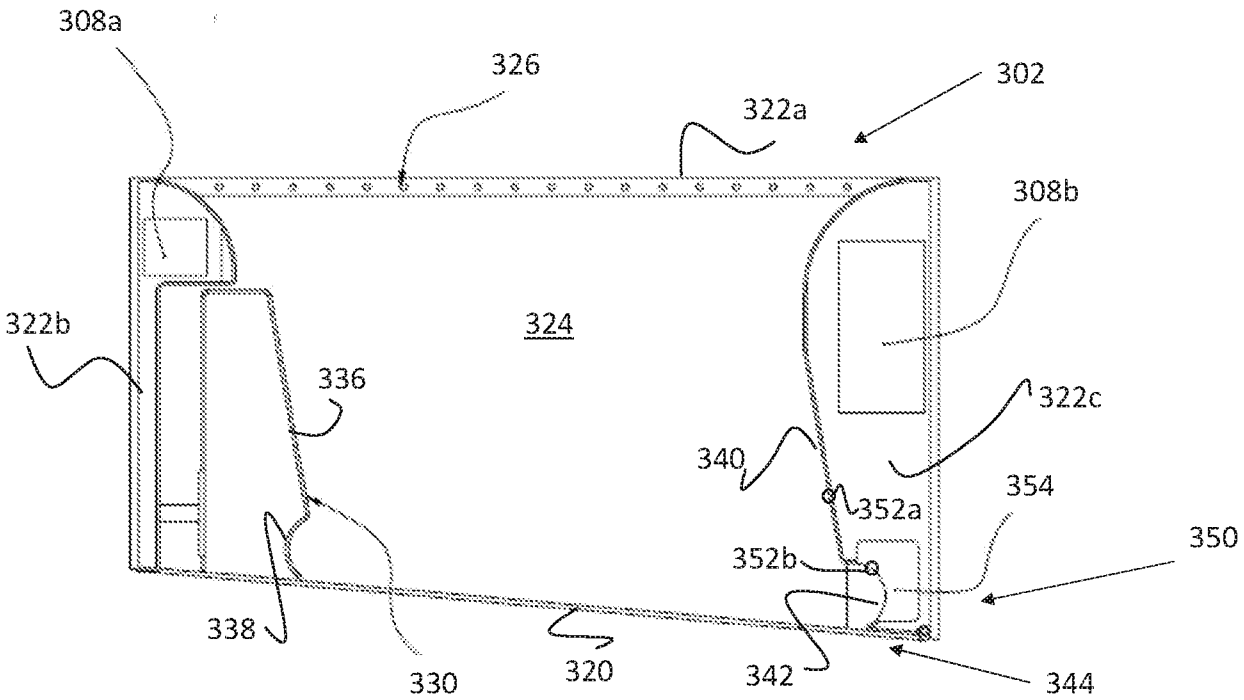
308a
326
302
322a
308b
322b
324
336
322c
340
352a
354
350
352b
338
330
320
342
344

Figure 5A

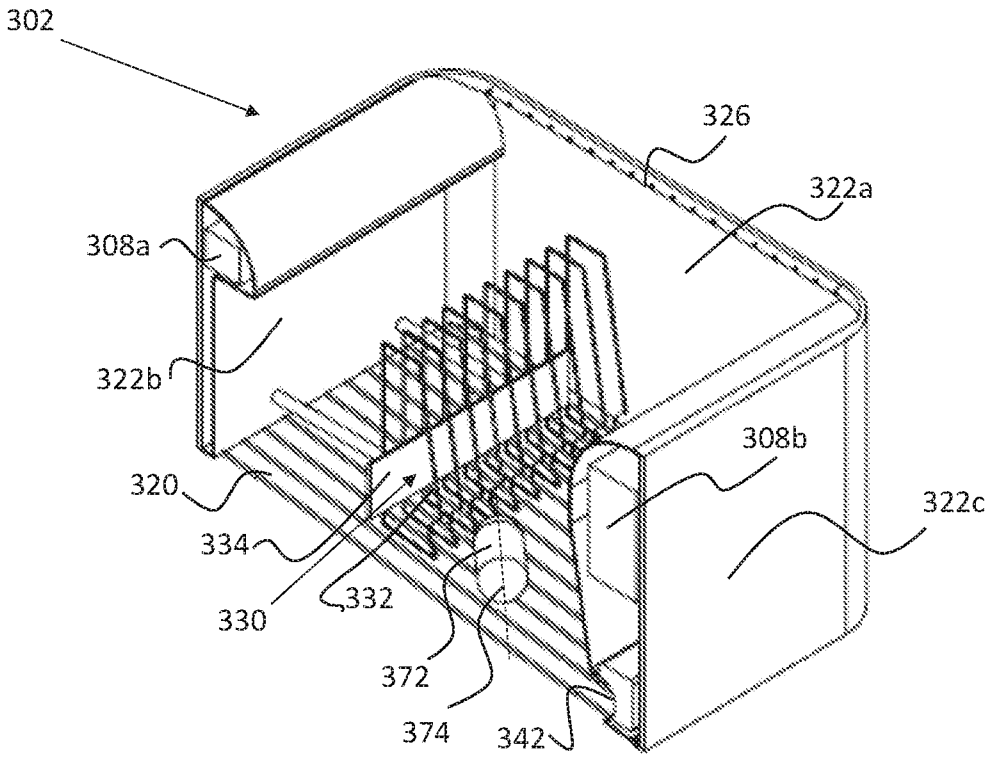

Figure 5B

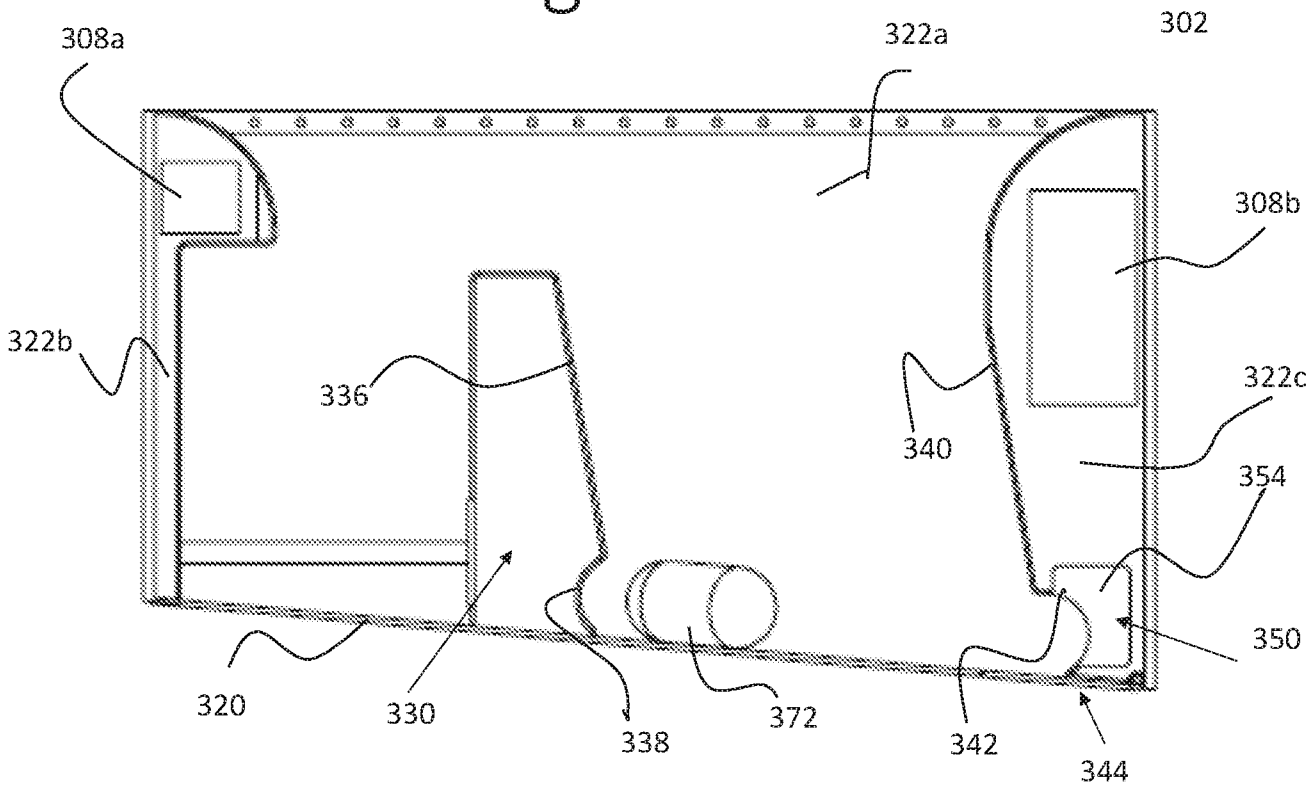
308a
322a
302
308b
322b
336
322c
340
354
350
320
330
338
372
342
344

Figure 6

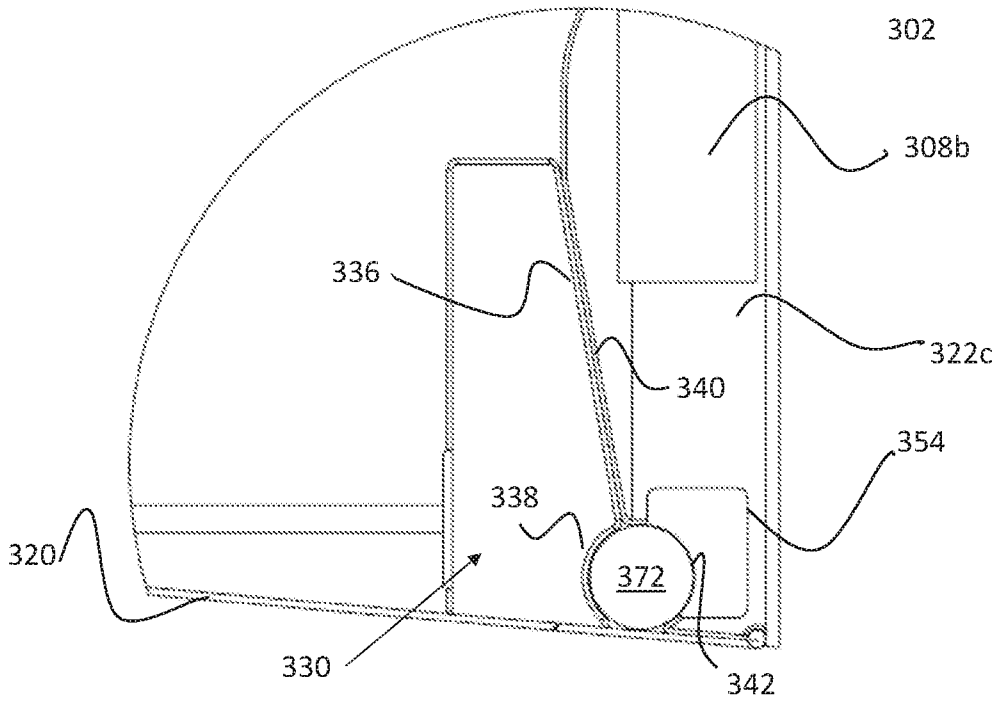

Figure 7

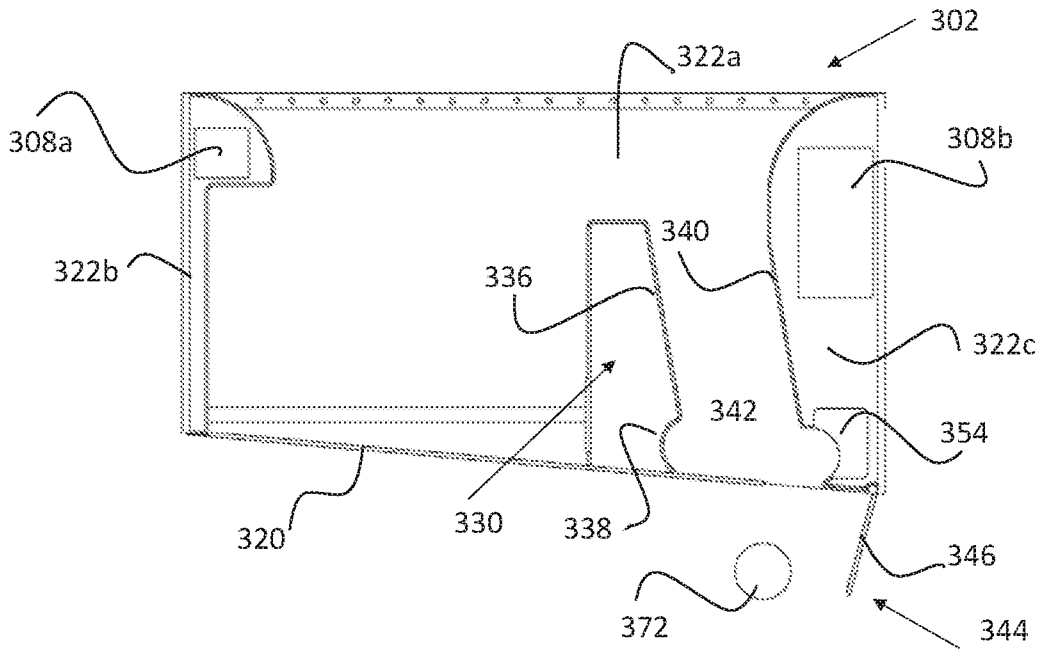
302
322a
308a
308b
340
322b
336
322c
342
354
320
330
338
346
372
344

Figure 8

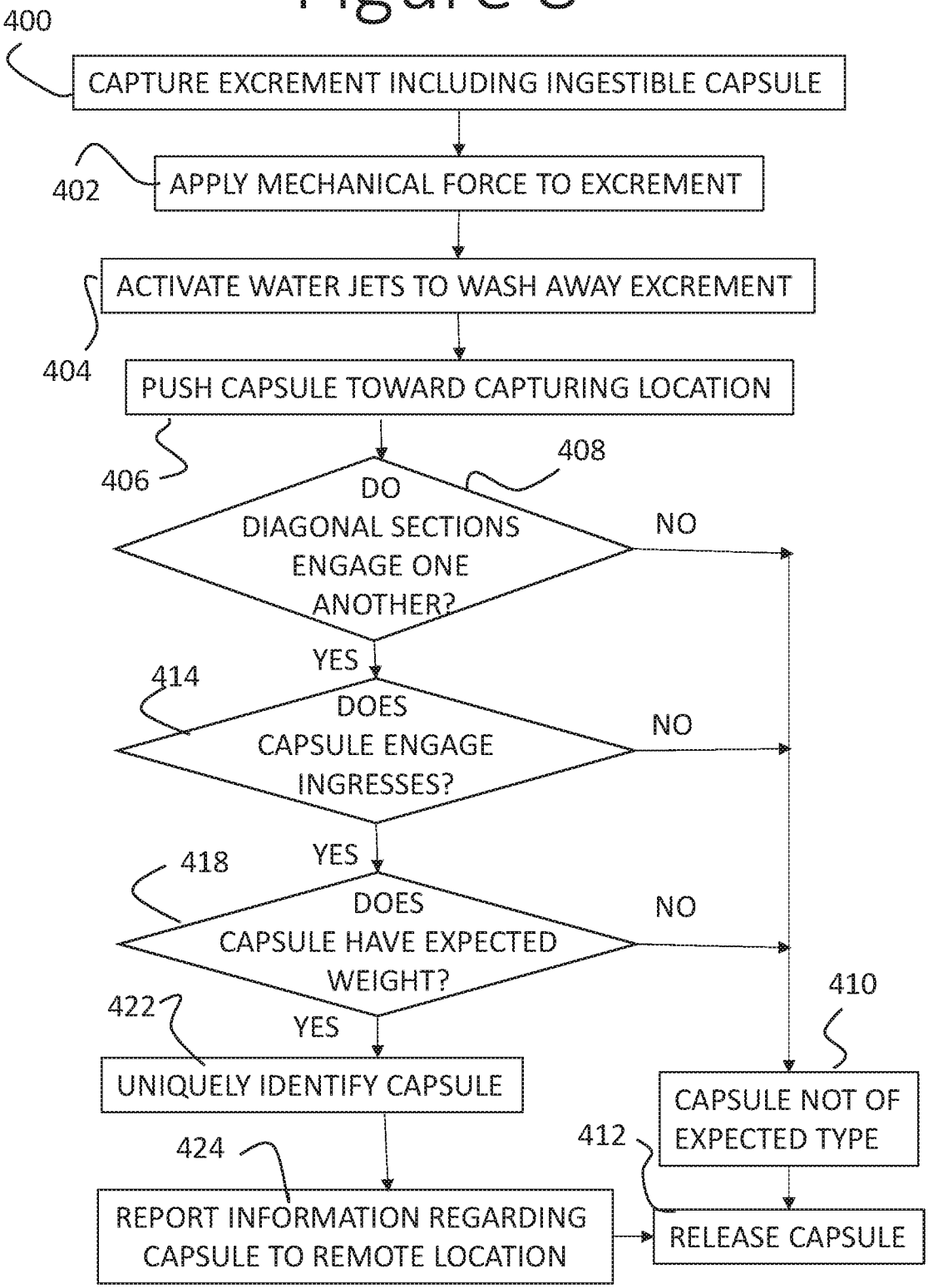
400
CAPTURE EXCREMENT INCLUDING INGESTIBLE CAPSULE
402
APPLY MECHANICAL FORCE TO EXCREMENT
ACTIVATE WATER JETS TO WASH AWAY EXCREMENT
404
PUSH CAPSULE TOWARD CAPTURING LOCATION
406
408
DO DIAGONAL SECTIONS ENGAGE ONE ANOTHER?
NO
YES
414
DOES CAPSULE ENGAGE INGRESSES?
NO
YES
418
DOES CAPSULE HAVE EXPECTED WEIGHT?
NO
YES
422
UNIQUELY IDENTIFY CAPSULE
410
CAPSULE NOT OF EXPECTED TYPE
412
424
REPORT INFORMATION REGARDING CAPSULE TO REMOTE LOCATION
RELEASE CAPSULE

INTERNATIONAL SEARCH REPORT

International application No.
PCT/IB2017/055565

A. CLASSIFICATION OF SUBJECT MATTER
IPC (2017.01) A61H 21/00, A61H 23/02, A61B 10/00

According to International Patent Classification (IPC) or to both national classification and IPC

B. FIELDS SEARCHED

Minimum documentation searched (classification system followed by classification symbols)
IPC (2017.01) A61H, A61B

Documentation searched other than minimum documentation to the extent that such documents are included in the fields searched

Electronic data base consulted during the international search (name of data base and, where practicable, search terms used)
Databases consulted: FamPat database, PatBase

C. DOCUMENTS CONSIDERED TO BE RELEVANT

Category*	Citation of document, with indication, where appropriate, of the relevant passages	Relevant to claim No.
A	US 2012/0101481 A1 (CAPSO VISION INC.) 26 Apr 2012 (2012/04/26) the whole document	1-21
A	US 2009/0326514 A1 (OLYMPUS CORPORATION) 31 Dec 2009 (2009/12/31) the wholw document	1-21
A	JP 2008022969 A (FUJIFILM CORP.) 07 Feb 2008 (2008/02/07) the whole document	1-21
A	WO 2013/121276 A1 (VIBRANT LTD) 22 Aug 2013 (2013/08/22) the whole document	22-26
A	CN 205459754 U (SHANGHAI HECHU MEDICAL TECH CO LTD) 17 Aug 2016 (2016/08/17) the whole document	22-26

☐ Further documents are listed in the continuation of Box C.

☒ See patent family annex.

* Special categories of cited documents:
"A" document defining the general state of the art which is not considered to be of particular relevance
"E" earlier application or patent but published on or after the international filing date
"L" document which may throw doubts on priority claim(s) or which is cited to establish the publication date of another citation or other special reason (as specified)
"O" document referring to an oral disclosure, use, exhibition or other means
"P" document published prior to the international filing date but later than the priority date claimed

"T" later document published after the international filing date or priority date and not in conflict with the application but cited to understand the principle or theory underlying the invention
"X" document of particular relevance; the claimed invention cannot be considered novel or cannot be considered to involve an inventive step when the document is taken alone
"Y" document of particular relevance; the claimed invention cannot be considered to involve an inventive step when the document is combined with one or more other such documents, such combination being obvious to a person skilled in the art
"&" document member of the same patent family

Date of the actual completion of the international search	Date of mailing of the international search report
09 Jan 2018	09 Jan 2018

Name and mailing address of the ISA:	Authorized officer
Israel Patent Office Technology Park, Bldg.5, Malcha, Jerusalem, 9695101, Israel Facsimile No. 972-2-5651616	SEGAL Liviu Telephone No. 972-2-5651782

INTERNATIONAL SEARCH REPORT
Information on patent family members

International application No.
PCT/IB2017/055565

Patent document cited search report	Publication date	Patent family member(s)	Publication Date
US 2012/0101481 A1	26 Apr 2012	US 2012101481 A1	26 Apr 2012
		US 2013168272 A1	04 Jul 2013
US 2009/0326514 A1	31 Dec 2009	US 2009326514 A1	31 Dec 2009
		AU 2003292802 A1	28 Sep 2004
		AU 2003292802 B2	24 Jan 2008
		CN 1756505 A	05 Apr 2006
		CN 1756505 B	09 May 2012
		EP 1600099 A1	30 Nov 2005
		EP 1600099 A4	23 Mar 2011
		EP 1600099 B1	04 Dec 2013
		JP 2004267350 A	30 Sep 2004
		JP 4012097 B2	21 Nov 2007
		KR 20050099546 A	13 Oct 2005
		KR 100781020 B1	29 Nov 2007
		US 2004175289 A1	09 Sep 2004
		WO 2004078036 A1	16 Sep 2004
JP 2008022969 A	07 Feb 2008	JP 2008022969 A	07 Feb 2008
WO 2013/121276 A1	22 Aug 2013	WO 2013121276 A1	22 Aug 2013
		AU 2014224165 A1	02 Oct 2014
		AU 2014224165 B2	19 Oct 2017
		CA 2864424 A1	22 Aug 2013
		CN 104244799 A	24 Dec 2014
		CN 104244799 B	13 Oct 2017
		EP 2814376 A1	24 Dec 2014
		GB 201202706 D0	04 Apr 2012
		IL 234083 D0	30 Sep 2014
		JP 2015512664 A	30 Apr 2015
		MX 2014009810 A	10 Feb 2015

INTERNATIONAL SEARCH REPORT
Information on patent family members

International application No.
PCT/IB2017/055565

Patent document cited search report	Publication date	Patent family member(s)	Publication Date
		US 2015073315 A1	12 Mar 2015
		US 9707150 B2	18 Jul 2017
		US 2017273863 A1	28 Sep 2017
CN 205459754 U	17 Aug 2016	CN 205459754 U	17 Aug 2016
		WO 2017129070 A1	03 Aug 2017

INTERNATIONAL SEARCH REPORT

International application No.

PCT/IB2017/055565

Box No. III Observations where unity of invention is lacking (Continuation of item 3 of first sheet)

This International Searching Authority found multiple inventions in this international application, as follows:

See extra sheet.

1. ☐ As all required additional search fees were timely paid by the applicant, this international search report covers all searchable claims.

2. ☒ As all searchable claims could be searched without effort justifying additional fees, this Authority did not invite payment of additional fees.

3. ☐ As only some of the required additional search fees were timely paid by the applicant, this international search report covers only those claims for which fees were paid, specifically claims Nos.:

4. ☐ No required additional search fees were timely paid by the applicant. Consequently, this international search report is restricted to the invention first mentioned in the claims; it is covered by claims Nos.:

Remark on Protest

☐ The additional search fees were accompanied by the applicant's protest and, where applicable, the payment of a protest fee.

☐ The additional search fees were accompanied by the applicant's protest but the applicable protest fee was not paid within the time limit specified in the invitation.

☐ No protest accompanied the payment of additional search fees.

International application No.
PCT/IB2017/055565

Box No. III Observations where unity of invention is lacking (Continuation of item 3 of first sheet):

* This International Searching Authority found multiple inventions in this international application, as follows:

Invention/s 1	a toilet-bowl mounted sensor and a method for measuring and identifying an ingestible capsule expelled into a toiled bowl.	Claim/s 1-21
Invention/s 2	a system for treatment of a disorder in a gastrointestinal (GI) tract of a subject.	Claim/s 22-26