No. 635,015. Patented Oct. 17, 1899.

J. B. HADAWAY.

STITCH SEPARATING AND INDENTING MACHINE.

(Application filed June 1, 1895.)

(No Model.) 3 Sheets—Sheet 1.

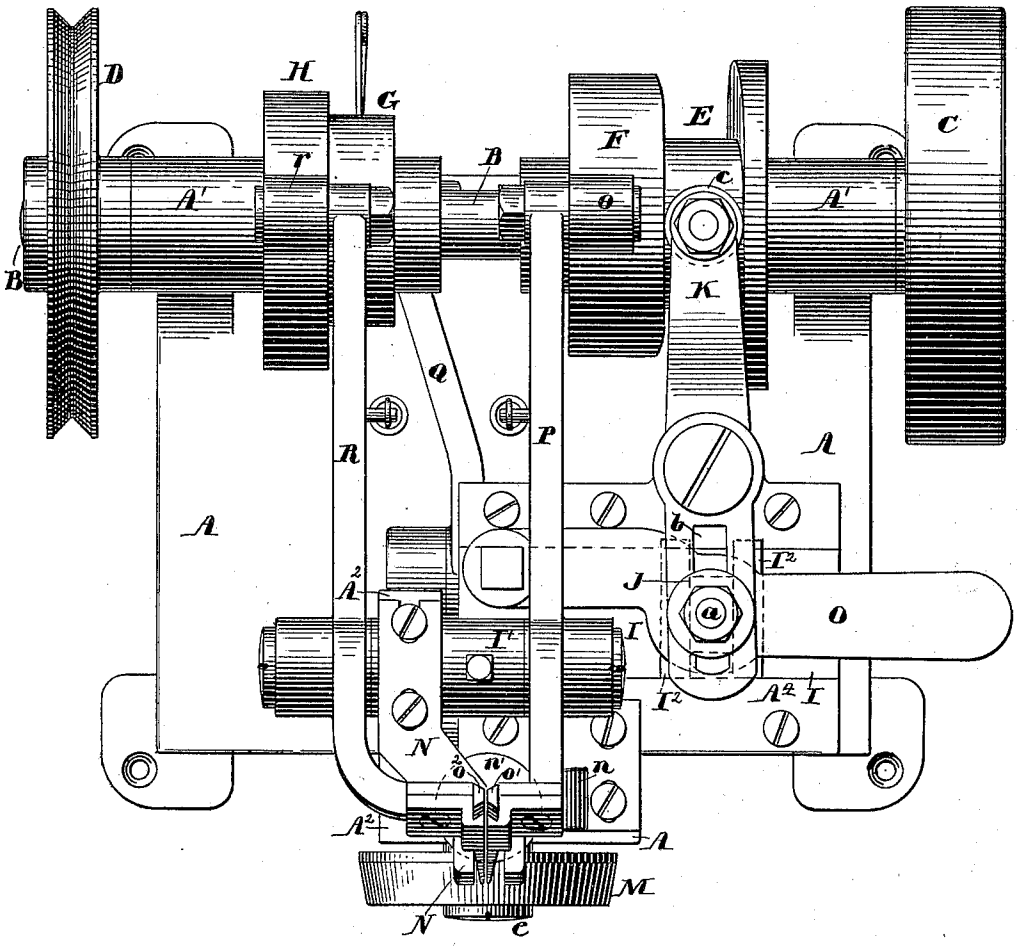

Fig. 1.

Witnesses:
Walter E. Lombard.
H. Meade Fletcher

Inventor:
John B. Hadaway,
by N. C. Lombard
Attorney.

THE NORRIS PETERS CO., PHOTO-LITHO., WASHINGTON, D. C.

No. 635,015. Patented Oct. 17, 1899.

J. B. HADAWAY.

STITCH SEPARATING AND INDENTING MACHINE.

(Application filed June 1, 1895.)

(No Model.) 3 Sheets—Sheet 2.

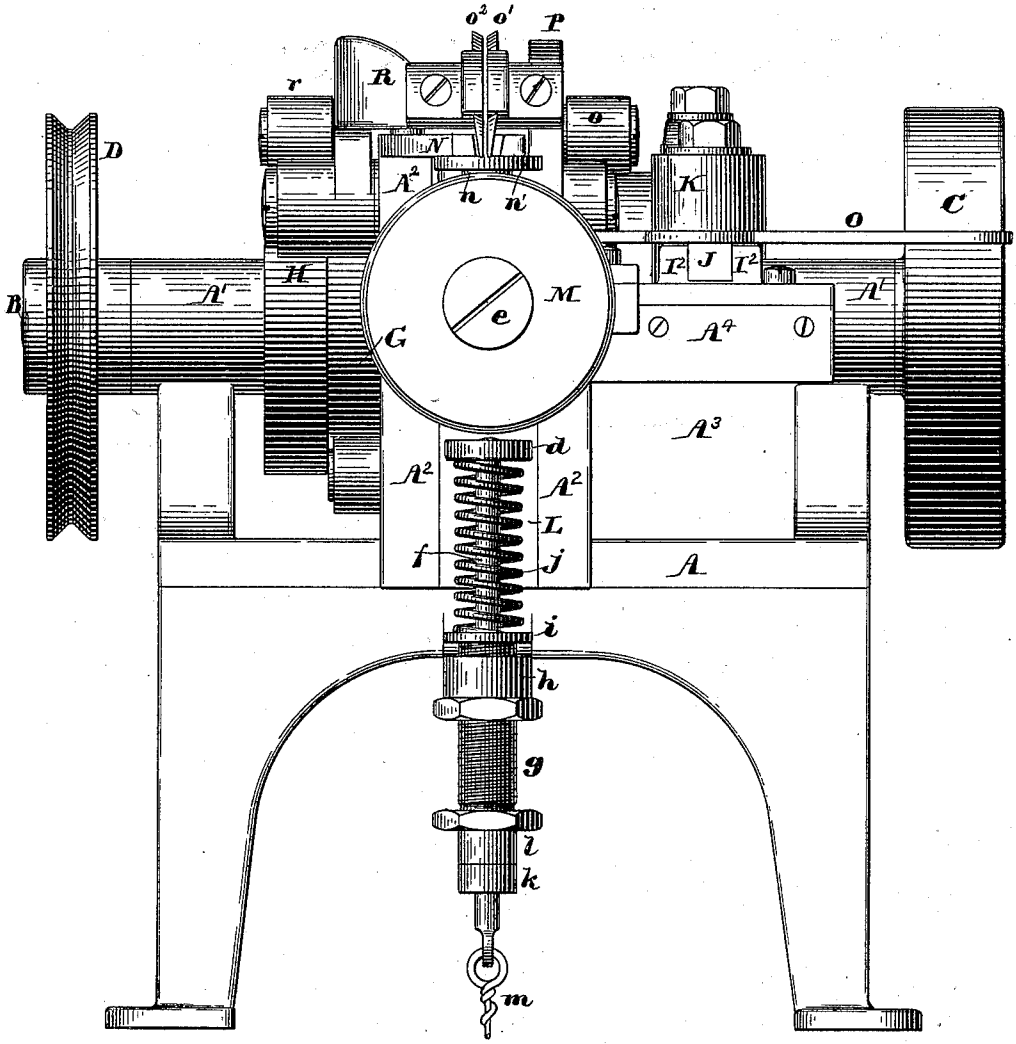

Fig. 2.

Witnesses:
Walter E. Lombard.
H. Theodora Fletcher

Inventor:
John B. Hadaway,
by N. G. Lombard
Attorney.

THE NORRIS PETERS CO., PHOTO-LITHO., WASHINGTON, D. C.

No. 635,015. Patented Oct. 17, 1899.

J. B. HADAWAY.

STITCH SEPARATING AND INDENTING MACHINE.

(Application filed June 1, 1895.)

(No Model.) 3 Sheets—Sheet 3.

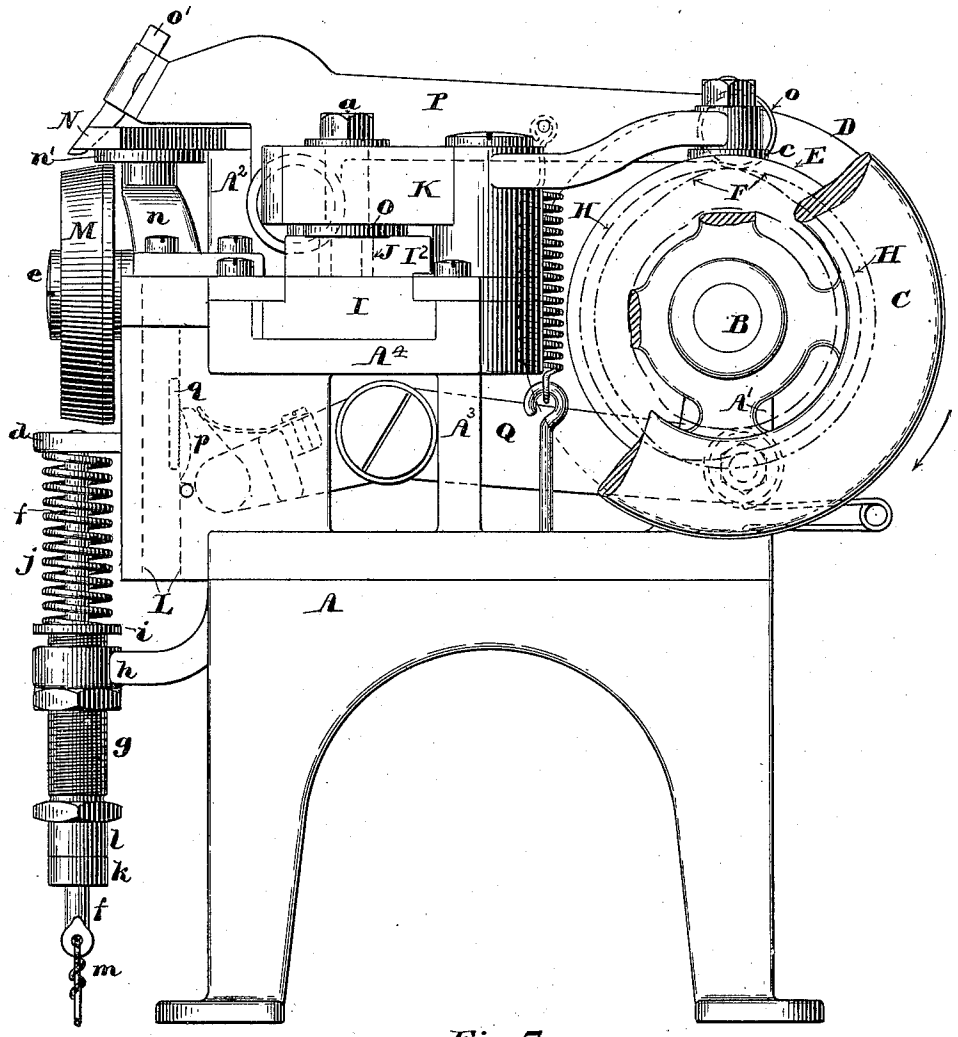

Fig. 3.

Witnesses:
Walter E. Lombard.
A. Theodore Fletcher.

Inventor:
John B. Hadaway,
by N. C. Lombard
Attorney.

THE NORRIS PETERS CO., PHOTO-LITHO., WASHINGTON, D. C.

UNITED STATES PATENT OFFICE.

JOHN B. HADAWAY, OF BROCKTON, MASSACHUSETTS.

STITCH SEPARATING AND INDENTING MACHINE.

SPECIFICATION forming part of Letters Patent No. 635,015, dated October 17, 1899.

Application filed June 1, 1895. Serial No. 551,342. (No model.)

To all whom it may concern:

Be it known that I, JOHN B. HADAWAY, of Brockton, in the county of Plymouth and State of Massachusetts, have invented certain new and useful Improvements in Stitch Separating and Indenting Machines, of which the following, taken in connection with the accompanying drawings, is a specification.

The present invention relates to improvements in machines of the above class; and it consists of certain improvements in the form and arrangement of the work-feeding and work-indenting mechanisms whereby the work-feed tool is also given a work-indenting movement to partially indent the work, the indentation of which is completed by the work-indenting tool.

The present invention further consists of improvements in the form and arrangement of the work feeding and indenting tools whereby they are advanced toward and retracted from the work along a path oblique to the surface of the work in such manner that they can be projected between the welt and upper without liability of injuring the upper.

The present invention further consists of a certain novel arrangement of mechanism whereby the indenting-tool remains in the work and coöperates with the work-support to hold the work from motion while the feed-tool is retracted to engage the next stitch.

The present invention further consists of a novel arrangement of the work-support, feed-tool, and associated mechanisms whereby the feed-tool is made to slightly indent the work at or near the point at which it first comes in contact therewith and by means of such indentation to feed the work to the indenting-tool.

The feature last suggested is of great importance in the art in that it enables the machine to operate successfully either on stitched surfaces to separate the stitches or upon unstitched surfaces to form an "embossed" or imitation stitch.

The present invention is illustrated in the accompanying drawings, in which—

Figure 1 is a plan view of a machine embodying the same. Fig. 2 is a front elevation, and Fig. 3 is a side elevation.

Similar letters of reference refer to similar parts throughout the several views.

Referring to the drawings, A represents a frame suitable to support the working parts and upon which in suitable bearings A′ A′ is mounted the shaft B, which carries at one end the hand-wheel C and at the opposite end the driving-wheel D.

E, F, G, and H represent a series of cams for actuating the parts hereinafter described, which are mounted upon and rotate with the shaft B.

The frame A has formed thereon the upwardly-projecting blocks A^2 and A^3, connected at their upper ends by the plate A^4, in which is formed a guideway to which is fitted the slide I, provided with the upwardly-projecting boss I′ and two upwardly-projecting lips I^2, extending transversely along the slide I and parallel with each other, forming a transverse groove, in which is fitted a rectangular block J, mounted upon the lever O by means of a bolt *a*, which extends through the lever O and is adjustably secured in the slot *b*, formed in the feed-lever K, said lever K carrying at its rear end a truck *c*, which works in the path of the cam E to reciprocate the slide I to feed the work. The front of the block A^2 has formed therein a vertical guideway, to which is fitted the slide L, which is provided with the outwardly-projecting ear *d* and has set in its upper end a stud *e*, upon which is mounted the work-support M, so as to be revoluble thereon. The ear *d* has secured therein the pendent rod *f*, which extends through the sleeve *g*, which is fitted to a bearing in the stud *h*, projecting from the side of the frame. The rod *f* is surrounded between the collar *i*, resting on the upper end of the sleeve *g*, and the ear *d* by the spring *j*, the tension of which tends to move the slide L and the work-support M, carried thereby, upward. The rod *f* has adjustably secured thereon, near its lower end, the collar *k*, between which and the lower end of the sleeve *g* is fitted an elastic cushion *l*, and said rod is connected by the wire *m* or other suitable means to a treadle (not shown) mounted upon the floor of the room or any suitable support. A stud *n* is mounted upon the upper side of the block A^2 and carries at its upper end the gage *n*′, just above which is the upper work-support N, secured to the higher portion of the block A^2.

O is a hand-lever for adjusting the block J transversely of the slide L.

The mechanism hereinbefore described, except as hereinafter specified, may be and conveniently is substantially the same as described in the Letters Patent No. 537,823, issued to me April 23, 1895, and the same forms no part of the present invention.

To the boss on ear I′ of the feed-slide I is pivoted the feed-tool lever P, carrying at its rear end the truck *o*, which is acted upon by the face-cam F to vibrate said lever, and the front end of said lever has secured directly thereto the feed-tool *o′*, the lower end of which enters the space between two stitches when the front end of the lever P is depressed and indents the welt. When this indenting is being done, the work is clamped between the upper and lower work-supports by the upward pressure of the spring *j*, and while the tool *o′* is pressed between the two stitches the slide I, with the lever P and tool *o′*, is moved toward the left of Figs. 1 and 2 to feed the material, the above-described arrangement being such that the tool *o′* has both work-feeding and work-indenting movements.

The lower work-support M may be and conveniently is locked in its raised position by means of the lever Q, pawl *p*, and ratchet *q*, operated by the cam G, substantially as in my before-cited Letters Patent, or said locking-lever may be dispensed with, if desired, by increasing the tension of the spring *j*.

R is a second tool-carrying lever substantially like the lever P, except that its front end is offset toward the right to a somewhat greater distance than the lever P is offset toward the left and carries at its rear end the truck *r*, which is acted upon by the cam H to vibrate said lever and has secured directly to its front end the indenting-tool O^2, which, as shown, is substantially like the tool O′. It will be noted that both of the tools O′ and O^2 are mounted upon their respective levers P and R so as to be oblique to the plane of the surface of the work and are moved by said levers along a path oblique to said plane, the advantage gained by the last-described feature being that the tools are enabled to pass under the upper into the crease and to form an indentation, if required, extending across the welt.

The operation of my invention is as follows: The several parts of the machine being in the positions shown in the drawings, the operator first turns the hand-wheel in the direction opposite to that indicated by the arrows on Fig. 3 a distance equal to about sixty-five degrees, when the pawls *p* will have been withdrawn from engagement with the ratchet *q* to unlock the lower work-support. The operator then places his foot upon the treadle and depresses the lower work-support against the tension of the spring *j* a sufficient distance to permit the insertion of the sole edge between said lever work-support and the points of the tools O′ and O^2 and the upper work-support or table N. The operator then turns the hand-wheel in the direction indicated by the arrow a distance equal to one hundred and five degrees, when the feed-tool O′ will have been raised to its extreme height above the work. He then takes the shoe in his left hand, with the heel toward the left, and places the welt at a point just forward of the shank in position for the point of the indenting-tool O^2 to enter the space between two stitches, with the vamp resting against the end of the upper work-support or table and the edge of the sole against the gage *n′*, which has previously been adjusted to a position to bring the stitches to be operated upon just beneath the point of the tools O′ and O^2. The operator now releases the lower work-support by removing his foot from his treadle and then sets the cam-shaft in motion. The first effect produced by the revolution of the shaft is the moving of the feed-tool O′ to the right a distance equal to the standard length of a stitch for the particular job in hand, which length has previously been determined and the movement of the feed-slide adjusted by the hand-lever O. The feed-tool O′ now descends into the space between the two stitches at a distance from the indenting-tool O^2 (toward the right) equal to the length of two standard stitches and forms a partial indentation in said space, which it engages to feed the work. The separator O^2 is now raised out of the work to its extreme height, the lower work-support is released by the depression of the pawls *p*, carried by the lock-lever, and the feed-slide is moved to the left a distance equal to the length of a stitch, carrying therewith the lever P and tool O′ and feeding the work an equal distance. The work-support is now locked against any downward movement, and the tool O^2 descends into the space between the stitches next in advance of that occupied by the tool O′ and completes the indentation of the welt. The tool O′ is now raised out of the work to the position at starting, when a revolution of the shaft is completed.

It will be evident to one skilled in the art from the foregoing description of my invention that since the indenting-tool remains in the work while the feed-tool is retracted to engage the next stitch and coöperates with the work-table to hold the work a machine may be constructed with a rigidly-supported work-table and without the additional clamping means for holding work hereinbefore described, and I desire to say that I consider such machine clearly within the scope of the present invention. I would further say that in a machine involving other clamping means for holding the work I consider the last-suggested feature of importance as preventing any liability of the work slipping while held by said clamping means.

I therefore claim as novel and desire to secure by Letters Patent of the United States—

1. In a machine for forming indented surfaces, the combination of an indenting feed-

tool, an indenting-tool, and connected mechanisms operating to actuate the feed-tool to indent and feed the work, and to force the indenting-tool into the indentation formed by the feed-tool, substantially as described.

2. In a machine for forming indented surfaces the combination of two separate tools for forming the indentations, one of said tools being arranged to form a partial indentation in the work and the other to enter and complete said indentation, and means for actuating said tools, substantially as described.

3. In a machine for indenting stitched surfaces, a feed-tool and an indenting-tool both inclined to the surface of the work, and means for advancing and retracting said tools along a path oblique to the surface of the work, substantially as described.

4. In a machine for indenting stitched surfaces, the combination with a feed-tool and an indenting-tool both inclined to the surface of the work and both arranged to operate on the same side of the work, of means for advancing and retracting said tools along paths oblique to the surface of the work, substantially as described.

5. In a machine for indenting stitched surfaces the combination of a work-support, a feed-tool arranged to feed the work to the indenting-tool, said indenting-tool, and mechanism for actuating said tools, having provision for holding the indenting-tool in engagement with the work, with a positive unyielding pressure, while the feed-tool is retracted to engage the next stitch, substantially as described.

6. In a machine for indenting stitched surfaces, the combination of a work-support, a work-indenting feed-tool, an auxiliary work-indenting tool, mechanism for moving the auxiliary tool toward and from the work-support, mechanism for moving the feed-tool toward and from the work-support, and toward and from the auxiliary tool, and means for varying the extent of movement of the feed-tool away from the auxiliary tool, as set forth, substantially as described.

7. In a machine for indenting stitched surfaces, the combination of a work-support, a work-indenting feed-tool, an auxiliary work-indenting tool, mechanism for moving the latter toward and away from the work-support, a lever carrying said feed-tool, a support for said lever which is movable to give the tool lateral motions, means for oscillating said lever, to move the feed-tool toward and from the work-support, and mechanism for moving said support to move the feed-tool laterally toward and from the auxiliary tool, substantially as described.

In testimony whereof I have signed my name to this specification, in the presence of two subscribing witnesses, on this 31st day of May, A. D. 1895.

JOHN B. HADAWAY.

Witnesses:
N. C. LOMBARD,
WALTER E. LOMBARD.