United States Patent [19]

Sick

[11] **3,854,687**

[45] **Dec. 17, 1974**

[54] **MOUNTING FOR OPTICAL DEVICE**

[75] Inventor: **Erwin Sick,** Stifterweg Icking, Germany

[73] Assignee: **Erwin Sick Optik-Elektronik,** Waldkirch, Germany

[22] Filed: **July 16, 1973**

[21] Appl. No.: **379,207**

[30] **Foreign Application Priority Data**

Aug. 28, 1972 Germany 2242266

[52] **U.S. Cl.** ..... **248/276,** 248/316 R, 403/137

[51] **Int. Cl.** **F16c 11/06,** F16l 27/00

[58] **Field of Search** 248/316, 276, 278, 181, 248/179, 178; 350/257, 255; 403/132, 137, 142, 130

[56] **References Cited**

UNITED STATES PATENTS

260,473	7/1882	Gardam	248/181 X
1,375,905	4/1921	Green	403/137
1,963,927	6/1934	Twyman	403/137 X
2,464,500	3/1949	Graham	248/181
2,912,838	11/1959	Zeller	403/142 X
3,731,957	5/1973	Uchida	403/130

FOREIGN PATENTS OR APPLICATIONS

838,752	3/1939	France	403/142
15,742	0/1905	Great Britain	248/181

Primary Examiner—J. Franklin Foss

[57] **ABSTRACT**

Mounting for an optical device to be precisely adjusted on a fixed frame, such as an optical needle-checking device in circular knitting machines comprising a spherical joint which permits movement in all directions as well as distance adjustment and rotation around the axis of the optical device, said joint having a ball connected with the optical device which is mounted lockably and unlockably on a fixed support.

5 Claims, 2 Drawing Figures

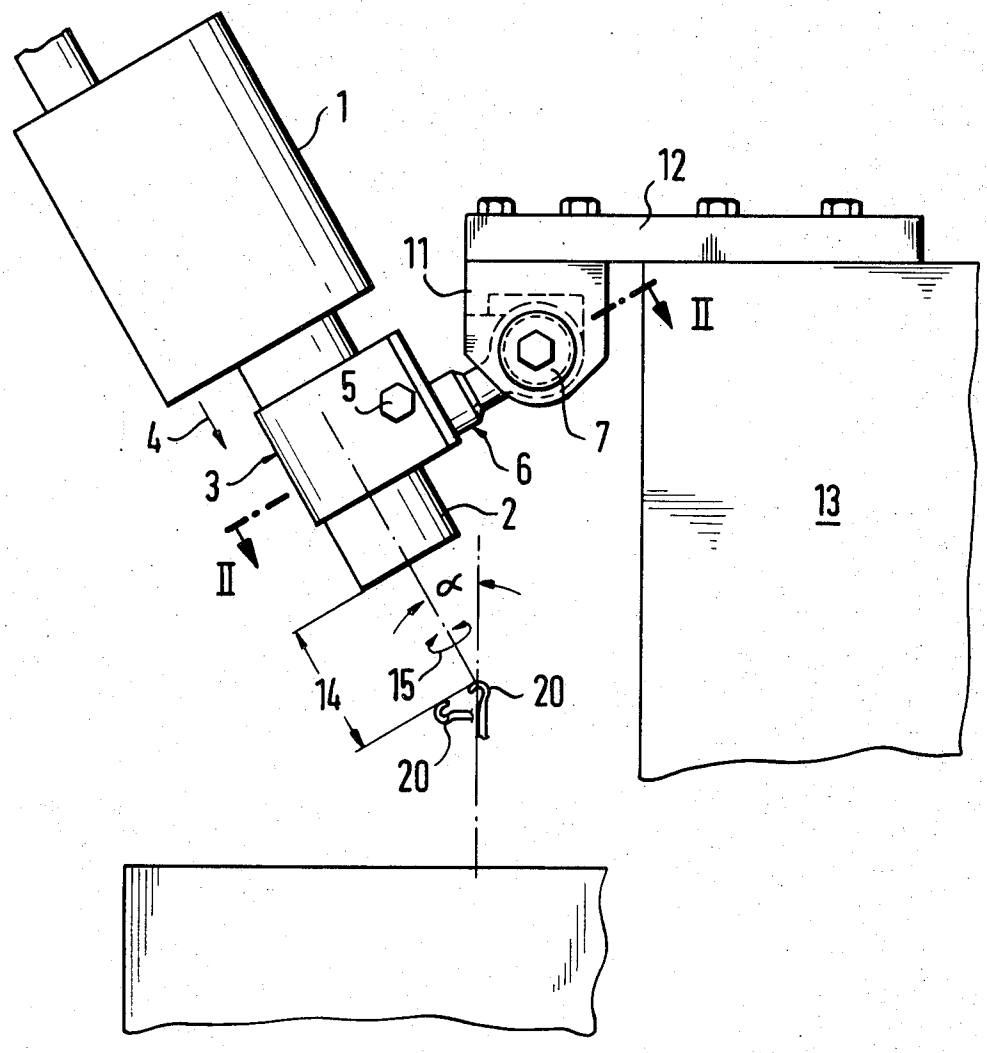

Fig.1

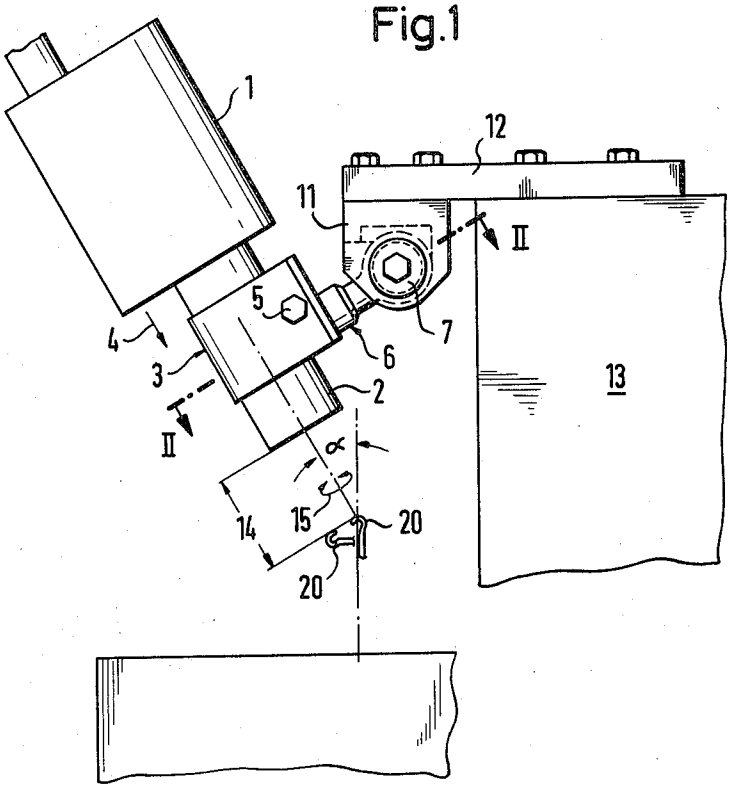

Fig.2

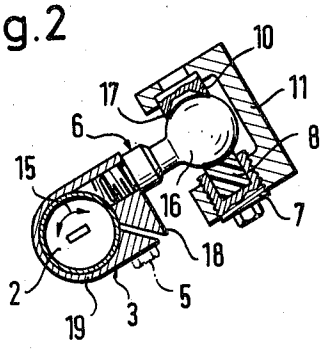

MOUNTING FOR OPTICAL DEVICE

FIELD OF THE INVENTION

The present invention relates to a mounting for an optical device to be precisely adjusted on a fixed frame, and more specifically to an optical needle-checking device in circular knitting machines, said device permitting movement in all directions as well as distance adjustment and rotation around the optical instrument's axis by means of a spherical joint.

BACKGROUND OF THE INVENTION

For trouble-free operation of optical apparatus and more specifically of a needle-checking device in circular knitting machines it is necessary to mount the optical device on a support (for example, a circular knitting machine) at a suitable angle and distance from the object aimed at (for example, the needle-head). Mounting is difficult because generally there is little available space, and attaching the mounting on the machine must be relative to the respective machine type, in various different places and arrangements. Also, a sensitive adjustment of the needle-checking device must be possible; and once adjustment has been made on a given setting, the setting must not be changed.

SUMMARY OF THE INVENTION

The object of the present invention consists in providing an attachment of the above-named type in which, after precise adjustment has been achieved, the setting can be relied upon without having to fear a displacement from the optimal adjustment as determined.

For the solution of this problem the present invention provides that the ball connected with the optical device is mounted lockably and unlockably on a fixed support. Thus, in contrast to known embodiments, the ball is mounted in a support which is fixedly connected with the machine and not with the device. Clamping-adjustment forces which arise upon the clamping of the ball are therefore absorbed by the machine and cannot lead to a displacement of the determined adjustment.

A preferred embodiment provides that the support is a hardened ball-socket which supports the ball in a circular ring, in which two diametrically opposite portions of the circular ring (being diametrically opposite with respect to the center of the ball) have an angular distance of about 90°. From the side opposite the support a pressure plate (formed of a material substantially softer than the support itself) presses against the ball. The pressure plate is most advantageously made of plastic. In accordance with the present invention, said pressure plate presses centrally on the ball in such a way that despite the greater friction between plastic and metal ball because of the centralized pressure, the friction between pressure plate and ball is less than that between ball and socket. In this manner, not only is it possible to avoid turning of the ball upon locking the pressure plate or loosening the setscrew during adjustment or locking (through movement of the ball on the axis of the setscrew), but compression can occur only on the pressure plate side and not on the adjustment side of the adjustment-providing support.

An especially desirable practical embodiment provides that the pressure plate and the support are arranged at opposite sides of a U-shaped housing which

may be fixed to the frame. The ball is most advantageously rigidly connected with a clamp which surrounds a tube coaxial to the device. The clamp most effectively exhibits a massive base connected with the ball and a bracket-like part which by means of a screw (clamping the tube) may be braced against the massive base. Also, this arrangement contributes to the impossibility of displacement during locking, once adjustment has been achieved.

BRIEF DESCRIPTION OF THE DRAWING

The present invention will be described by the example illustrated in the following drawing, in which:

FIG. 1 is a schematic representation of a mounting in accordance with the present invention, by means of which a needle-checking device is mounted on a schematically indicated circular knitting machine; and

FIG. 2 is a section along line II—II of FIG. 1.

DETAILED DESCRIPTION OF PREFERRED EMBODIMENT

Schematically indicated needle-checking device **1** has a tube **2** which has the optical focusing lenses, said tube being arranged in a split clamp **3** provided with a massive base **18** and a bracket-like part **19.** By means of a clamping screw **5,** the clamp may be clamped against tube **2** in such a way that this is held without rotational or axial displacement.

When clamping screw **5** is loosened, needle-checker **1** may be moved back and forth as desired in the direction of arrow **4.** In this manner, distance **14** between the end of the tube **2** and the schematically indicated needle-heads **20** may be adjusted with precision. Furthermore, needle-checking device **1** may be turned together with tube **2** in the direction of arrow **15** in FIG. **2,** and in this manner the oblong light spot projected from the device onto needle-heads **20** may be aligned with precision on the longitudinal direction of the needles.

In fixed connection with clamp **3** is needle-head **6,** which is provided with a hardened ball **16.** In accordance with the present invention, ball **16** is produced by machining, so that it has an exactly spherical shape. On one side, ball **16** rests in a socket **10** which is formed by a circular ring-shaped support **17** with an aperture angle of about 90° relative to the center of the ball. Socket **10** is secured (for example through hard-soldering) to one inside end of a U-shaped housing **11.** Said housing is made large enough so that ball **16** may be readily moved in all directions inside of it.

Housing **11** is connected with the supporting circular knitting machine by means of a steel bar **12** which is at one end secured to housing **11** and at the other to segment **13** of the circular knitting machine. Advantageously, there is provided on three sides of housing **11** mounting-holes, so as to permit multisided set-screwing for a variety of different types of machine.

A plastic pressure plate **8** is provided at the end of housing **11,** lying against socket **10.** Said pressure plate is pressed centrally against the ball **16** by a setscrew **7.** The pressure plate may advantageously consist of 6.6-polyamid. Through loosening or tightening setscrew **7,** the ball **16** may be made movable or secured within its support.

The head sizes of screwheads **5** and **7** are identical so as to permit servicing with the same wrench.

The operation of the above-described mounting is as follows:

Once the mounting has been secured to the circular knitting machine, both clamping screws are slightly tightened in such a way that the mobility of all parts remains assured. Then, in accordance with the present invention, the adjustment angle relative to the needle-head is adjusted at about 30°. Finally, adjustment of distance **14** and of the light spot on needle-heads **20** is achieved by turning in the direction of arrow **15.** As soon as optimal adjustment has been performed, both clamping screws (first screw **7,** then screw **5**) are completely tightened. Then, because of the inventive improvement, there will be no further displacement of the desired adjustment.

While the above described embodiment constitutes the presently preferred mode of practicing the invention, other embodiments or equivalents are within the scope of the actual invention, which is claimed as:

1. Mounting for an optical device to be precisely adjusted on a fixed frame, in particular for an optical needle-checking device in circular knitting machines, comprising a spherical joint permitting movement in all directions as well as distance adjustment and rotation around the axis of said optical device, said joint having a ball connected with said optical device which is lockably and unlockably mounted on a fixed support having a hard socket supporting said ball on a circular ring comprised of two parts diametrically opposite with respect to the center of the ball having an angular distance of approximately 90°, and there being provided a pressure plate which is substantially softer than said support pressing against said ball from the side opposite the support.

2. Mounting in accordance with claim **1,** wherein said pressure plate consists of plastic material.

3. Mounting in accordance with claim **1,** wherein said pressure plate and said support are arranged at opposite sides of a U-shaped housing which is fixedly mountable on a frame.

4. Mounting in accordance with claim **1,** wherein said ball is rigidly connected with a clamp which surrounds a tube coaxial with said device.

5. Mounting in accordance with claim **4,** wherein said clamp has a massive base and a bracket-like part connected with said ball, said bracket-like part being clamped against said massive base by means of a clamping screw to rigidly clamp said tube.

* * * * *