(12) INTERNATIONAL APPLICATION PUBLISHED UNDER THE PATENT COOPERATION TREATY (PCT)

(19) World Intellectual Property Organization
International Bureau

(43) International Publication Date
23 February 2012 (23.02.2012)

PCT

(10) International Publication Number
WO 2012/024099 A1

(51) International Patent Classification:
B01D 63/16 (2006.01) *C02F 1/44* (2006.01)
B01D 63/08 (2006.01) *E21B 43/34* (2006.01)
C02F 1/38 (2006.01)

(21) International Application Number:
PCT/US2011/046884

(22) International Filing Date:
8 August 2011 (08.08.2011)

(25) Filing Language: English

(26) Publication Language: English

(30) Priority Data:
61/373,991 16 August 2010 (16.08.2010) US

(71) Applicant *(for all designated States except US)*: **BOARD OF TRUSTEES OF MICHIGAN STATE UNIVERSITY** [US/US]; 246 Administration Building, East Lansing, Michigan 48824 (US).

(72) Inventors; and

(75) Inventors/Applicants *(for US only)*: **TARABARA, Volodymyr** [UA/US]; 2562 Heather Circle, East Lansing, Michigan 48823 (US). **SHAN, Wenqian** [CN/US]; 4941 Allison Parkway, Vacaville, California 95688 (US).

(74) Agents: **FALCOFF, Monte L.** et al.; Harness, Dickey & Pierce, P.L.C., P.O. Box 828, Bloomfield Hills, Michigan 48303 (US).

(81) Designated States *(unless otherwise indicated, for every kind of national protection available)*: AE, AG, AL, AM, AO, AT, AU, AZ, BA, BB, BG, BH, BR, BW, BY, BZ, CA, CH, CL, CN, CO, CR, CU, CZ, DE, DK, DM, DO, DZ, EC, EE, EG, ES, FI, GB, GD, GE, GH, GM, GT, HN, HR, HU, ID, IL, IN, IS, JP, KE, KG, KM, KN, KP, KR, KZ, LA, LC, LK, LR, LS, LT, LU, LY, MA, MD, ME, MG, MK, MN, MW, MX, MY, MZ, NA, NG, NI, NO, NZ, OM, PE, PG, PH, PL, PT, QA, RO, RS, RU, SC, SD, SE, SG, SK, SL, SM, ST, SV, SY, TH, TJ, TM, TN, TR, TT, TZ, UA, UG, US, UZ, VC, VN, ZA, ZM, ZW.

[Continued on next page]

(54) Title: WATER AND OIL SEPARATION SYSTEM

(57) Abstract: A separation system includes at least a hydrocyclone and one or more membranes. In another aspect, a separation system includes a membrane having graduated and/or asymmetrical pore sizes. A further aspect of a separation system includes an inner membrane, an outer membrane and a hydrocyclonic flow between the membranes.

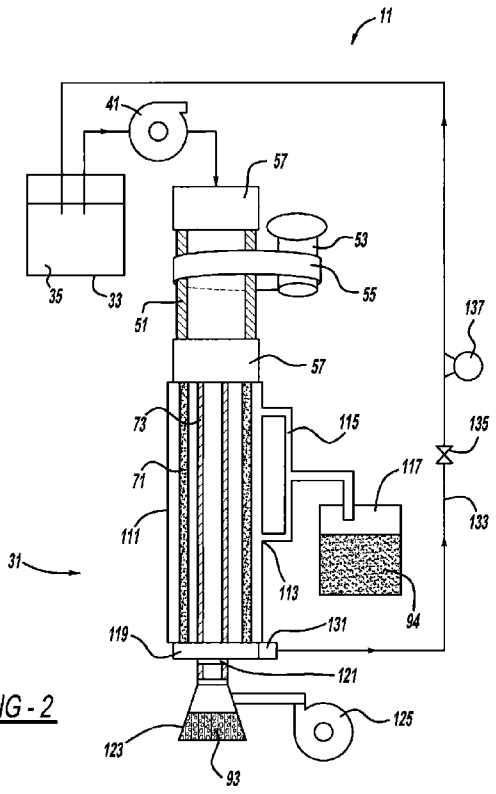

FIG - 2

WO 2012/024099 A1

(84) Designated States *(unless otherwise indicated, for every kind of regional protection available)*: ARIPO (BW, GH, GM, KE, LR, LS, MW, MZ, NA, SD, SL, SZ, TZ, UG, ZM, ZW), Eurasian (AM, AZ, BY, KG, KZ, MD, RU, TJ, TM), European (AL, AT, BE, BG, CH, CY, CZ, DE, DK, EE, ES, FI, FR, GB, GR, HR, HU, IE, IS, IT, LT, LU, LV, MC, MK, MT, NL, NO, PL, PT, RO, RS, SE, SI, SK, SM, TR), OAPI (BF, BJ, CF, CG, CI, CM, GA, GN, GQ, GW, ML, MR, NE, SN, TD, TG).

Declarations under Rule 4.17:

— *as to applicant's entitlement to apply for and be granted a patent (Rule 4.17(ii))*

— *as to the applicant's entitlement to claim the priority of the earlier application (Rule 4.17(iii))*

— *of inventorship (Rule 4.17(iv))*

Published:

— *with international search report (Art. 21(3))*

WATER AND OIL SEPARATION SYSTEM

STATEMENT OF GOVERNMENT RIGHTS

[0001] A portion of this invention was made with U.S. government support under grant OISE-0530174 from the National Science Foundation. The U.S. government may have certain rights in this invention.

CROSS-REFERENCE TO RELATED APPLICATION

[0002] This application claims the benefit of U.S. Provisional Application Serial No. 61/373,991, filed on August 16, 2010, which is incorporated by reference herein.

BACKGROUND AND SUMMARY

[0003] The present disclosure relates generally to liquid-liquid separation and more particularly to an oil and water separation system using a membrane.

[0004] Separation of oil from water has been a longstanding concern. Various devices have been tried but often with mediocre results. Hydrocyclones are generally known but none which circulate the oil/water mixture between membranes or which utilize various advantageous membrane characteristics. Exemplary conventional devices are disclosed in the following: U.S. Patent No. 7,569,671 entitled "Method and System for Corn Fractionation" which issued to Cheryan on August 4, 2009; U.S. Patent No. 6,210,575 entitled "Crossflow Filter Cyclone Apparatus" which issued to Chase et al on April 3, 2001; and U.S. Patent Publication No. 2002/0189807 entitled "Method and System for Oil and Water Separation Utilizing a Hydrostatic Pressure Head for Disposal of Water;" all of which are incorporated by reference herein.

[0005] In accordance with the present invention, a separation system includes at least a hydrocyclone and one or more membranes. In another aspect, a separation system includes one or more asymmetric membranes (i.e. membranes with a spatial gradient of pore size). A further aspect of a separation

system includes an inner membrane, an outer membrane and a hydrocyclonic flow of the feed between the membranes. In yet another aspect of a separation system, separated oil and/or hydrocarbon is removed from adjacent a bottom or tail end of a lumen of a porous hollow fiber or a ceramic membrane. A method of separating oil from water in a mixture is also provided.

[0006] The present separation system is advantageous over conventional devices in that the present system is expected to more efficiently and completely perform separation, reduce fouling, and be more cost effective in use. The present system advantageously benefits from a synergistic combination of a hydrocyclone with multiple membranes and/or specific membrane characteristics to simultaneously separate oil-in-water dispersions into oil and water phases. Additional advantages and features of the present invention will become apparent from the following description and appended claims, taken in conjunction with the accompanying drawings.

BRIEF DESCRIPTION OF THE DRAWINGS

[0007] Figure 1 is a perspective and partially diagrammatic view showing a production embodiment of the present separation system;

[0008] Figure 2 is a diagrammatic view showing the production embodiment of the present separation system;

[0009] Figure 3 is a diagrammatic perspective view showing the production embodiment of the present separation system;

[0010] Figure 4 is a cross-sectional view, taken along line 4-4 of Figure 3, showing the production embodiment of the present separation system;

[0011] Figure 5 is an exaggerated sectional view, taken along line 5-5 of Figure 4, showing the production embodiment of the present separation system;

[0012] Figure 6 is an enlarged sectional view, taken along line 5-5 of Figure 4, showing the production embodiment of the present separation system; and

[0013] Figure 7 is a diagrammatic view showing a laboratory embodiment of the present separation system.

DETAILED DESCRIPTION

[0014] A water and oil separation and purification system 11 preferably includes two tubular, concentrical membranes with opposite affinities to water (one hydrophilic and another hydrophobic or superhydrophobic) and a hydrocyclonic flow between the membranes. In the application shown in Figure 1, separation system 11 is fed an oil and water mixture by way of a feed pipe 13 connected to a storage tank 15. A boiler 17 creates steam which is injected underground through an insulated tube 19 to loosen up tar sands or other heavy hydrocarbon or oil deposits 21. The steam/water and oil mixture are then pumped up the same or a different tube 23 by an oil well pump 25 and transported to storage tank 15. In another application, separation system 11 is mounted to a watercraft (not shown) such as a boat equipped with oil skimmers, off-shore oil platform, or other flotation device, which includes an inlet for receiving an oil-and-water mixture resulted from an oil spill into sea water or generated during oil production; the system also includes a storage tank and pipe for feeding the separation system. For both of these end uses, a course screen-type filter may be desired to remove sand and other suspended solid particles prior to entry of the liquid mixture to the present separation system.

[0015] The arrangement of Figure 1 shows six parallel and vertically elongated separation columns 31 which are all fed by pipe 13 in a generally simultaneous and parallel processing manner. A greater or lower number of separation columns 31 can be employed depending upon the volume of the fed mixture, the quality of the purified constituents desired and the flow speed desired. Alternatively, an array of smaller (down to 10 mm in diameter and approximately 25 mm in length) separation columns can be mounted in a generally horizontal configuration outwardly radiating from a support tower (not shown).

[0016] Figures 2 through 5 illustrate a preferred production configuration for the present separation system 11. A feed tank 33 holds a mixture 35 of a hydrocarbon, such as oil, and water. A Moyno® pump 41 feeds

the mixture from the feed tank to an inlet of a leading end of separation column 31.

[0017] Mixture 35 is initially fed into a fluid rotation-inducing cylinder 51 which is rotated by an electric motor 53 and an inter-connecting belt drive transmission 55. Alternatively, a reducing gear, sprocket and chain, or other mechanical or electromagnetic transmission can be employed to rotate cylinder 51. Cylinder 51 is a hollow metal tube, of a cylindrical shape, which is journaled within a stationary housing or support frame (not shown) by way of two bearing and swivel assemblies 57. Seals and an end cap are provided. The inside surface of cylinder 51 may be provided with a coarse texture, splines, vanes, or other pattern to impart a hydrocyclonic and rotational swirling motion to the mixture in and downstream of the cylinder. Alternatively, a rotational impeller can be used within the fluid path instead of the cylinder to provide a diagonal or other off-axis feeding of the mixture into separation column 31 in order to cause the hydrocyclone movement of mixture 35 therein. Alternatively, swirling motion can be imparted to the feed by introducing it through an inlet located under an angle with respect to the centerline axis 75 of the separation column 31.

[0018] Separation column 31 further includes an outer membrane 71 and a concentric inner membrane 73, both of which are coaxial with a centerline axis 75 of separation column 31. Furthermore, a set of brackets may retain ends of the rigid membranes within a housing. Inner membrane 73 is either a porous hollow fiber membrane or a ceramic membrane or a metallic membrane, with an exterior surface 83 thereof coated with hydrophobic (e.g., PTFE (Teflon) or PVDF (polyvinylidene fluoride)) or superhydrophobic layer 77. Outer membrane is a hydrophilic ceramic (e.g., TiO_2, SiO_2/Al_2O_3) membrane, which can be coated with a layer 79 of different ceramic material (e.g., Fe_2O_3) on an interior surface 101. The ceramic material is made by sintering and compression of its constituent materials. An exemplary ceramic membrane construction is disclosed in U.S. Patent No. 5,266,207 entitled “Composite Nanofiltration Membrane” which issued to Boye et al. on November 30, 1993, and is incorporated by reference herein.

[0019] Referring to Figures 4 – 6, when made of ceramic material, membranes 71 and 73 each have a graduated and asymmetrical pore size arrangement with the smallest size being closest to a gap 81 between the membranes where mixture 35 is swirling. For example, exterior surface 83 of inner membrane 73 is most dense with an average pore diameter D_I of approximately 1-10 microns or otherwise suitable to allow oil droplets 93 or oil from continuous film covering surface 83 to pass therethrough and to encourage wetting of the membrane/layer surface and covering of the pores 91 due to the affinity of oil 93 to the oleophilic and hydrophobic coating 77 thereon. The pore size and spacing is more open in an intermediate portion 95 behind surface 83 and are much more open in the larger support portion 97 adjacent an interior surface 99 defining the central and hollow lumen or passageway through the inner membrane. Outer membrane 71 is similarly constructed but in mirrored symmetry with its interior surface 101 being denser than its exterior surface 103. Similarly but in reverse, coating 79 on interior surface 101 of the outer membrane is hydrophilic and oleophobic, with its smallest average pore diameter D_o being less than 20 microns, preferably no greater than 1 micron. The graduated and asymmetric pores are inter-connected between the different density portions; such connectedness advantageously reduces fouling or plugging of pores by contaminants, especially as compared to a membrane having unconnected pores throughout its cross-sectional thickness.

[0020] With the (super)hydrophobic/olephilic membrane forming the inner wall and the hydrophilic membrane forming the outer wall of the flow channel, the rotating flow results in a centripetal force acting on oil droplets bringing them closer to the (super)hydrophobic/olephilic inner membrane (sink for oil) and away from the hydrophilic outer membrane (sink for water) thereby alleviating the fouling of the hydrophilic membrane by oil. At the same time, the water with lower oil concentration will be found in the vicinity of the interior surface of the outer hydrophilic membrane. The present system employs a cross-flow filtration hydrocyclone process since rotating flow is used. A notable difference as compared to conventional devices, however, is that instead of removing oil with a flow core, the oil is collected into the

(super)hydrophobic/olephilic tubular membrane positioned near the centerline of the present system.

[0021] Returning to Figure 2, a collecting tank or holder 111 concentrically surrounds outer membrane 73 with a small space therebetween. This allows for the transmission of water droplets through the pores in outer membrane for collection and removal by a fluid flow system including at least one outlet 113 and associated pipe 115 to a purified water receptacle 117. Collecting tank 111 is capped at its tail end or bottom by a sealed cap 119. Furthermore, an outlet 121 is connected to the tail end or bottom of the lumen or internal passageway within inner membrane 73 so as to allow the removal of the purified oil into an oil receptacle 123 connected thereto via a fluid flow system. A vacuum pump 125 is connected to outlet 121 to provide a pressure drop which assists in flowing the oil otherwise gathered within inner membrane 73. Moreover, an outlet 131 is connected to the tail or bottom end of gap 81 between the inner and outer membranes 73 and 71, respectively. Outlet 131 allows for removal of the concentrate flow that is remaining oil and water mixture 35 which did not flow through and get filtered by the pores of either membrane. The concentrate travels from outlet 131 to a fluid flow plumbing system 133 which includes a back pressure regulator 135, a pressure gauge 137, and optionally a pump (not shown), for either transmission back into feed tank 33 or to a downstream and subsequent dual affinity and hydrocyclone separation system such as a duplicate of that disclosed herein.

[0022] Figure 7 shows a preferred laboratory configuration for the present separation system 211. Separation system 211 contains a separation column 231 similar to the production configuration, however, an inner membrane 273 is elongated past the axial length of an outer membrane 271 such that a leading end of inner membrane 273 additionally extends into and through a rotating cylinder 251. Thus, a swivel 257 is sealed to allow cylinder 251 to rotate about the stationary and centrally located inner membrane 273 therein. A gas vessel 261 provides pressurized air through a pipe 265, monitored by a pressure gauge 263, to a connector inlet 267 in communication with a leading end of inner membrane 273. This provides air to a lumen or central passageway of inner

membrane 273 to assist in pushing out oil which has passed through its pores and is otherwise collecting within the lumen of the inner membrane. This is especially beneficial when the inner and outer membranes are horizontally oriented as is shown for this configuration. The present laboratory configuration additionally includes a data acquisition system using a programmable computer controller 268, flow meters 269, and a circulating chiller assembly 270. The diluted mixture and purified water are transmitted back into a feed tank 233 for experimental purposes while chiller is used to reduce experimental variables. Moreover, Moyno® and diaphragm pumps 241 and 237, respectively, and a feed tank impeller 239 are also utilized.

[0023] Referring to both the production and laboratory embodiments, the present separation system advantageously combines centripetal and gravitational forces of a hydrocyclone simultaneously in time and proximity with cross-flow filtering through the two membranes of opposite affinities. The use of the hydrocyclonic flow between most of and more preferably the entire longitudinal porous length of the inner and outer membranes maximizes these beneficial synergies. The synergistic advantages of the combined hydrocyclone oil and water separation with the membrane core construction and affinity/repellant nature of the membranes and/or their coatings, should provide superior performance as compared to a conventional hydrocyclone by itself and the use of a conventional membrane by itself.

[0024] While various embodiments have been disclosed, it should be appreciated that the separation system of the present disclosure may be additional altered. For example, it is envisioned that the combined hydrocyclone and outer membrane of the various constructions disclosed herein may be employed without requiring the use of an inner membrane, however, various beneficial advantages of the present system may not be achieved. Furthermore, asymmetrical membranes may be constructed with a hydrocyclone in different system configurations than that described herein, such as only with a single inner or outer membrane, although various advantages may not be realized. Alternatively, one or both of the membranes may have a frustoconical shape, however, the manufacturing and cost advantages may not be achieved. While

various dimensions, materials and plumbing systems have been disclosed, it should be appreciated that alternatives may be employed although this may forego certain advantages of the presently preferred system. It is intended by the following claims to cover these and any other departures from the disclosed embodiments which fall within the true spirit of this invention.

CLAIMS

The invention claimed is:

1. A separation system comprising:

a tubular outer membrane including pores;

a tubular inner membrane including pores, the inner membrane being located inside the outer membrane with a gap between the membranes; and

a liquid-rotation-inducing member;

wherein one of the membranes is hydrophilic and the other is hydrophobic; and

wherein the membranes and member operably cause hydrocyclonic and filtering separation.

2. The separation system of Claim 1, further comprising oil being separated from water by hydrocyclonic movement of an oil and water mixture between the membranes, at least some of the oil passing through the inner membrane and at least some of the water passing through the outer membrane.

3. The separation system of Claim 1, wherein the inner membrane deters water from passing therethrough and the outer membrane deters oil from passing therethrough.

4. The separation system of Claim 1, further comprising a hydrophilic and oleophobic coating located on an interior surface of the outer membranes, and gas pressure assisting in removing oil after it passes through the pores of the inner membranes.

5. The separation system of Claim 1, further comprising an Fe_2O_3 coating on one of the membranes.

6. The separation system of Claim 1, further comprising an oleophilic and hydrophobic or superhydrophobic coating located on an exterior surface of the inner membrane.

7. The separation system of Claim 1, further comprising a coating including at least one of: PTFE and PVDF, located on one of the membranes.

8. The separation system of Claim 1, wherein at least one of the membranes includes a rigid, ceramic material.

9. The separation system of Claim 1, wherein at least one of the membranes includes a sintered and compressed material

10. The separation system of Claim 1, wherein at least a majority of each of the inner and outer membranes is cylindrical.

11. The separation system of Claim 1, further comprising:

a tank substantially surrounding a porous exterior of the outer membrane;

a first outlet located adjacent a bottom of the tank allowing removal of the separated water from between the outer membrane and the tank;

a second outlet located adjacent a bottom of a central passageway in the inner membrane removing the separated oil from within the passageway; and

a third outlet removing any oil/water mixture remaining adjacent a bottom of the gap between the membranes.

12. The separation system of Claim 1, further comprising at least one tube supplying steam to an underground oil deposit and extracting the mixture therefrom, the extracted mixture being separated by the membranes.

13. The separation system of Claim 1, wherein the membranes separate the mixture which includes seawater and oil.

14. A separation system comprising:

a fluid passageway;

a first membrane including pores of substantially graduated sizes with the smallest size pores being closest to the passageway;

at least a second membrane, one of the first and second membranes being hydrophobic and the other being hydrophilic; and

a mixture of water and hydrocarbon flowing into the passageway in a hydrocyclonic motion to encourage centripetal migration of the hydrocarbon with respect to the water;

the pores of the membrane allowing one of the water and the hydrocarbon to pass through the membrane while deterring the other of the water and the hydrocarbon from passing through the membrane; and

the cyclonic movement and membrane pores separating at least some of the water and the hydrocarbon.

15. The separation system of Claim 14, wherein:

the at least second membrane includes an inner membrane coaxially located within the first membrane, the inner membrane has a central fluid passageway therein, and the inner membrane includes pores;

the first membrane includes the fluid passageway in a hollow middle thereof;

the hydrocarbon passes through the pores of the inner membrane while the inner membrane deters the water from passing therethrough; and

the water passes through the pores of the primary membrane while the primary membrane deters the hydrocarbon from passing therethrough.

16. The separation system of Claim 15, wherein the membranes have substantially the same elongated length, and the cyclonic movement of the mixture is between the membranes along at least a majority length of both of the membranes.

17. The separation system of Claim 14, wherein the hydrocarbon is oil, further comprising a hydrophilic and oleophobic layer located on an interior surface of the outer membrane.

18. The separation system of Claim 14, wherein the membranes include a rigid, ceramic material.

19. The separation system of Claim 14, wherein at least a majority of each of the membranes is cylindrical.

20. The separation system of Claim 14, wherein at least one of the membranes is tubular and in the center of the cyclonically moving mixture, and the cyclonic movement reduces fouling of the hydrophilic membrane by the hydrocarbon.

21. A separation system comprising:

a hollow first membrane;

at least a hollow second membrane, the second membrane being located concentrically inside the first membrane with a gap between the membranes; and

a first liquid at least partially separated from a second liquid by hydrocyclonic movement of the liquids within the gap between the membranes, at least some of the second liquid passing through the second membrane and at least some of the first liquid passing through the first membrane, in both situations the passing through occurring adjacent a majority of an axial length of the hydrocyclone;

a layer located on a surface of the first membrane having an affinity for the first liquid;

a layer located on a surface of the second membrane having an affinity for the second liquid;

the first membrane deterring the second liquid from passing therethrough and the second membrane deterring the first liquid from passing therethrough;

a collector substantially surrounding the first membrane to collect the first liquid which passes therethrough;

a first outlet connected to the collector removing the separated first liquid from between the first membrane and the collector; and

at least a second outlet connected to the second membrane removing the separated second liquid from within the second membrane.

22. The separation system of Claim 21, wherein at least one of the membranes includes a rigid, ceramic material.

23. The separation system of Claim 21, further comprising pores of each of the membranes being of a graduated cross-sectional size, and one of the liquids including oil and the other of the liquids including water.

24. The separation system of Claim 21, further comprising a hydrocyclonic generator causing the hydrocyclonic movement which reduces fouling of a hydrophilic one of the membranes by one of the liquids which is oil.

25. The separation system of Claim 21, wherein a majority of each of the membranes is circular-cylindrical.

26. The separation system of Claim 21, wherein trailing ends of the membranes are adjacent each other, but separated by the gap between them.

27. A separation system comprising:

a hydrocyclonic generator causing a mixture of oil and water to rotationally swirl about an axial centerline;

a porous and rigid membrane located adjacent a center of the externally swirling mixture, substantially coaxial with the centerline;

an inlet for the mixture being located adjacent a leading end of the membrane; and

an outlet located adjacent an opposite trailing end of the membrane for removing a filtered one of the oil and water from inside of the membrane;

the membrane extending along a majority centerline length of the hydrocyclonically swirling mixture.

28. The separation system of Claim 27, further comprising an outer rigid membrane surrounding the hydrocyclonically swirling mixture coaxial with the centerline, the center one of the membranes being hydrophilic and the outer membrane being hydrophobic.

29. The separation system of Claim 27, wherein the membrane is ceramic with asymmetrical pore sizes graduating from smaller size pores near an external surface thereof to larger size pores closest to the centerline.

30. The separation system of Claim 27, wherein the oil is removed from inside of the membrane adjacent an end thereof substantially opposite the hydrocyclonic generator.

31. A method of separating oil from water in a mixture, the method comprising:

(a) creating a hydrocyclonic flow of the mixture between inner and outer membranes;

(b) using the hydrocyclonic flow to encourage separation of the oil and water;

(c) flowing the oil through the inner membrane substantially temporally and locationally simultaneously with step (b); and

(d) flowing the water through the outer membrane substantially simultaneously temporally and locationally with steps (b) and (c).

32. The method of Claim 31, further comprising encouraging flow through of one of the liquids while discouraging flow through of the other of the liquids by use of a material layer located on at least one of the membranes.

33. The method of Claim 31, further comprising using ceramic material for the membranes.

34. The method of Claim 31, further comprising flowing separated oil from adjacent a bottom of the inner member.

35. The method of Claim 31, further comprising performing the separation after the oil is pumped from an underground oil field.

36. The method of Claim 31, further comprising performing the separation after the oil has spilled into seawater.

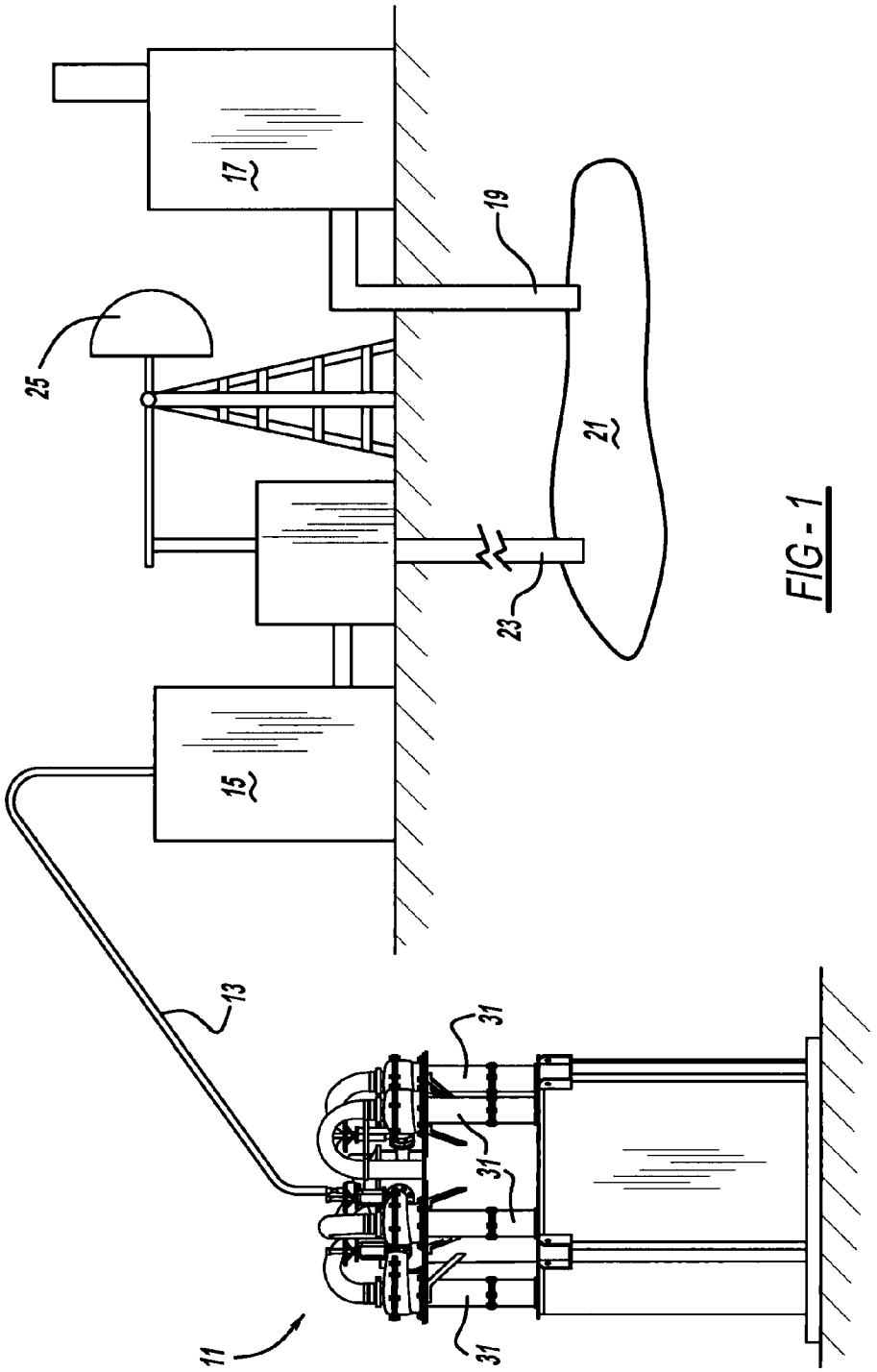

FIG - 1

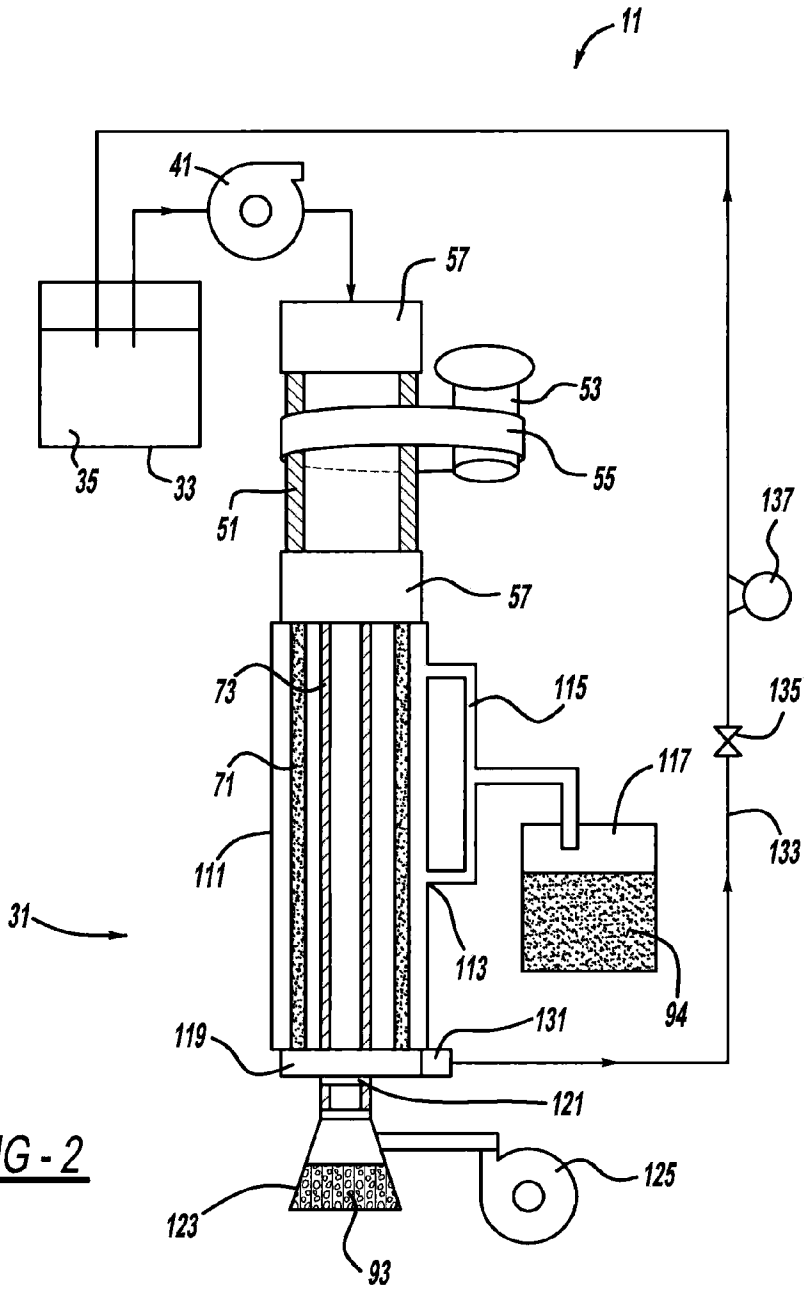
11
41
57
53
55
35
33
51
137
57
73
115
135
71
117
111
133
31
113
94
119
131
121
125
123
93

FIG - 2

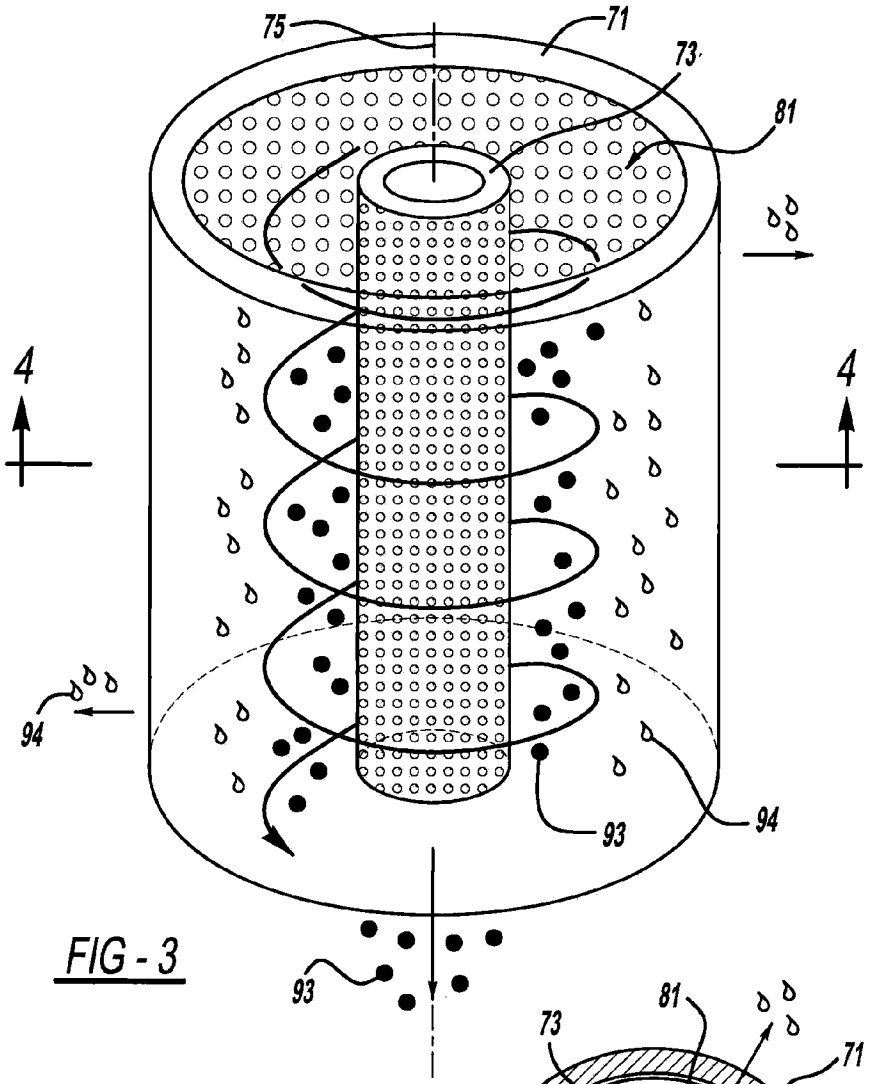

FIG - 3

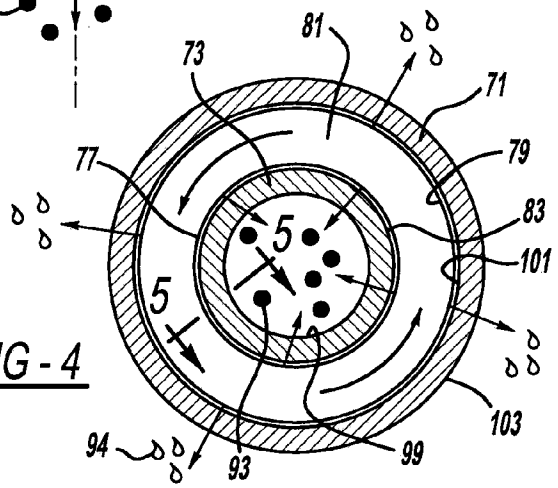

FIG - 4

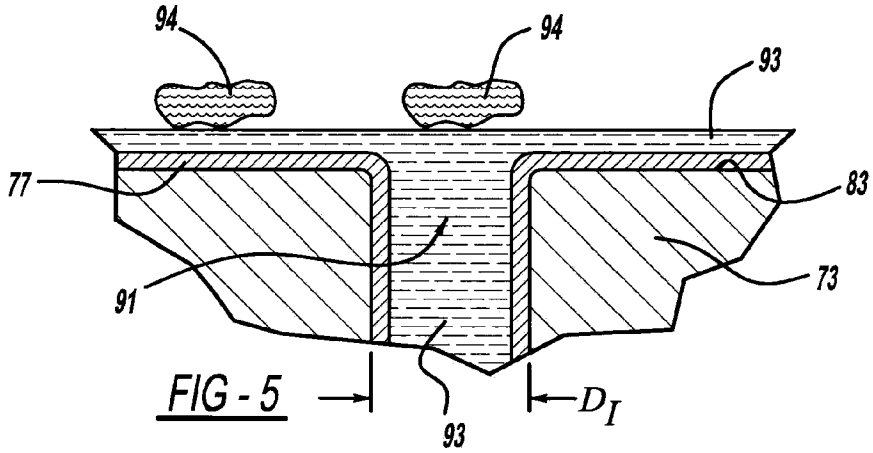

FIG - 5

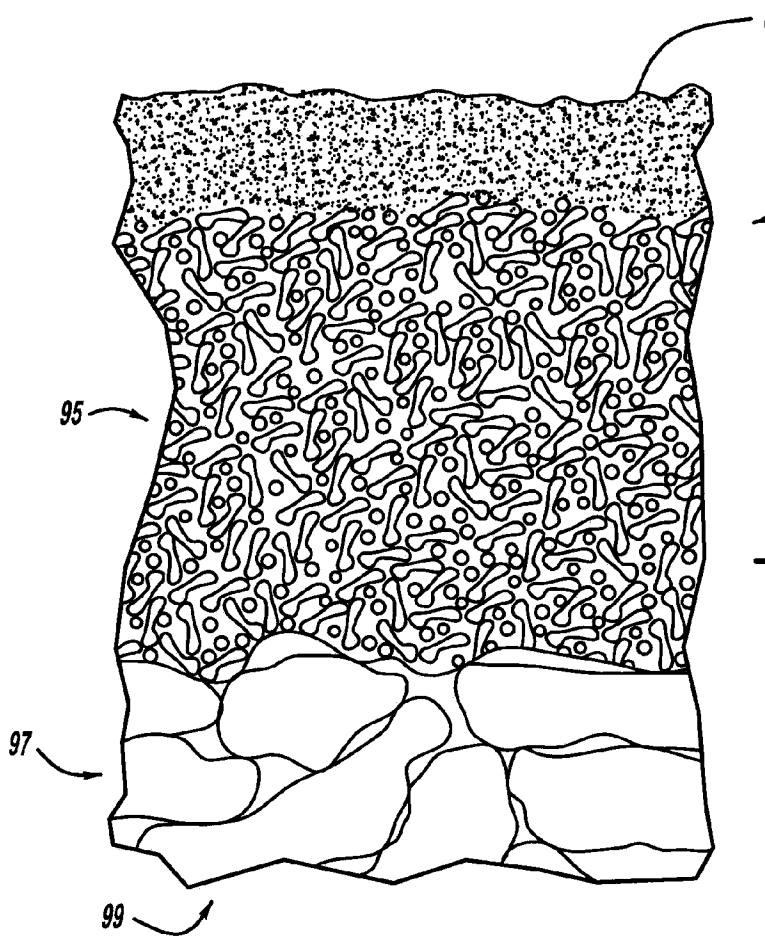

FIG - 6

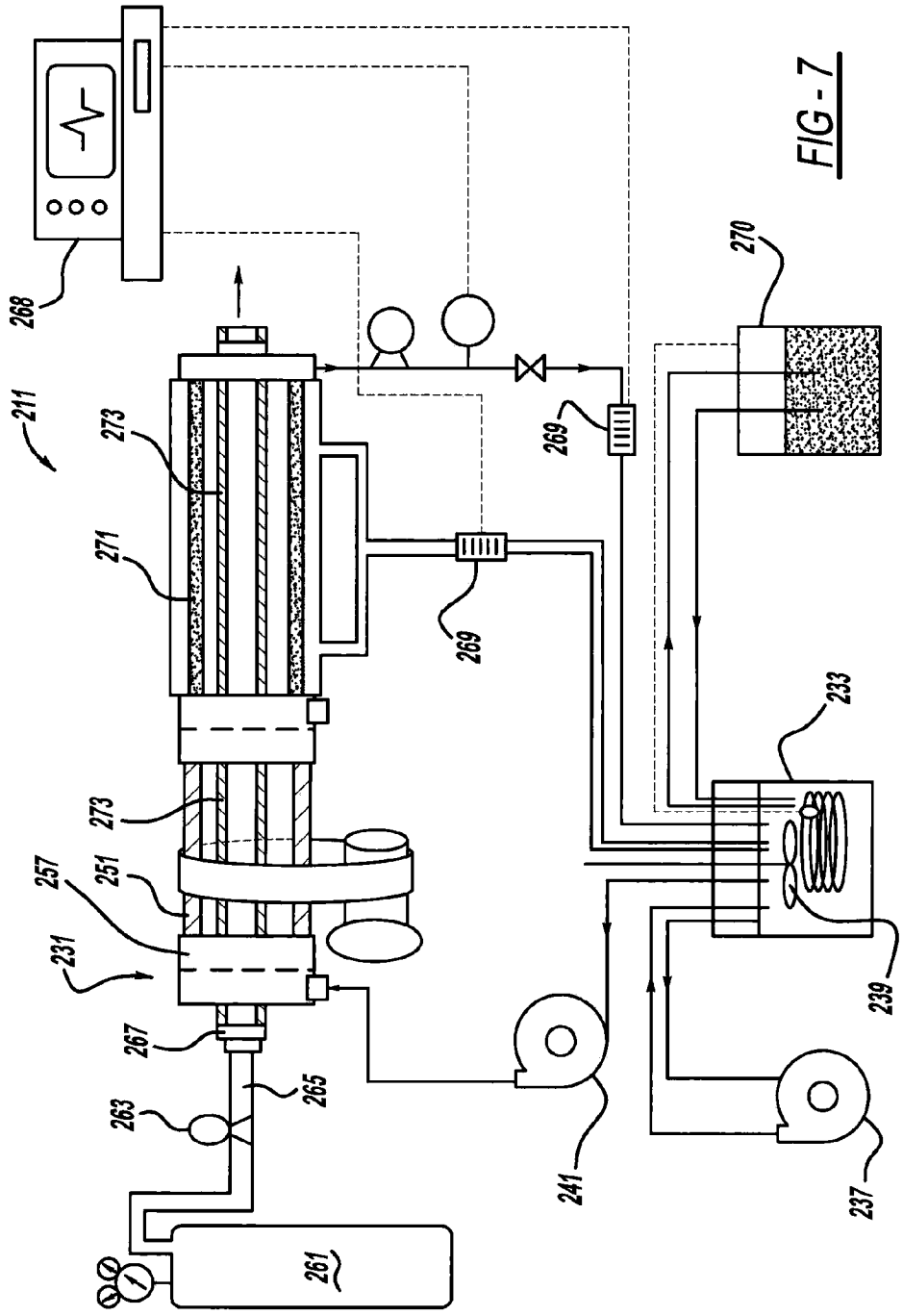
268
211
273
271
269
270
233
273
257
251
231
267
265
263
261
241
237
239

FIG - 7

INTERNATIONAL SEARCH REPORT

International application No
PCT/US2011/046884

A. CLASSIFICATION OF SUBJECT MATTER
INV. B01D63/16 B01D63/08 C02F1/38 C02F1/44 E21B43/34
ADD.

According to International Patent Classification (IPC) or to both national classification and IPC

B. FIELDS SEARCHED

Minimum documentation searched (classification system followed by classification symbols)
B01D C02F E21B

Documentation searched other than minimum documentation to the extent that such documents are included in the fields searched

Electronic data base consulted during the international search (name of data base and, where practical, search terms used)
EPO-Internal

C. DOCUMENTS CONSIDERED TO BE RELEVANT

Category*	Citation of document, with indication, where appropriate, of the relevant passages	Relevant to claim No.
X	US 4 876 013 A (SHMIDT IOSIF [US] ET AL) 24 October 1989 (1989-10-24) column 6, line 62 - column 7, line 5 column 7, line 41 - column 8, line 25 column 10, line 49 - column 12, line 49 column 15, line 33 - column 20, line 28 claims 1-3, 6-11; figures 8-12, 19, 24 the whole document -----	1-36
X	US 2002/189807 A1 (EMANUELE MARK A [US] ET AL) 19 December 2002 (2002-12-19) cited in the application paragraphs [0001], [0026] - [0031]; claims 1, 7; figure 2 the whole document -----	27-36

-/--

[X] Further documents are listed in the continuation of Box C.

[X] See patent family annex.

* Special categories of cited documents :

"A" document defining the general state of the art which is not considered to be of particular relevance

"E" earlier document but published on or after the international filing date

"L" document which may throw doubts on priority claim(s) or which is cited to establish the publication date of another citation or other special reason (as specified)

"O" document referring to an oral disclosure, use, exhibition or other means

"P" document published prior to the international filing date but later than the priority date claimed

"T" later document published after the international filing date or priority date and not in conflict with the application but cited to understand the principle or theory underlying the invention

"X" document of particular relevance; the claimed invention cannot be considered novel or cannot be considered to involve an inventive step when the document is taken alone

"Y" document of particular relevance; the claimed invention cannot be considered to involve an inventive step when the document is combined with one or more other such documents, such combination being obvious to a person skilled in the art.

"&" document member of the same patent family

Date of the actual completion of the international search	Date of mailing of the international search report
1 November 2011	15/11/2011

Name and mailing address of the ISA/	Authorized officer
European Patent Office, P.B. 5818 Patentlaan 2 NL - 2280 HV Rijswijk Tel. (+31-70) 340-2040, Fax: (+31-70) 340-3016	Veríssimo, Sónia

INTERNATIONAL SEARCH REPORT

International application No
PCT/US2011/046884

C(Continuation). DOCUMENTS CONSIDERED TO BE RELEVANT

Category*	Citation of document, with indication, where appropriate, of the relevant passages	Relevant to claim No.
X	US 2006/041216 A1 (MCLAUGHLIN JENNIFER K [US] ET AL) 23 February 2006 (2006-02-23) paragraphs [0049] - [0054], [0108]; figures 1, 5, 6 the whole document	1-36

X	WO 90/00922 A1 (MEMBREX INC [US]) 8 February 1990 (1990-02-08)	27-30
A	page 11 - page 12; claim 1; figures 3, 5; example 7 the whole document	4,6,7, 17,32

INTERNATIONAL SEARCH REPORT

Information on patent family members

International application No
PCT/US2011/046884

Patent document cited in search report	Publication date	Patent family member(s)	Publication date
US 4876013 A	24-10-1989	NONE	
US 2002189807 A1	19-12-2002	NONE	
US 2006041216 A1	23-02-2006	US 2008195025 A1	14-08-2008
		US 2008197076 A1	21-08-2008
WO 9000922 A1	08-02-1990	CA 1327023 C	15-02-1994