May 26, 1925. 1,539,421

C. KRAFT

ELECTRIC COMMUNICATING SYSTEM

Filed July 6, 1920

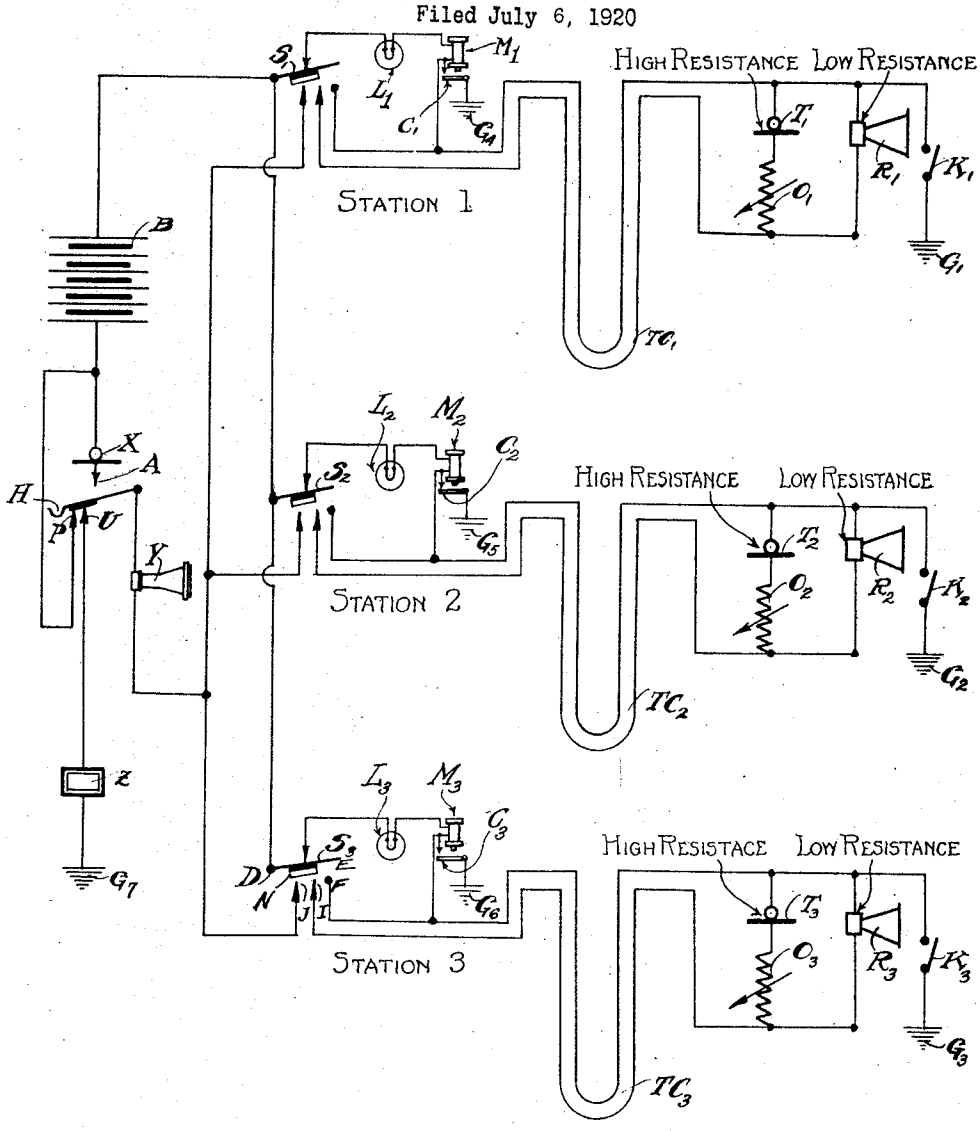

WITNESSES.
Grace Conroy.
A. L. Joyce

Carl Kraft
INVENTOR

BY L. A. Gatter
ATTORNEY

Patented May 26, 1925. 1,539,421

UNITED STATES PATENT OFFICE.

CARL KRAFT, OF NEW YORK, N. Y., ASSIGNOR OF ONE-HALF TO L. STEWART GATTER, OF NEW YORK, N. Y.

ELECTRIC COMMUNICATING SYSTEM.

Application filed July 6, 1920. Serial No. 394,215.

To all whom it may concern:

Be it known that I, CARL KRAFT, a citizen of the United States, and a resident of New York city, county and State of New York, have invented certain new and useful Improvements in Electric Communicating Systems, set forth in the following specification.

There is an increasing demand for the operation of elevators in high office buildings on a fixed schedule, the maintenance of which depends largely on the ability of the elevator operator to communicate with the elevator dispatcher or starter controlling a certain group of elevators or vice versa. There is also a growing demand for the so called "operatorless" elevators particularly in warhouses, marine terminals and garages where a group of elevators may all be operated by one person at a central point remotely situated from the elevators and where it is necessary for the central control or dispatcher to give orders to the various floors such as to close the elevator doors so that the car may be subject to the dispatcher's control. The perfection of the loud speaking telephone of both receiving and transmitting type has pointed the way to expedite and insure safety in the operation of these and other type of elevator installations where, as provided by my invention, the cost of installing such a system is reduced to a minimum and does not offset the manifold advantages in speed and safety obtained.

An object of my invention is to provide safety, in the case of fire or otherwise, by means of a system of loud speaking telephonic communication in connection with elevators so that the operator in the car need not leave his car switch and jeopardize control of the car in order to listen or speak to the dispatcher or that any person outside a bank or group of elevators at any floor may communicate with the dispatcher from a point remote from the elevators.

A further object of my invention is to provide an electrical circuit consisting of only two wires from outlying stations to a central station for the purpose of communication thru loud speaking transmitters and receivers in each outlying station and signalling from said outlying stations in a selective manner so that the cost of wiring may be reduced to a minimum and not exceed the cost of wiring of the ordinary two wire system used with the typical telephone communicating set, and so that the induced currents set up by the elevator operating traveling cables hanging and moving adjacent to the telephone cables may be reduced to a minimum by using only two wires.

A further object of my invention is to provide that in such a two wire communicating system for elevators where any grounded connections would necessarily go thru the steel rails or hoist ropes and hence be subject to great variations in resistance such grounded circuit be not used as a talking circuit.

A further object of my invention is to provide that in such a system of communication the operator in the car or person at a landing may signal the dispatcher thru a selective means such as electric lamps or annunciators and that a "self-holding" electro-magnetic device be provided with each such light or annunciator so that once closing said circuit will establish it and hold it although the manual operation of establishing it may be but momentary.

Another object of my invention is to provide such a system with the loud speaking receiver and transmitter at the outlying stations so connected in a two wire circuit that the receiver does not receive or amplify the sounds impressed upon the transmitter and hence does not permit of the objectionable amplification of the voice of any one using that transmitter.

Reference to the accompanying drawings will aid in explanation of my invention. The figure shows a preferred embodiment of the circuits, connections and units used with my invention but it must be understood that numerous other circuits and combinations would be within the scope of my claims.

Referring to the drawing in detail the keys K_1, K_2, and K_3 are located at the outlying stations, three of which are shown as No. 1, 2 and 3, which, in this case would be elevator cabs. One side of these keys is grounded at G_1, G_2, and G_3. Loud speaking, high resistance transmitters T_1, T_2, T_3, containing in circuit variable resistances O_1, O_2 and O_3 respectively are connected in parallel with loud speaking low resistance receivers R_1, R_2 and

R_3 all connected as shown with two wires leading thru the traveling cables TC_1, TC_2 and TC_3.

At the central or dispatching station is the ordinary transmitter X and receiver Y of low resistance together with the hook for same H containing contacts A, P and U; the battery B, the buzzer Z connected to ground G_7, the lights L_1, L_2 and L_3, the self-holding coils M_1, M_2, M_3 with their contacts C_1, C_2 and C_3 connected to grounds G_4, G_5 and G_6 and switch keys S_1, S_2 and S_3 of selective switches all for their respective outlying stations 1, 2 and 3.

Switches S_1, S_2 and S_3 are identical in construction and may be understood by an explanation of any one such as S_3, containing contacts E, F and I, J, bridge N being insulated from arm D.

The operation of the circuit might be as follows: The operator at the outlying station or in the car 3 would momentarily press key K_3 which would establish the circuit from G_3 thru K_3, thru one wire of the traveling cable, thru coil M_3, thru light L_3, contact E of switch S_3 normally open on in the made position, thru D to the common wire of the selector switches to battery B, to contacts and bridge P, U, normally closed by receiver X hanging on hook H and then thru buzzer Z again to ground. Coil M_3 being momentarily energized would close contact C_3 normally open and establish circuit from ground G_6 to G_7 as before and cause buzzer Z to operate although K_3 has meanwhile opened.

The central starter or dispatcher now removes receiver Y and presses selector switch S_3 either or both operations opening buzzer and light ground circuits by opening contacts P, U, and E, deenergizing M_3 and hence opening C_3. The talking circuit is now made and all grounds of the selective signal circuit removed. The dispatcher at master phone speaks into the low resistance transmitter X which is carried thru contact A, now established, receiver Y, contacts I, J of selector switch S_3, one traveling cable wire, across low resistance receiver R_3, which is not short circuited by high resistance transmitter T_3, then back thru the other traveling cable wire to contacts E, F of selector switch S_3, thru the common wire of selector switches, thru battery B again to transmitter X.

The outlying station responds without any further movement directly thru loud speaking high resistance transmitter T_3, variable resistance O_3 having been adjusted for the line distances in each case, over the same circuit to receiver Y, no effect caused by T_3 is apparent in R_3 since no battery is connected in circuit.

The dispatcher can of course speak at any time directly to outlying station or operator in car without necessity of any operation on the part of the latter.

What I claim and what I desire to secure by United States Letters Patent is:—

1. In an electric communicating system the combination, in a two wire circuit from each of a plurality of elevator cars to a central dispatcher station, of a loud speaking receiver of low resistance with a loud speaking transmitter of high resistance at each car connected in parallel with said low resistance receiver so that the transmitter is not a short circuit for the receiver and so that the receiver does not receive the effects of the transmitter; batteries common to all and connected in series with one of said wires to each car; a master telephone at said dispatcher station with low resistance transmitter and receiver; the hook of said master telephone; which said hook when in talking position makes contact connecting the common batteries in series with the master telephone transmitter and receiver and to the other wire of said wires to each car as selected at the dispatcher station; selector switches arranged to open both wires to the car and by means of which said selection can be made.

2. In an electric communicating system the combination, in a two wire circuit from each of a plurality of elevator cars to a central dispatcher station, of a loud speaking receiver of low resistance with a loud speaking transmitter of high resistance at each car connected in parallel with said low resistance receiver so that the transmitter is not a short circuit for the receiver and so that the receiver does not receive the effects of the transmitter; batteries common to all and connected in series with one of said wires to each car; a master telephone at said dispatcher station with low resistance transmitter and receiver, the hook of said master telephone; which hook when in talking position makes contact connecting the common batteries in series with the master telephone transmitter and receiver and to the other wire of said wires to each car as selected at the dispatcher station; selector switches arranged to open both wires to the car and by means of which said selection can be made; each elevator cab containing a call switch mounted convenient to the operator the circuit to one side of which is grounded in the cab and the other side connected to one of said wires; a visual indicating device in series with said call switch; a contact on the respective selector switch also in series with said call switch and with said visual indicating device, which contact is made when the selector switch is in a non-talking position and thence in series to the battery; a bridge contact on but insulated from the hook of the master phone in series therewith which bridge contact is made when

said telephone is in a talking position; an auditory indicating device in series therewith and then to a ground connection so that when the call switch in any particular car is closed the auditory indicating device will operate and the proper visual indicating device will signal the dispatcher and when said hook or selector switch is in talking position the ground circuits are entirely opened.

3. In an electric communicating system the combination, in a two wire circuit from each of a plurality of elevator cars to a central dispatcher station, of a loud speaking receiver of low resistance with a loud speaking transmitter of high resistance at each car connected in parallel with said low resistance receiver so that the transmitter is not a short circuit for the receiver and so that the receiver does not receive the effects of the transmitter; batteries common to all and connected in series with one of said wires to each car; a master telephone at said dispatcher station with low resistance transmitter and receiver; the hook of said master telephone; which hook when in talking position making contact connecting the common batteries in series with the master telephone transmitter and receiver and to the other wire of said wires to each car as selected at the dispatcher station; selector switches arranged to open both wires to the car and by means of which said selection can be made; each elevator cab containing a call switch mounted convenient to the operator, the circuit to one side of which is grounded in the cab and the other side connected to one of said wires; a small solenoid switch with coil in series with said wire and to one side of the contact for said solenoid switch, the other side of the contact being grounded, the other side of said coil being connected in series with a visual indicating device; a contact on the respective selector switch also in series therewith which contact is made when the selector switch is in a non-talking position and thence in series to the battery; a bridge contact on but insulated from the hook of the master telephone in series therewith, which bridge contact is made when said telephone is in a talking position; an auditory indicating device in series therewith and then to a ground connection so that when the call switch in any car is momentarily closed the solenoid switch contact closes and causes the coil thereof to be maintained thru the grounded connection established by said contact and maintained until the hook or selector switch takes the talking position and entirely removes all grounded circuits.

In testimony whereof I have signed my name to this specification this 3rd day of May, 1920.

CARL KRAFT.

Witnesses:
MARIE CONROY,
A. L. JOYCE.