C. H. WOODS.

OBSERVATION BUOY AND FIRE CONTROL FOR FLOATING MINES.

APPLICATION FILED APR. 12, 1915.

1,195,317. Patented Aug. 22, 1916.

Fig. 1.

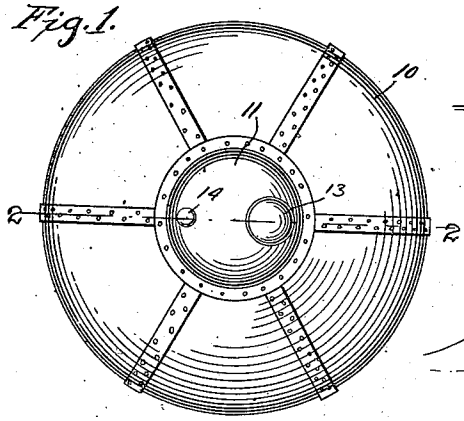

Fig. 3.

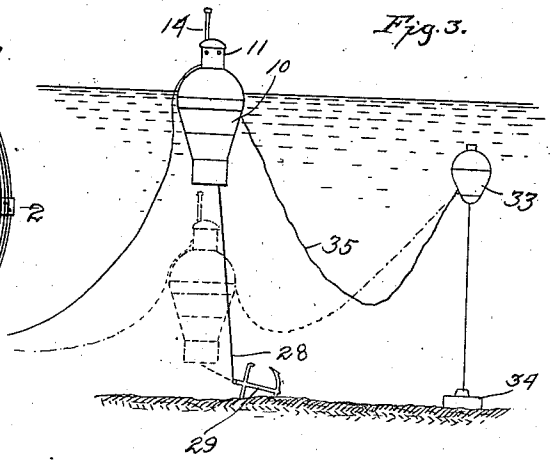

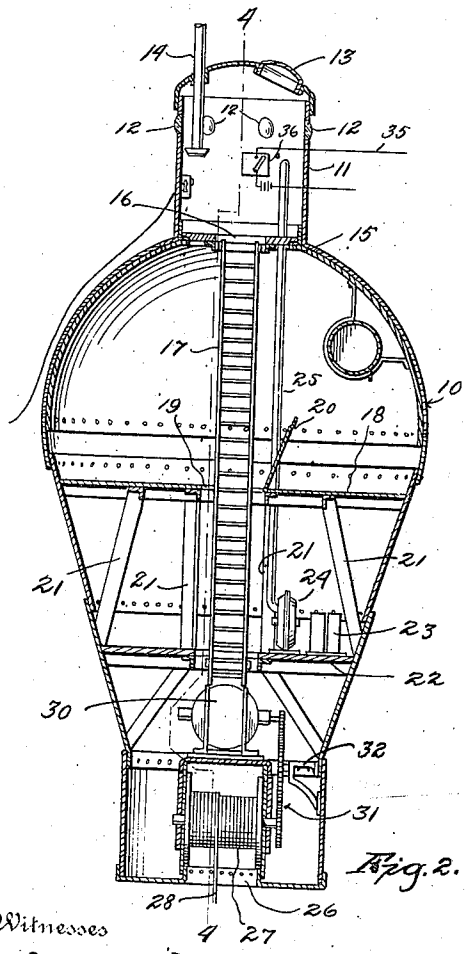

Fig. 2.

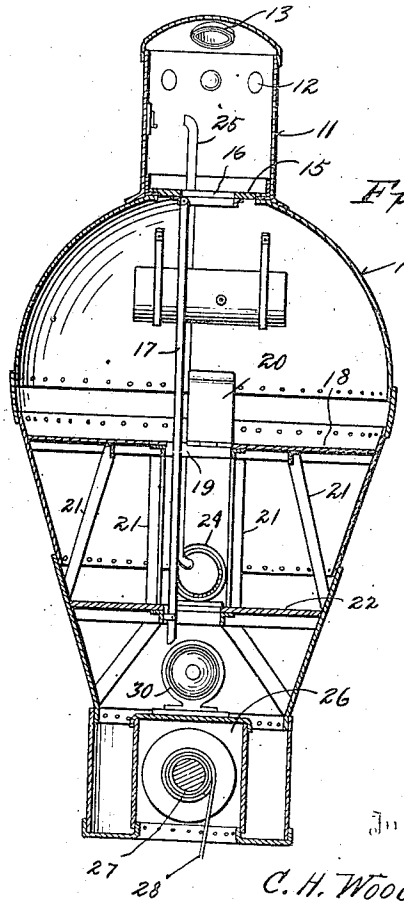

Fig. 4.

Witnesses

A. J. MacCarter

Harry M. Tests

Inventor

C. H. Woods

By Chandler & Chandler

Attorneys

UNITED STATES PATENT OFFICE.

CHARLES H. WOODS, OF SPRINGFIELD, MASSACHUSETTS.

OBSERVATION-BUOY AND FIRE CONTROL FOR FLOATING MINES.

1,195,317. Specification of Letters Patent. Patented Aug. 22, 1916.

Application filed April 12, 1915. Serial No. 20,812.

To all whom it may concern:

Be it known that I, CHARLES H. WOODS, a citizen of the United States, residing at Springfield, in the county of Hampden, State of Massachusetts, have invented certain new and useful Improvements in Observation-Buoys and Fire Controls for Floating Mines; and I do hereby declare the following to be a full, clear, and exact description of the invention, such as will enable others skilled in the art to which it appertains to make and use the same.

This invention relates to improvements in floating mines and particularly to a fire control station for the mines.

The principal object of the invention is to provide a floating conning tower from which a floating mine or mines can be exploded at will.

Another object is to provide a conning tower electrically connected with a floating mine or mines and which is capable of being quickly submerged.

Other objects and advantages will be apparent from the following description when taken in connection with the accompanying drawing.

In the drawing: Figure 1 is a plan view of the conning tower which is arranged to float in the water, Fig. 2 is a section on the line 2—2 of Fig. 1, Fig. 3 is a view showing a mine and floating buoy illustrating the relative arrangements of the two, the dotted lines showing the buoy submerged, and Fig. 4 is a vertical section on the line 4—4 of Fig. 2.

Referring particularly to the accompanying drawing, 10 represents a hollow floating body preferably in the form of a buoy in the upper portion of which is a conning tower 11 having the port lights 12, and the hatch 13 which is secured in the top of the conning tower so as to be water tight. A periscope tube 14 is mounted in the top of the conning tower. In the bottom of the tower is a floor 15 having a hatch-way 16 through which passes a vertical companion ladder 17 which extends down into the lower or hold portion of the buoy.

A deck or floor 18 is disposed midway between the conning tower and the hold and in this deck is a hatch-way 19 closed by a hatch 20. This deck is suitably braced by the braces 21. Below the deck is a supporting shelf 22 on which are mounted electric batteries 23 and a ventilating air pump 24, to the latter of which is connected a pipe 25 leading up into the conning tower and out through one side thereof for providing proper ventilation.

In the center of the bottom of the buoy is formed a well 26 and disposed in the well is a drum 27, its shaft being journaled in the side walls of the well. Wound on this drum is a cable 28 to the lower end of which is secured a suitable anchor 29. Mounted in the hold above the well is an electric motor 30 suitably connected to one end of the drum by means of the train of gearing 31, one of said gears being mounted in a bracket 32. Disposed at a proper distance from the buoy is a floating mine 33 anchored by means of the weight 34. Leading from the mine into the buoy are electric conductors 35 which are connected to a suitable circuit closer 36. The buoy is also arranged to be connected to the shore by telephone.

In the operation of the device, the buoy normally floats so that the conning tower and periscope are above the water permitting the occupant of the conning tower to view the surface of the water for a radius of several miles, thus permitting him to see an approaching ship. Should the ship be other than a belligerent, the buoy is permitted to remain floating; but, should the ship be a belligerent, that is an enemy's ship, the occupant of the buoy will immediately start the motor 30 so as to wind the cable 28 on the drum and thus pull the buoy down below the surface sufficiently to be below even a submarine. The occupant then watches to see when the enemy's ship is over the mine, and at this moment closes the circuit to explode the mine and destroy the ship. By means of telephone connections with the shore, notice can be given to the land batteries of the approach of an enemy's fleet so that the shore batteries can be ready to fire when the fleet comes within range.

From the foregoing it will be seen that I have provided a simple and novel device whereby floating mines are rendered harmless to neutral ships but can be exploded at will by the occupant of the buoy. The buoy can be placed out to sea a suitable distance, for instance, twenty or twenty-five miles and control a battery of mines so that any one or all of them can be exploded at the will of the occupant of the buoy.

What is claimed is:

An observation float comprising a hollow body, the lower end of said body being provided with a downwardly opening well, a winding drum having its shaft extending through the walls of the well and into the body, a cable windable on the drum and having an anchor fixed to its free end, a motor in the body having connection with one of the ends of the drum shaft for winding the cable on the drum whereby the float can be submerged.

In testimony whereof, I affix my signature, in the presence of two witnesses.

CHARLES H. WOODS.

Witnesses:

FRANK L. GOULD,

MALCOLM U. ARTHUR.

Copies of this patent may be obtained for five cents each, by addressing the "Commissioner of Patents, Washington, D. C."