Dec. 23, 1952 C. V. BROOKS 2,622,605

MOTOR BLOCK AND RADIATOR CLEANING MACHINE

Filed Sept. 9, 1949 2 SHEETS—SHEET 1

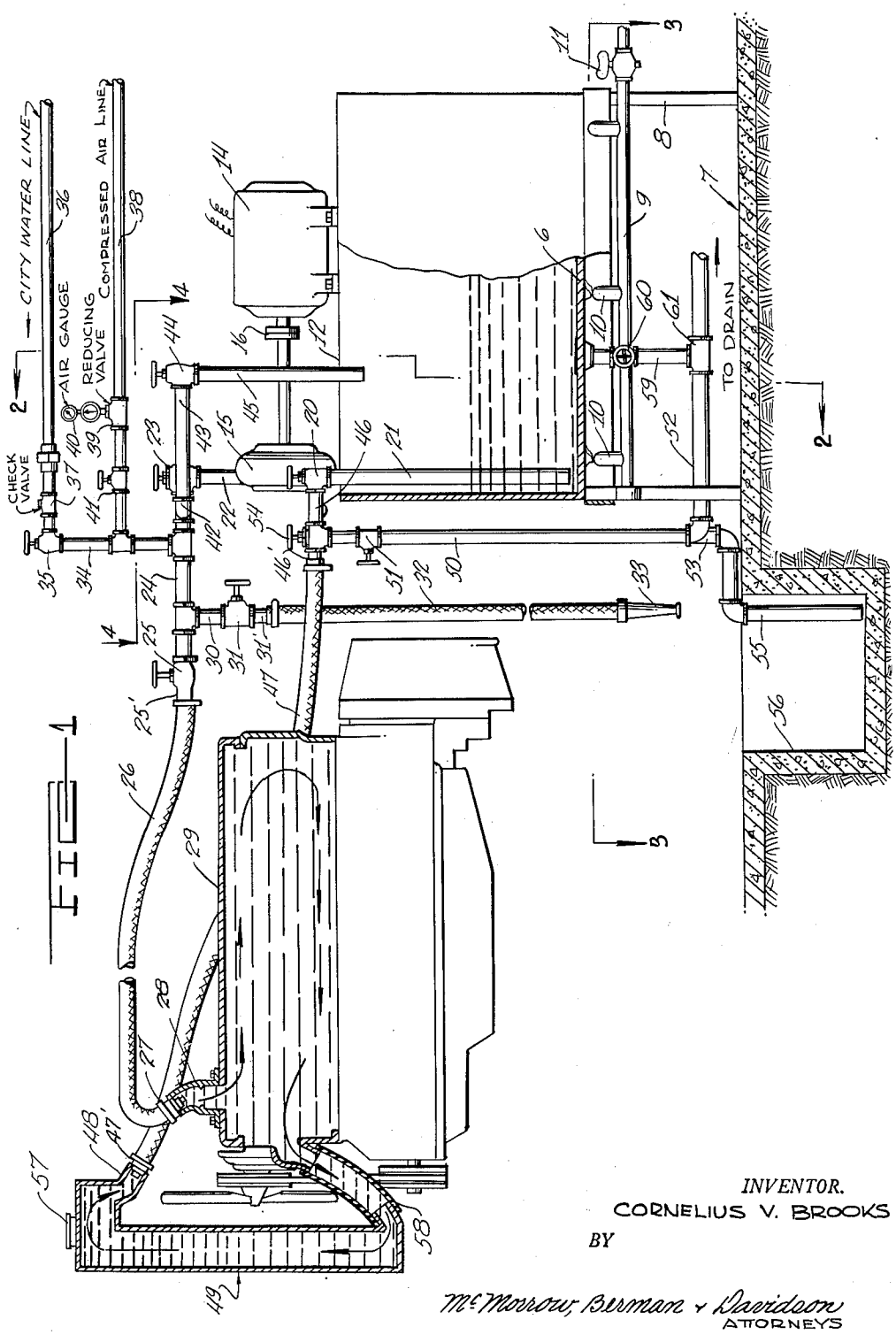

FIG. 1

INVENTOR.
CORNELIUS V. BROOKS
BY

McMorrow, Berman & Davidson
ATTORNEYS

Dec. 23, 1952 C. V. BROOKS 2,622,605

MOTOR BLOCK AND RADIATOR CLEANING MACHINE

Filed Sept. 9, 1949 2 SHEETS—SHEET 2

FIG—4

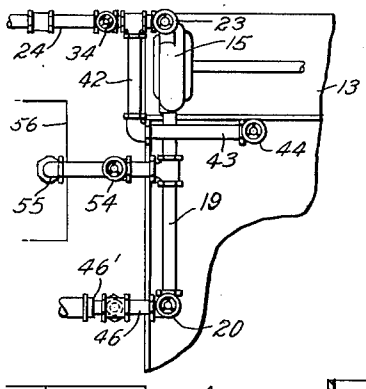

FIG—2

FIG—3

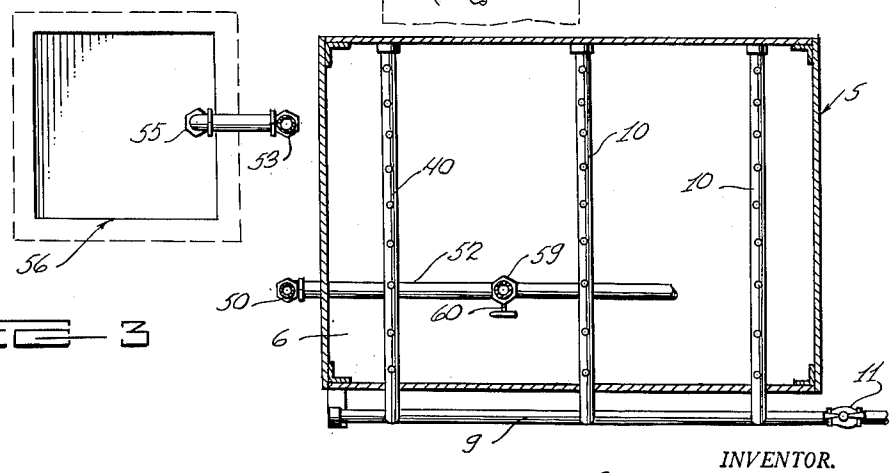

INVENTOR.
CORNELIUS V. BROOKS

BY

McMorrow, Berman + Davidson
ATTORNEYS

Patented Dec. 23, 1952

2,622,605

UNITED STATES PATENT OFFICE

2,622,605

MOTOR BLOCK AND RADIATOR CLEANING MACHINE

Cornelius V. Brooks, Bluefield, W. Va.

Application September 9, 1949, Serial No. 114,816

3 Claims. (Cl. 134—102)

1

This invention relates to an improved machine and method for reverse flushing the motor blocks and radiators of internal combustion engines, the primary object of the invention being to provide a machine and method of this character, employing heated aqueous chemical flushing solution and air pressure, in such manner that accumulations of rust, scale, and dirt are more efficiently and completely removed from the motor blocks and radiators without recourse to mechanical or manual cleaning.

A further important object of the invention is the provision of a machine of the above indicated character wherein pumping means is provided for circulating heated cleaning solution through the motor block and radiator, and wherein compressed air means is provided to assist and accelerate the circulation of the cleaning solution, the compressed air means being arranged so as to be readily controllable to continuously apply compressed air to the solution at a predetermined constant or variable rate with the pump means not in operation or to apply compressed air to the solution in bursts.

Another important object of the invention is to provide a machine of the character indicated above which can be made in a compact and well integrated form, so as to be suitable for use and installation in small as well as large shops, such as radiator and/or automobile repair shops.

Other important objects and advantageous features of my invention will be apparent from the following description and the accompanying drawings, wherein, merely for present purposes of illustration, a specific embodiment of the invention is set forth in detail.

In the drawings:

Figure 1 is a general schematic view, partly in side elevation and partly in vertical longitudinal section, showing said embodiment connected to a motor block and radiator to be cleaned.

Figure 2 is a transverse vertical section taken on the line 2—2 of Figure 1.

Figure 3 is a horizontal section taken on the line 3—3 of Figure 1.

Figure 4 is a sectional view taken on the line 4—4 of Figure 1.

Referring in detail to the drawings, wherein like numerals designate like parts throughout the several views, the numeral 5 generally designates a rectangular chemical solution tank having a flat horizontal bottom wall 6, the tank being supported above the floor 7 by a stand 8 which also supports a horizontal gas pipe 9 having burners 10 to heat the tank bottom, a valve

2

11 at one end of the pipe 9 being connected with a suitable gas supply (not shown). The burners 10 extend across the tank, as shown in Figure 3.

Projecting laterally from one side of the tank 5 on a level with the open top 12 of the tank is a horizontal platform 13, upon which is mounted an electric motor 14 and a rotary spur gear pump 15, with the shafts of the motor and the pump coupled as indicated at 16. The pump 15 has a laterally inwardly directed intake 17 and a vertical discharge 18.

To the pump intake 17 is rigidly connected a pipe 19 reaching horizontally across the top of the tank 5 and having a hand valve 20 constituting a coupling for a vertical chemical solution take up pipe 21 which depends in the tank to a point close to the tank bottom 6.

A short vertical pipe 22 rising from the pump discharge 18 has on its upper end an angle valve 23 to which is connected a forwardly projecting horizontal pipe 24 terminating at its forward end in a valve 25 having an adapted 25' to which is connected the rear end of a flexible hose 26 having on its forward end an adapter 27 for connection, as shown in Figure 1, with the upper connection 28 of a motor block 29.

To the rear of the valve 25 the pipe 24 has connected thereto a depending pipe 30 having a valve 31 therein terminating in an adapter 31' to which is connected one end of a flexible hose 32 having a nozzle 33 on its free end.

At a point rearward of the pipe 30 there is connected to the pipe 24 an upstanding pipe 34 terminating at its upper end in an angle valve 35 to which is connected a city water line 36 with a backflow check valve 37 therein. At a point between the valve 35 and the pipe 24 a compressed air line 38 is connected to the upstanding pipe 34, the air line having connected therein a pressure reducing valve 39 coupled with an air pressure gauge 40, with a manual valve 41 connected in the air line between the pressure reducing valve 39 and the pipe 34.

A solution return pipe 42 is connected to the horizontal pipe 24 between the upstanding pipe 34 and the valve 23 and extends laterally from the pipe 24 and has a rearwardly extending portion 43 terminating in a valve 44 from which a vertical pipe 45 depends into the upper part of the tank 5.

Connected to extend forwardly from the valve 20 on the upper end of the solution uptake pipe 21 is a horizontal pipe 46 terminating at its forward end in an adapter 46' connected to the rear

end of a flexible hose 47 having an adapter 47' arranged to be connected to the upper outlet fitting 48 of the radiator 49. Connected to the pipe 46 at a point between the valve 23 and the hose 47 is a depending pipe 50 having a valve 51 therein and terminating at its lower end in a pipe 52 leading to a suitable drain (not shown).

Another intake pipe 53, depending from a valve 54 in the pipe 19 between the pump intake 17 and the valve 20, has an open lower end portion 55 arranged to, when the valves 54, 23 and 44 are open with all other valves closed, pick up solution from a flush pit 56 sunk in the floor 7 forwardly of the tank 5, and in which radiators removed from their associated engines are adapted to be operated upon with the present machine.

In using the present machine, the cap 57 of the radiator 49 is tightly closed and the lower hose connection 58 between the lower part of the radiator 49 and the lower part of the motor block 29 is in place to participate in the circulation of solution and air, as indicated by the arrows in Figure 1. A drain pipe 59, depending from the bottom 6 of the tank 5 connects with the drain pipe 52 at 61 and has a shut-off valve 60 therein.

Operation

The tank 5 is filled with water from the line 36 by opening the valve 35, and the burners 10 are lighted to heat the tank and the water therein, all of the other valves being closed except valve 44 controlling return of solution to the tank 5 through the pipe 45. The valve 35 is closed when the tank 5 is full of water.

While the water in the tank 5 is heating the motor block thermostat is removed and the adapter 27 of the hose 26 is connected to the upper block connection 28 and the adapter 47' of the hose 47 is connected to the upper radiator connection 48, the coolant having been drained from the radiator 49 and block 29.

With the radiator overflow (not shown) plugged by suitable means, the tightness of the connections is tested by opening valves 25 and 51 and then water supply valve 35, and then opening and closing compressed air supply valve 41 so as to produce spurts of air at about twelve pounds pressure as the pressure of the city water supply builds up in the system. This operation is continued until the discharge from the drain pipe 52 shows clear, whereupon water supply valve 35 is closed, leaving the system full of water. The water residing in the system is then discharged from the system by opening and closing the air valve 41 intermittently, after which air valve 41 and drain valve 51 are closed. This effects reverse flushing of the radiator 49 and motor block 29, the bursts of air under pressure acting to loosen and remove encrustations and clogged matter from the interiors of the radiator and block, and the pressure flow of clear water serving to carry off the removed material to the drain. The air pressure used in this operation is limited to about 12 pounds in order to avoid damage to the water pumps of certain engines and depositing of removed material in the water pumps.

At the end of the above described operations, valves 20, 23, and 25 are opened, with all other valves closed, and the electric motor 14 is started so as to operate the pump 15. Suitable chemicals having been added to the hot water in the tank 5 the hot chemical solution at about 185 degrees F. is then pumped through the system so as to produce reverse flushing of the radiator 49 and motor block 29 for approximately forty-five minutes, after which the motor 14 is stopped. At this point the operator may, if desired, close valve 23 and open valve 44 and start the engine so as to return the solution to the tank 5 through the radiator 49 and block 29, with the solution being moved therethrough in the normal direction by the water pump of the engine.

The hot chemical solution in the system including the engine block and radiator is flushed out of the system with clear water and compressed air by opening air valve 41, with all other valves closed except valves 25 and 51. Air valve 41 is opened slowly and then intermittently opened and closed until the hot chemical solution has been discharged through the pipe 52 to the drain (not shown). The temperature of the engine should be sufficiently low at this point to permit of flushing the system with cold city water from the supply pipe 36 by opening the water valve 35 and supplying bursts of compressed air by opening and closing the air valve 41 until the water runs out of the system clear.

In cleaning radiators detached from their associated engines, the radiators are placed in or over the pit 56, and with their overflows and filling openings plugged, the radiators may be tested for leaks and then reverse flushed by the machine in the manner described above, the hoses 47 and 26 being connected to the upper and lower radiator connections, respectively, suitable drain means (not shown) being provided for the pit 56 where desirable. The hose 32 may be used to flush and clean the exteriors of the radiators in the pit 56.

What is claimed is:

1. A motor block and radiator cleaning machine comprising a tank having an open top for cleaning fluid, a platform positioned adjacent the open top of said tank and supported by the latter, a pump mounted on said platform, said pump having a horizontally disposed intake and a vertically disposed discharge, an intake pipe leading from the interior of said tank adjacent the bottom thereof to and connected to said pump intake, a first valve in said intake pipe, a first upstanding output pipe having its lower end connected to said pump discharge, a second valve on the upper end of said outlet pipe, a second horizontally disposed output pipe having one end connected to said second valve, a third valve connected to the other end of said second named pipe, a first flexible hose having one end connected to said third valve and having the other end adapted for connection with the upper part of an engine block, a third upstanding output pipe having its lower end connected to said second output pipe intermediate said second and third valves, a fourth valve on the upper end of said third output pipe, a first supply pipe for water under pressure connected to said fourth valve, a second supply pipe for air under pressure connected to said third output pipe intermediate its lower and upper ends thereof, a fifth valve in said second supply pipe, a second flexible hose having one end adapted for connection to the upper part of a radiator and having the other end connected to said first valve, and a return pipe having one end connected to said second output pipe intermediate its ends and having the other end in communication with the interior of said tank.

2. A motor block and radiator cleaning machine comprising a tank having an open top for

cleaning fluid, a platform positioned adjacent the open top of said tank and supported by the latter, a pump mounted on said platform, said pump having a horizontally disposed intake and a vertically disposed discharge, an intake pipe leading from the interior of said tank adjacent the bottom thereof to and connected to said pump intake, a first valve in said intake pipe, a first upstanding output pipe having its lower end connected to said pump discharge, a second valve on the upper end of said output pipe, a second horizontally disposed output pipe having one end connected to said second valve, a third valve connected to the other end of said second named pipe, a first flexible hose having one end connected to said third valve and having the other end adapted for connection to the upper part of an engine block, a third upstanding output pipe having its lower end connected to said second output pipe intermediate said second and third valves, a fourth valve on the upper end of said third output pipe, a first supply pipe for water under pressure connected to said fourth valve, a check valve in said first supply pipe, a second supply pipe for air under pressure connected to said third output pipe intermediate the lower and upper ends thereof, a fifth valve in said second supply pipe, a second flexible hose having one end adapted for connection to the upper part of a radiator and having the other end connected to said first valve, a return pipe having one end connected to said second output pipe intermediate its ends and having the other end in communication with the interior of said tank, and a sixth valve in said return pipe intermediate its ends.

3. A motor block and radiator cleaning machine comprising a tank having an open top for cleaning fluid, a platform positioned adjacent the open top of said tank and supported by the latter, a pump mounted on said platform, said pump having a horizontally disposed intake and a vertically disposed discharge, an intake pipe leading from the interior of said tank adjacent the bottom thereof to and connected to said pump intake, a first valve in said intake pipe, a first upstanding output pipe having its lower end connected to said pump discharge, a second valve on the upper end of said output pipe, a second horizontally disposed output pipe having one end connected to said second valve, a third valve connected to the other end of said second named pipe, a first flexible hose having one end connected to said third valve and having the other end adapted for connection with the upper part of an engine block, a third upstanding output pipe having its lower end connected to said second output pipe intermediate said second and third valves, a fourth valve on the upper end of said third output pipe, a first supply pipe for water under pressure connected to said fourth valve, a check valve in said first supply pipe, a second supply pipe for air under pressure connected to said third output pipe intermediate its lower and upper ends thereof, a fifth valve in said second supply pipe, a second flexible hose having one end adapted for connection to the upper part of a radiator and having the other end connected to said first valve, a return pipe having one end connected to said second output pipe intermediate its ends and having the other end in communication with the interior of said tank, a sixth valve in said return pipe intermediate its ends, a third flexible hose connected to said second output pipe adjacent said third valve, and a seventh valve in said third hose.

CORNELIUS V. BROOKS.

REFERENCES CITED

The following references are of record in the file of this patent:

UNITED STATES PATENTS

Number	Name	Date
1,799,105	Lasko	Mar. 31, 1931
1,836,988	Peck	Dec. 15, 1931
1,983,084	Janus	Dec. 4, 1934
2,023,496	Todd	Dec. 10, 1935
2,187,413	Boezi	Jan. 16, 1940
2,222,516	Powell	Nov. 19, 1940
2,338,586	Keller	Jan. 4, 1944