US 20130248734A1

(19) United States

(12) Patent Application Publication

Berry

(10) Pub. No.: US 2013/0248734 A1

(43) Pub. Date: Sep. 26, 2013

(54) **AIR PURIFICATION SYSTEM**

(71) Applicant: **John Robert Berry**, Coronado, CA (US)

(72) Inventor: **John Robert Berry**, Coronado, CA (US)

(21) Appl. No.: **13/830,158**

(22) Filed: **Mar. 14, 2013**

Related U.S. Application Data

(60) Provisional application No. 61/613,776, filed on Mar. 21, 2012.

Publication Classification

(51) **Int. Cl.**
A61L 9/18 (2006.01)

(52) **U.S. Cl.**
CPC *A61L 9/18* (2013.01)
USPC **250/435**

(57) **ABSTRACT**

This invention relates to an air purification apparatuses and methods for air purification. The air purification apparatuses pass air through energy beams that form one or more fields of energy within a chamber to produce an outflow of sterilized air. In some aspects, a charge generation system is implemented to repel particles from the chamber walls. In some aspects, the fields of energy extend across substantially an entirety of the cross sectional area of the interior volume of the chamber and longitudinally within the chamber. In some aspects, a controller is configured to rotate a beam of collimated light energy within the chamber at a rotational velocity corresponding to at least V/W, wherein V is the linear velocity of a particle within the chamber along the longitudinal axis, and W is the width of the beam of collimated light energy.

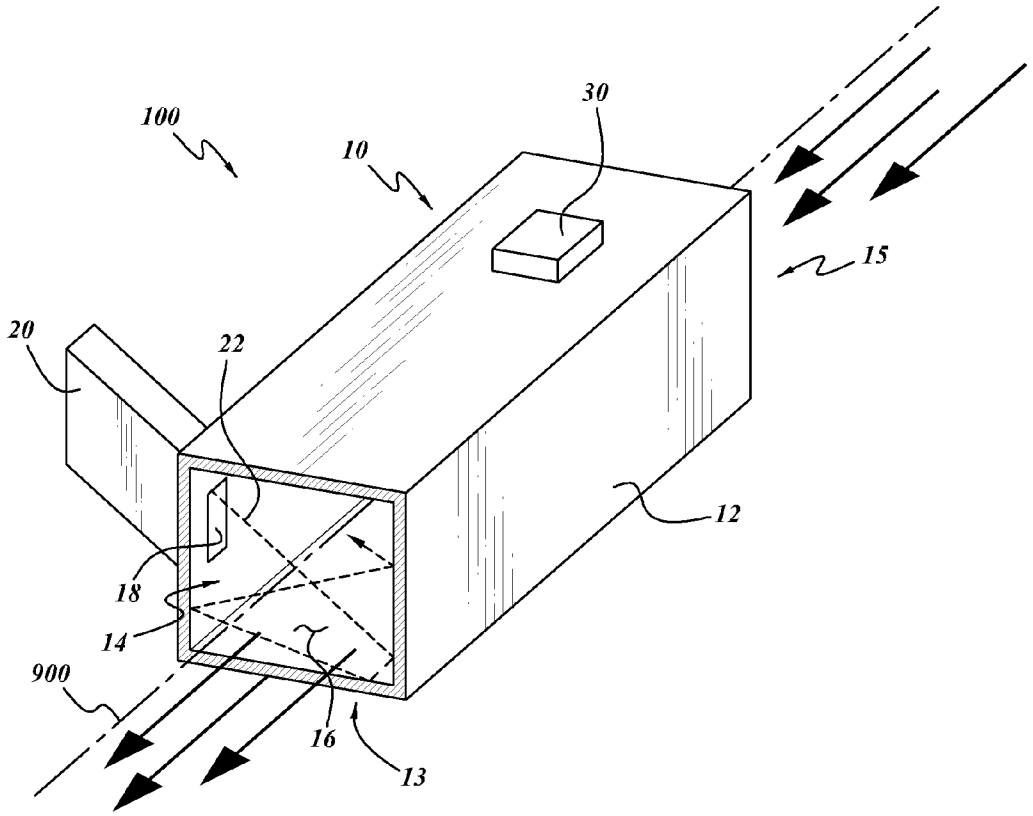

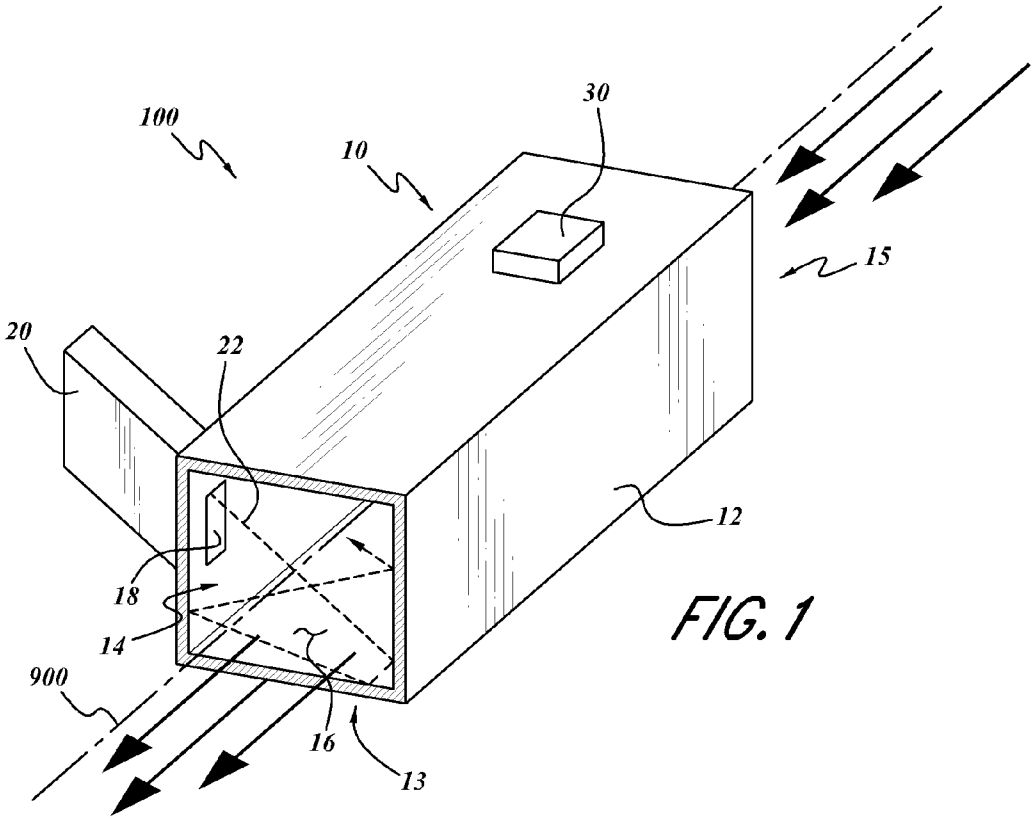
100
10
30
15
20
22
12
18
14
900
16
13

FIG. 1

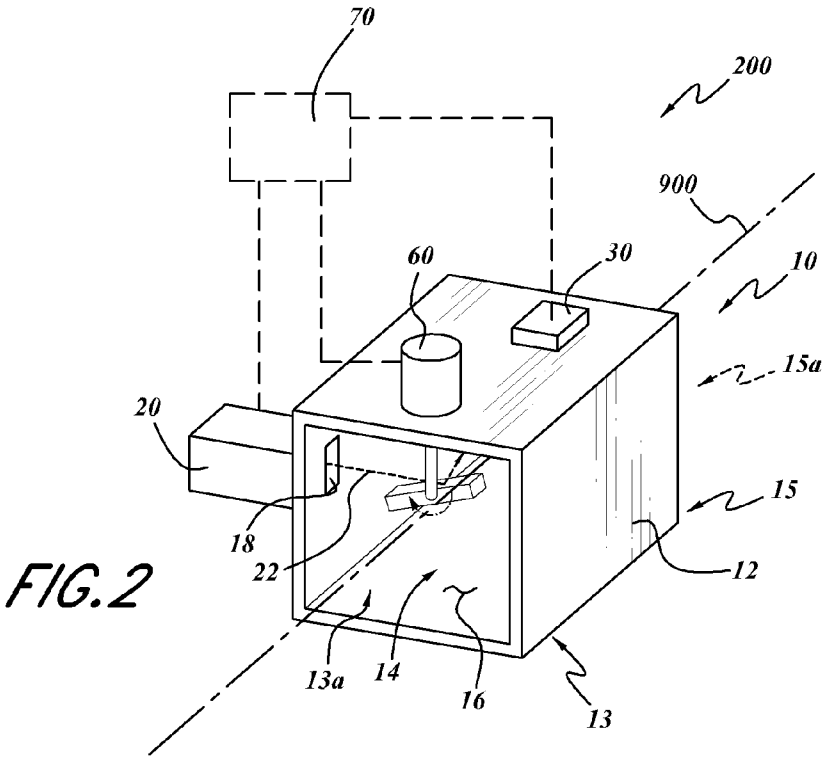
70
200
900
60
30
10
15a
20
15
18
22
12
13a
14
16
13

FIG. 2

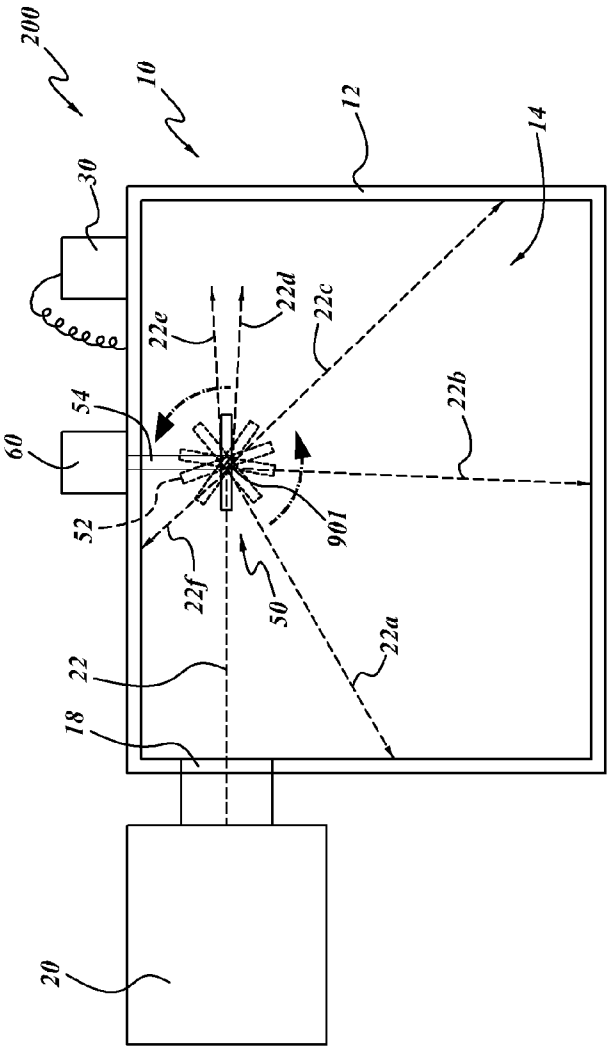
200
10
12
14
30
22e
22d
22c
54
60
22b
52
901
22f
50
22a
22
18
20

FIG. 3A

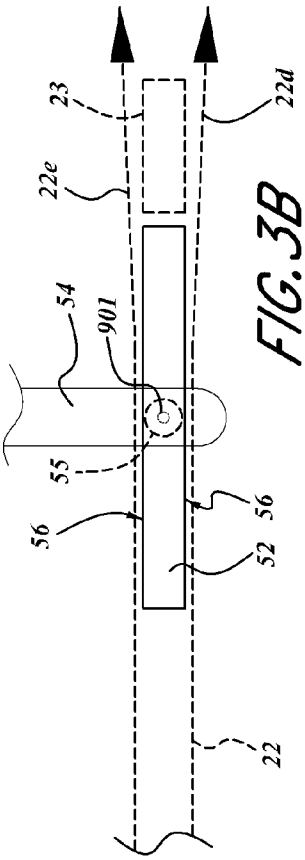
23
22d
22e
54
901
55
56
56
52
22

FIG. 3B

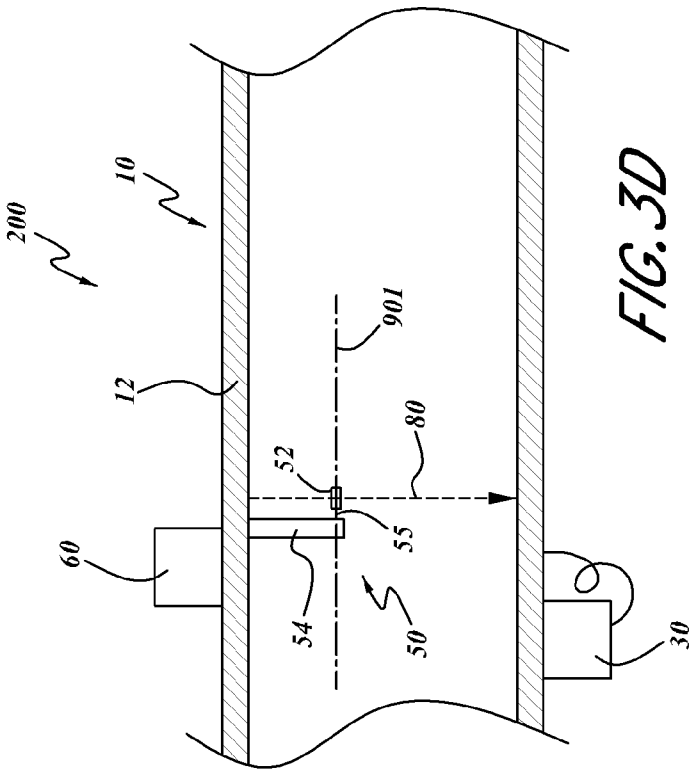
200
10
12
901
80
52
55
60
54
50
30

FIG. 3D

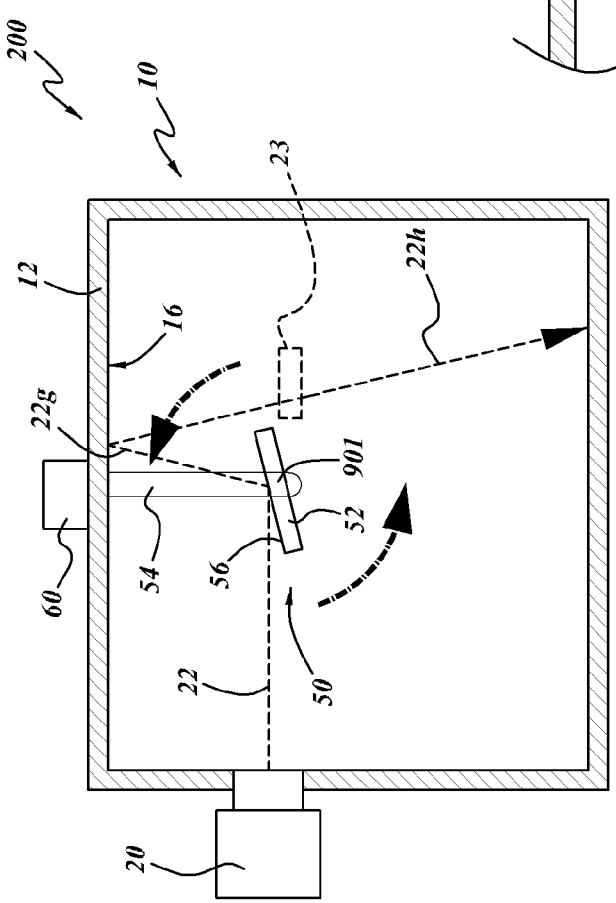
200
10
23
12
16
22h
22g
901
52
60
54
56
22
50
20

FIG. 3C

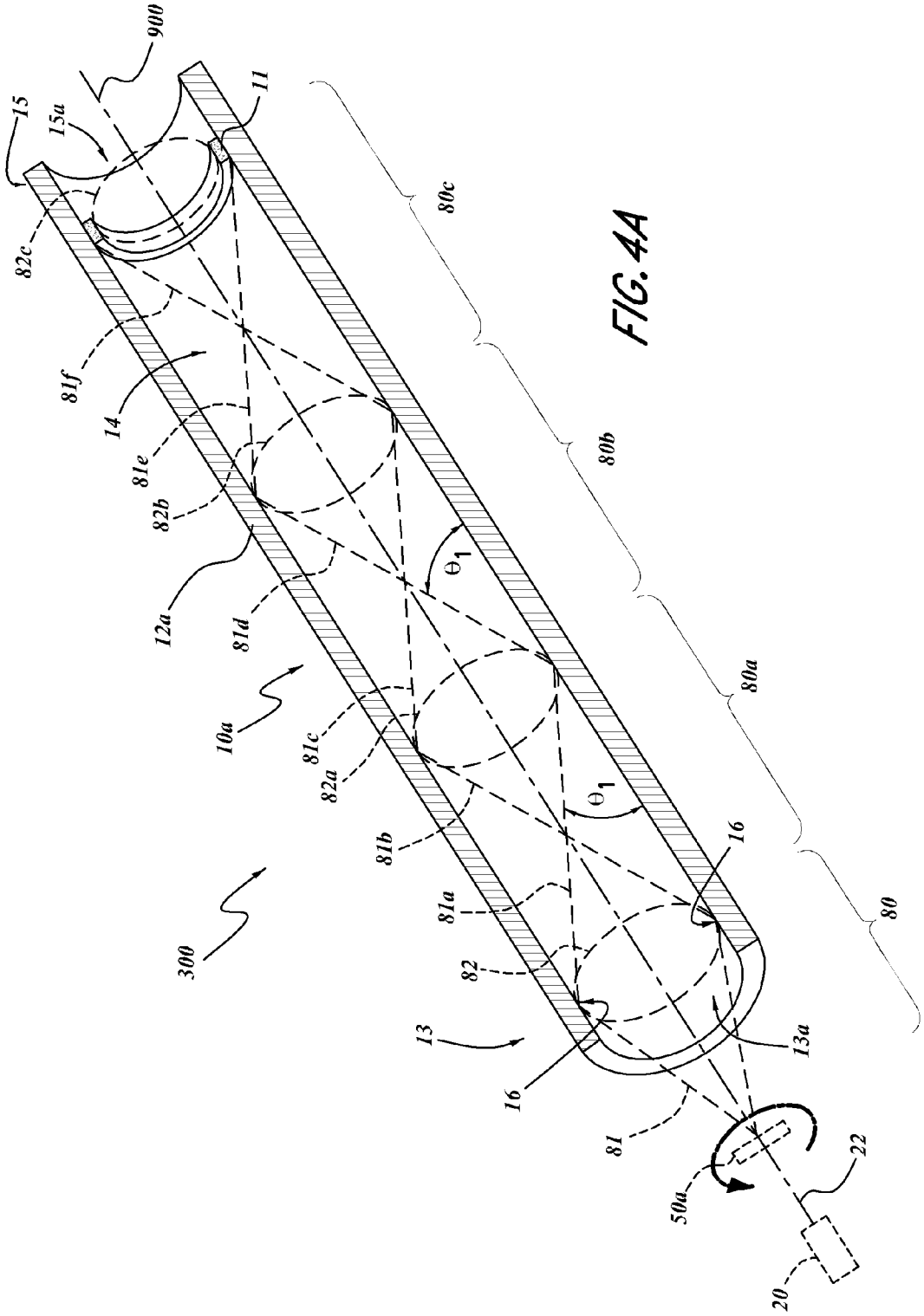
900
15
15a
11
82c
81f
14
81e
82b
12a
81d
10a
81c
82a
81b
81a
82
300
13
16
16
13a
81
50a
22
20
80c
80b
80a
80
Θ_1
Θ_1

FIG. 4A

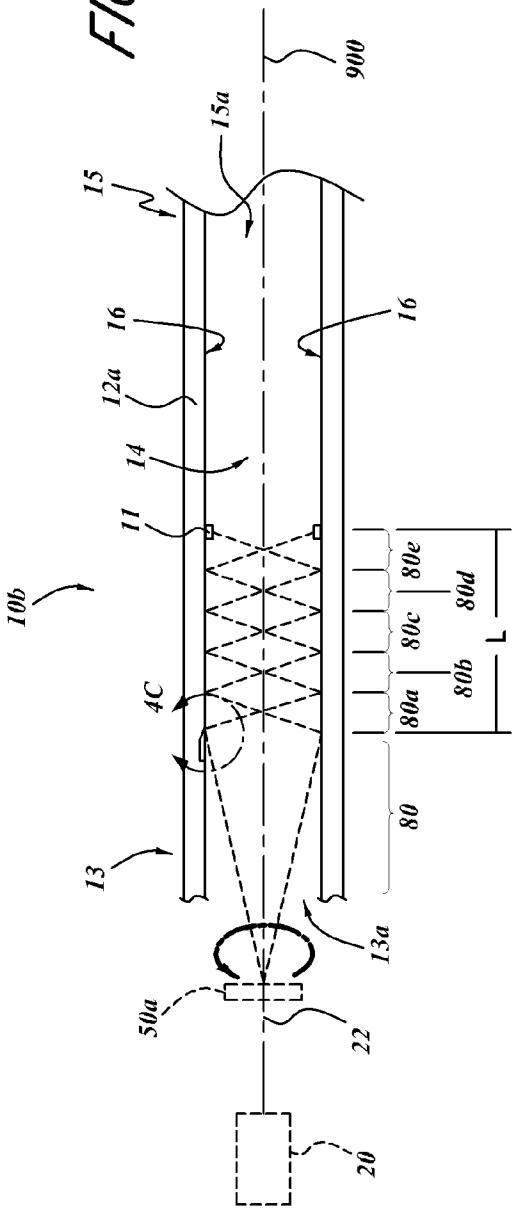
900
15a
15
16
16
12a
14
11
10b
4C
13
80
80a
80b
80c
80d
80e
L
13a
50a
22
20

FIG. 4B

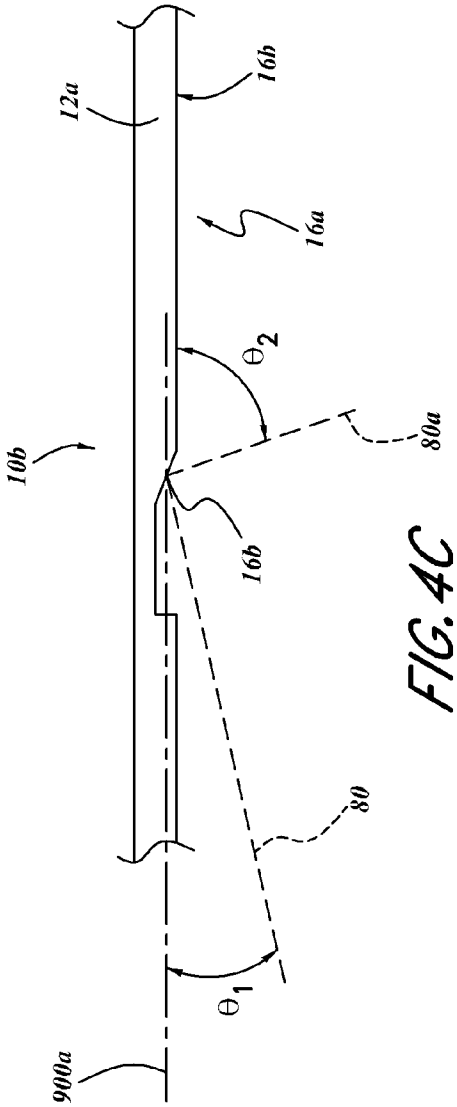
12a
16b
16a
10b
Θ_2
80a
16b
80
Θ_1
900a

FIG. 4C

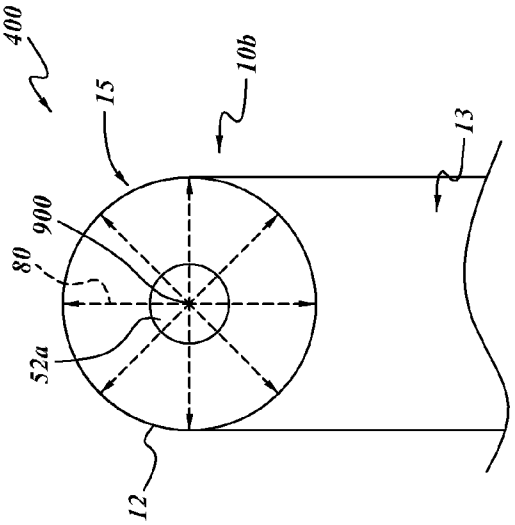
400
15
10b
13
900
80
52a
12

FIG. 5B

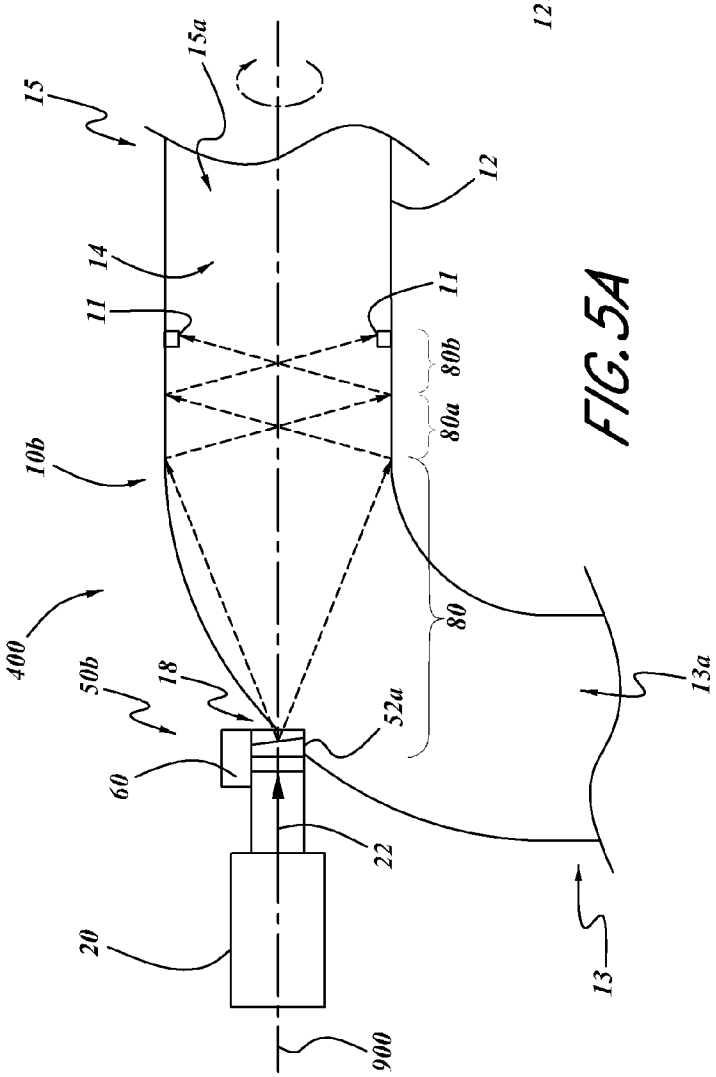
15
15a
12
14
11
11
80b
80a
10b
400
80
50b
18
52a
13a
60
22
20
13
900

FIG. 5A

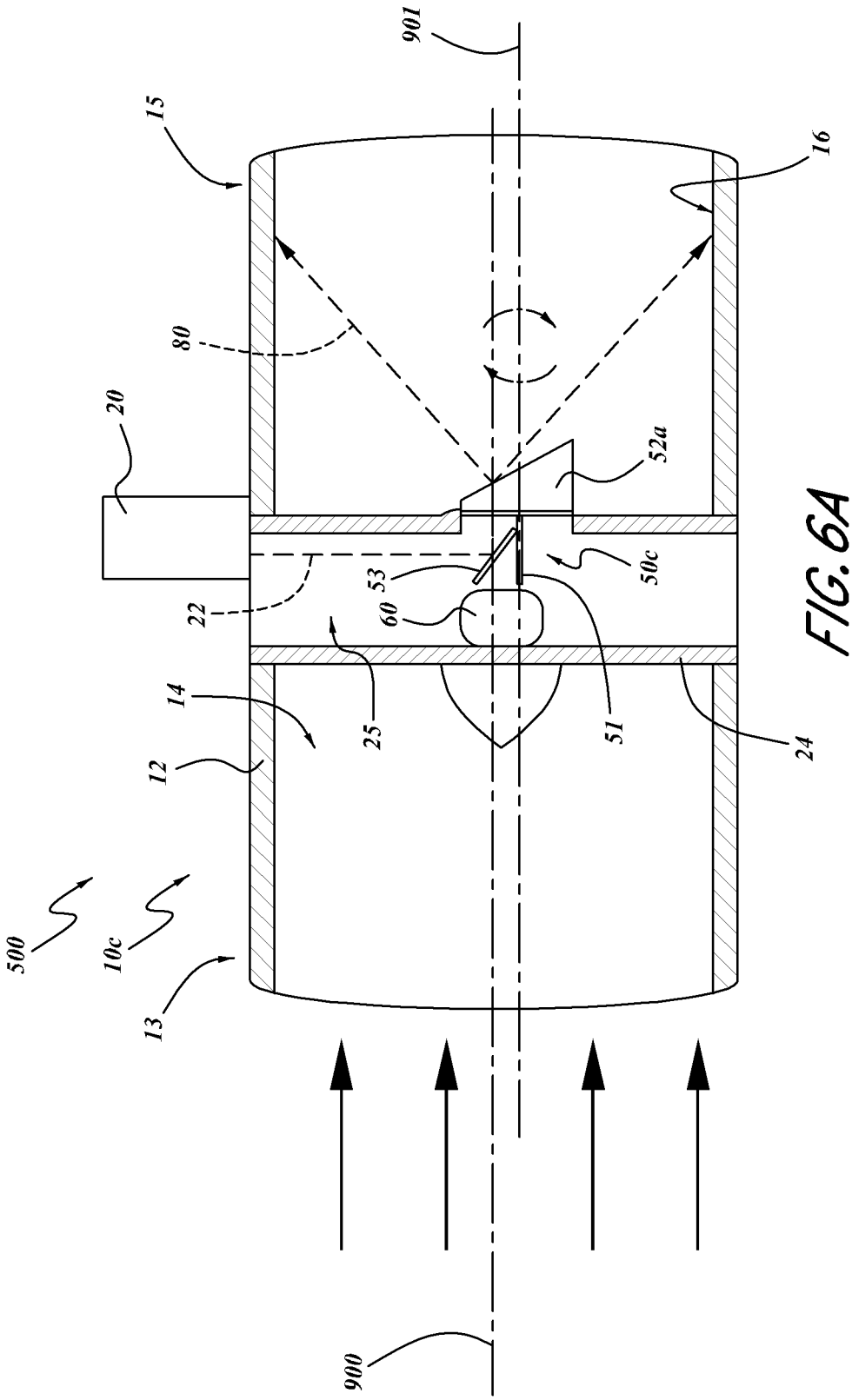

FIG. 6A

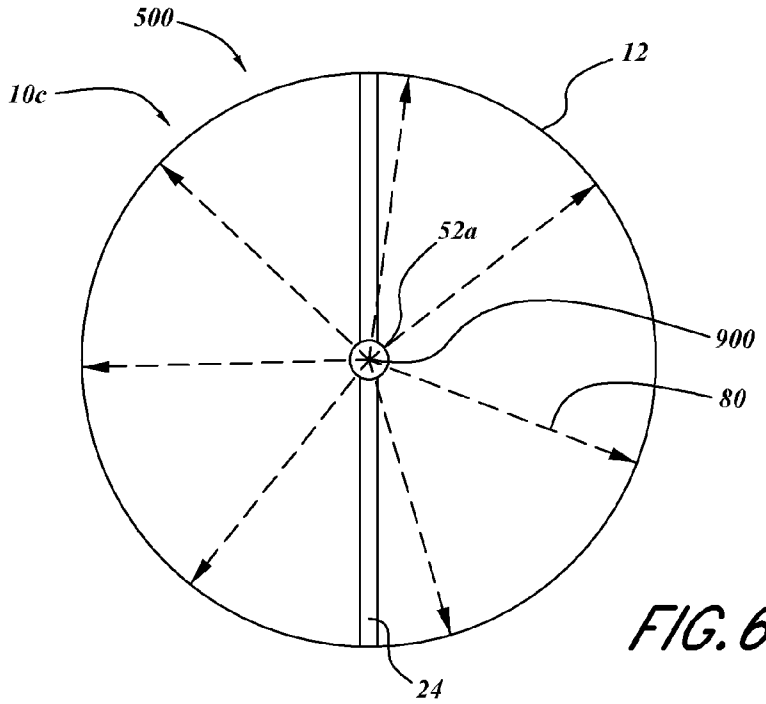

FIG. 6B

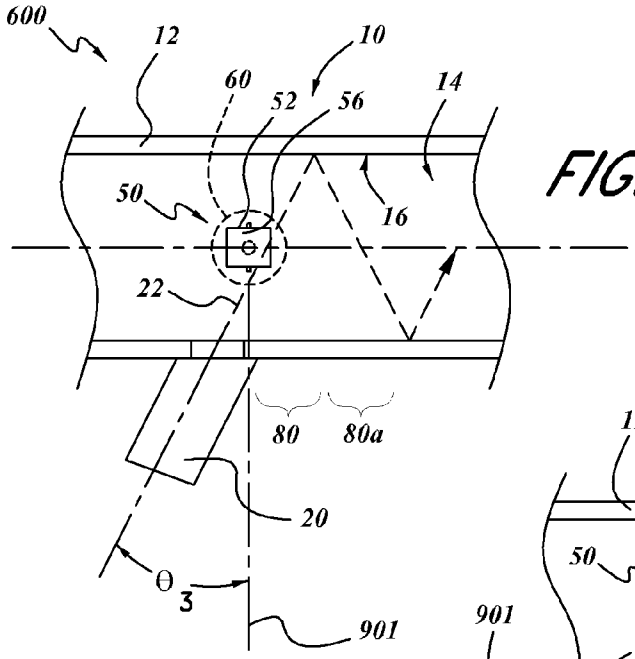

FIG. 7A

FIG. 7B

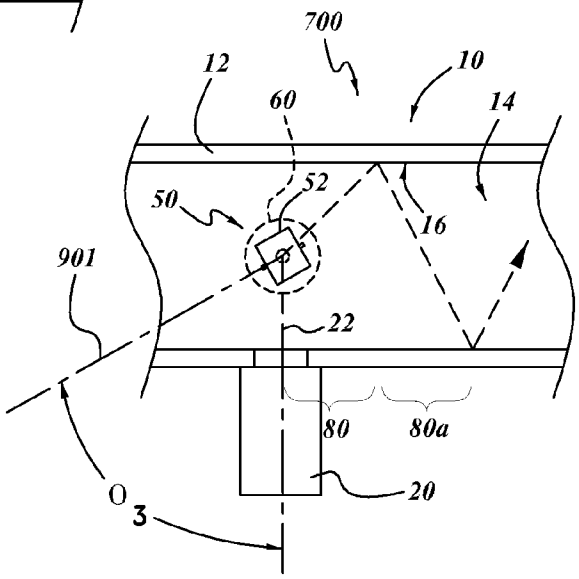

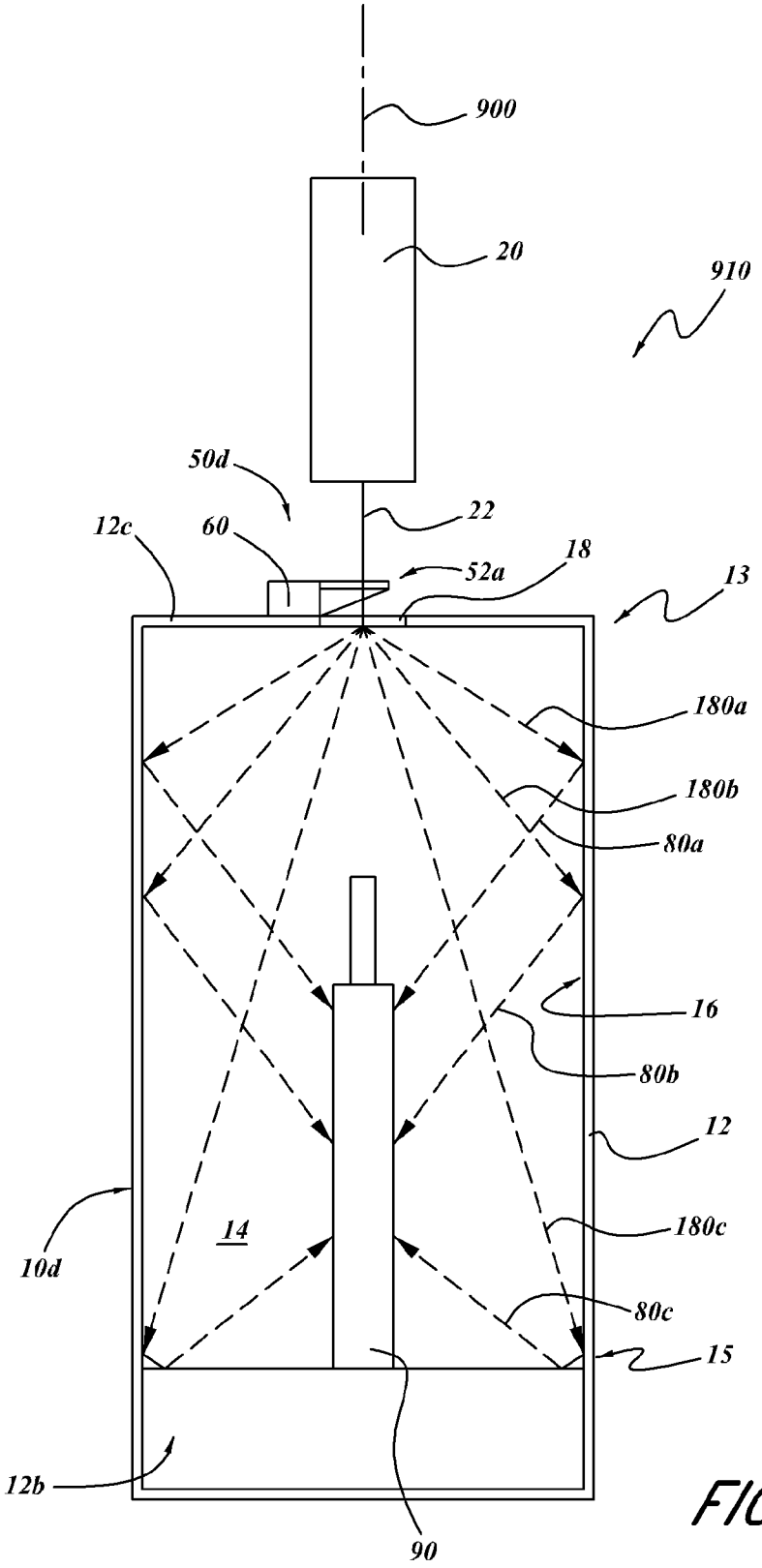
900
20
910
50d
22
12c
60
18
52a
13
180a
180b
80a
16
80b
12
14
180c
10d
80c
15
12b
90

FIG. 8A

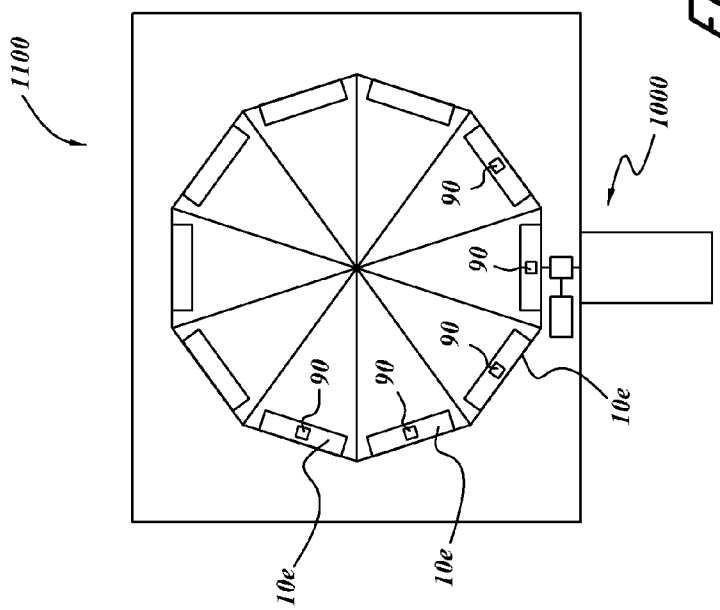
1100
1000
90
90
90
90
90
10e
10e
10e

FIG. 8C

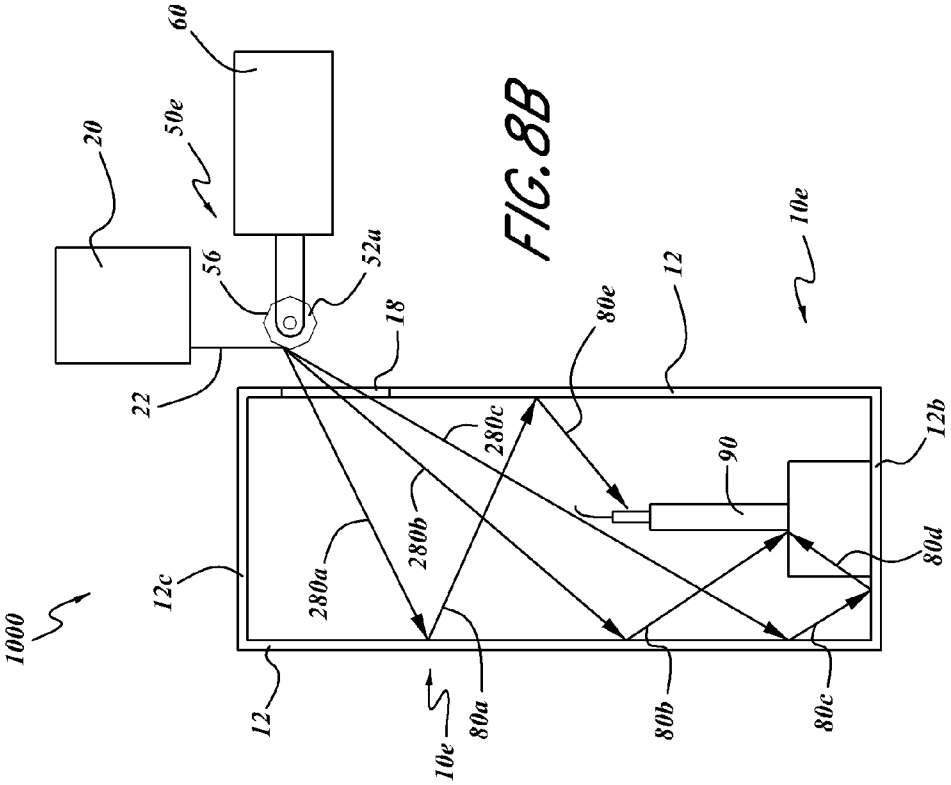
1000
20
50e
60
56
52a
22
18
12
10e
80e
280c
280b
280a
90
12b
80d
12c
12
10e
80a
80b
80c

FIG. 8B

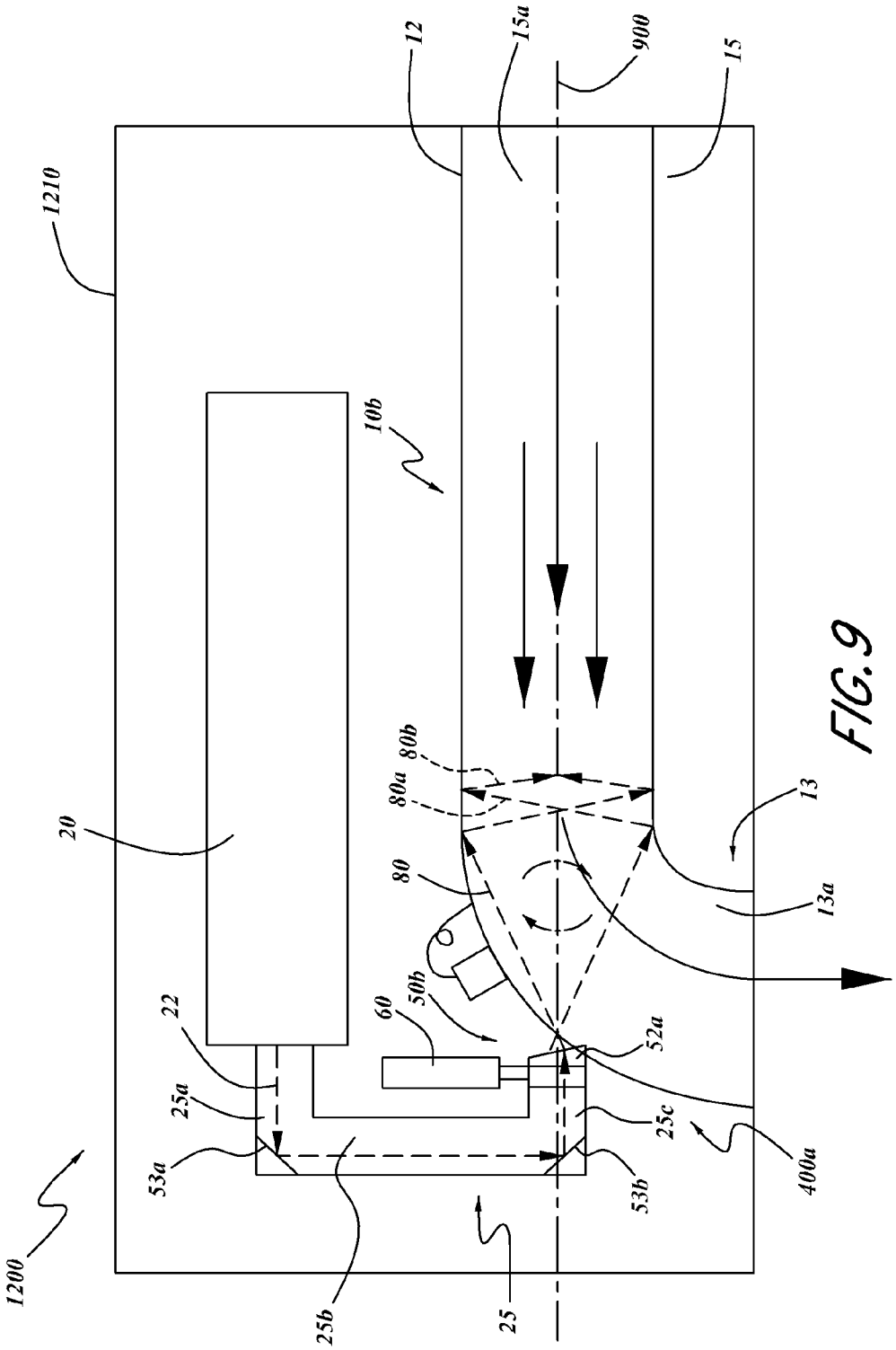
1210
12
15a
900
15
10b
20
80b
80a
80
13
13a
22
60
50b
52a
25a
25c
53a
53b
400a
1200
25b
25

FIG. 9

AIR PURIFICATION SYSTEM

CROSS-REFERENCE TO RELATED APPLICATIONS

[0001] This application claims priority to U.S. Provisional Patent Application No. 61/613,776 filed 21 Mar. 2012 under the same title. This application is also related to U.S. patent application Ser. No. 13/249,035 filed 29 Sep. 2011, now issued U.S. Pat. No. 8,319,195, which is a continuation of U.S. patent application Ser. No. 11/302,179 filed 12 Dec. 2005, which is a continuation-in-part application that claims priority benefit of International Application PCT/US2004/018772 filed on 14 Jun. 2004, designating the United States, which claims priority benefits to U.S. Provisional Patent Application No. 60/478,231, filed 12 Jun. 2003 and U.S. patent application Ser. No. 10/640,477 filed 11 Aug. 2003. The entire disclosures of the aforementioned documents are hereby incorporated herein by reference.

BACKGROUND

[0002] 1. Field

[0003] This application relates generally to an air purification apparatus and methods of air purification.

[0004] 2. Description of the Related Art

[0005] Air circulation and purification systems are directed to the removal of airborne particulates from the air. Airborne particulates comprise a complex mixture of organic and inorganic substances, bacteria, viruses and any other substances that are small enough to become suspended in the air and atmosphere. Exposure to airborne particulates poses dangers to humans and other organisms because particulates may, for example, induce allergic reactions or cause sickness. The respiratory system is the major route of entry for airborne particulates. The deposition of particulates in different parts of the human respiratory system depends on particle size, shape, density, and individual breathing patterns.

[0006] Air circulation systems, for example, air conditioning and heating systems in buildings, aircraft, vessels and vehicles, have been known to circulate airborne viruses and bacteria, which can spread sickness to the occupants. Some air circulation systems in buildings, aircraft, and automobiles use physical filters to trap dust and other particulates. However, physical filters do not to trap small particulates, for example, viruses and spores. Additionally, physical filters can become clogged which in turn decreases air flow, increasing facility costs. Also, the accumulation of particulates on physical filters requires regular cleaning or replacement of the filter, which can interrupt air flow and can be expensive. In some systems, air is purified or sterilized by irradiating the circulating air with ultraviolet lights. One drawback of this method is that dust and particulates collect on the emission source which reduces the intensity of the ultraviolet light. Over time, this collection of particulates reduces the effectiveness of the purification process. Additionally, ultraviolet systems must slow the air to gain more energy to pathogen exposure time to be effective. Slowing the air, as filters also do, significantly increases energy expenses. Therefore, it is desirable to provide a cost effective and efficient means of sterilizing large volumes of air.

[0007] The purification of air and objects has been a common requirement for numerous types of practices and environments. For example, sterilized air and objects are required for hospital surgical rooms. The practice of dentistry usually does not require a sterile environment, but it does require the use of sterile dental tools. The state of the art discloses various devices and methods for achieving these objectives. However, the prior art tool sterilization systems may not provide adequate sterilization, or may have similar limitations as those described above generally for air purification systems.

[0008] Additionally, recent world developments and increased concern over biological weapons and viruses, such as the SARS virus, or *a. niger* spores, has created a need for simple apparatuses that provide a safe haven by destroying biological pathogens as well as aerosols and suspended particulates. Conventional technology is directed primarily towards filtration methods for removing the above-noted micro objects. However, filtration has its limits described above: efficiency, cost, size, etc.

SUMMARY

[0009] The apparatuses, methods and devices of this disclosure each have several innovative aspects, no single one of which is solely responsible for the desirable attributes disclosed herein.

[0010] One innovative aspect of the subject matter described in this disclosure can be implemented in an air purification apparatus. The air purification apparatus includes a chamber comprising one or more walls forming an interior volume, wherein at least one of the walls comprises a reflective surface facing inwardly towards the interior volume. The air purification apparatus includes a collimated light source configured to direct a beam of collimated light energy into the chamber. The air purification apparatus includes a charge generation system configured to impart a charge to the one or more walls, to repel particles contained within the interior volume from the one or more walls.

[0011] Another innovative aspect of the subject matter described in this disclosure can be implemented in an air purification apparatus. The air purification apparatus includes a chamber comprising one or more sidewalls forming an inner cross-sectional area extended longitudinally along a longitudinal axis to form an interior volume. Each sidewall includes an inwardly-facing reflective surface. The air purification apparatus includes a collimated light source configured to direct a beam of collimated light into the chamber. The air purification apparatus includes a beam redirector disposed within the interior volume and configured to rotate through a complete revolution about a rotational axis such that the beam of collimated light energy is redirected to form a field of collimated light energy extending across substantially an entirety of the cross sectional area of the interior volume and extending longitudinally along the longitudinal axis.

[0012] Another innovative aspect of the subject matter described in this disclosure can be implemented in an air purification apparatus. The air purification apparatus includes a chamber. The chamber includes one or more sidewalls forming an interior volume. The one or more sidewalls include one or more surfaces facing inwardly towards the interior volume. The chamber includes a first opening and a second opening configured to allow air to flow through the interior volume from the first opening to the second opening along a longitudinal axis. The air purification apparatus includes a collimated light source configured to direct a beam of collimated light energy into the interior volume of the chamber. The air purification apparatus includes a beam redirector disposed within the interior volume and configured to rotate through a complete revolution about a rotational axis

such that the beam of collimated light energy is redirected to form a field of collimated light energy extending across substantially an entirety of a cross sectional area of the interior volume during said revolution. The air purification apparatus includes includes a controller configured to rotate the beam redirector about the rotational axis at a rotational velocity corresponding to at least V/W, wherein V is the linear velocity of a particle within the chamber along the longitudinal axis, and W is the width of the beam of collimated light energy.

[0013] Details of one or more implementations of the subject matter described in this specification are set forth in the accompanying drawings and the description below. Other features, aspects, and advantages will become apparent from the description, the drawings, and the claims. Note that the relative dimensions of the following figures may not be drawn to scale.

BRIEF DESCRIPTION OF THE DRAWINGS

[0014] FIG. **1** is a front perspective view of an embodiment of an air sterilization apparatus with a cleaning system.

[0015] FIG. **2** is a front perspective view of an embodiment of an air sterilization apparatus with a rotating beam redirector.

[0016] FIG. **3**A is a front view of the air sterilization apparatus of FIG. **2**.

[0017] FIG. **3**B is a detailed view of the rotating beam redirector shown in FIG. **3**A.

[0018] FIG. **3**C is another front view of the air sterilization apparatus shown in FIG. **2**.

[0019] FIG. **3**D is a side cross-sectional view of the air sterilization apparatus shown in FIG. **2**.

[0020] FIG. **4**A is a side perspective cross-sectional view of an embodiment of a chamber with a field of collimated light energy extending across an inner cross sectional area of the chamber and longitudinally within the chamber.

[0021] FIG. **4**B is a side cross-sectional view of an embodiment of a chamber with a portion of a reflective surface that is oriented to be substantially non-parallel with a longitudinal axis extending through the chamber.

[0022] FIG. **4**C is a detailed view of the reflective surface shown in FIG. **4**B.

[0023] FIGS. **5**A and **5**B are side and front views, respectively, of an embodiment of an air sterilization apparatus configured to form a field of energy extending across an inner cross sectional area of the chamber and longitudinally within the chamber.

[0024] FIGS. **6**A and **6**B are side and front cross-sectional views, respectively, of another embodiment of an air sterilization apparatus configured to form a field of energy extending across an inner cross sectional area of the chamber and longitudinally within the chamber.

[0025] FIGS. **7**A and **7**B are top cross-sectional views of other embodiments of an air sterilization apparatus configured to form a field of energy extending across an inner cross sectional area of the chamber and longitudinally within the chamber.

[0026] FIG. **8**A is a side cross-sectional view of an embodiment of an air sterilization apparatus configured to sterilize objects within a chamber.

[0027] FIG. **8**B is a side cross-sectional view of another embodiment of an air sterilization apparatus configured to sterilize objects within a chamber.

[0028] FIG. **8**C is a side cross-sectional view of an embodiment of an air sterilization apparatus that includes a plurality of the sterilization chambers shown in FIG. **8**B.

[0029] FIG. **9** is a side schematic view of another embodiment of an air sterilization apparatus.

[0030] Like reference numbers and designations in the various drawings indicate like elements.

DETAILED DESCRIPTION

[0031] This application is directed to methods and apparatus for purification of air and objects by directing a beam of energy from an energy source into a chamber. Some embodiments use light energy of proscribed frequencies (wavelengths), energy densities and durations. Some embodiments use a cleaning system that repels particles from a wall of the chamber, to allow the particles to be impacted by the beam of energy, and to keep the reflective surfaces, if any, within the chamber clean. Some embodiments include a beam redirector that rotates an energy beam to form a field of collimated light energy extending across a cross sectional area of an interior volume of the chamber and extending longitudinally within the chamber. Some embodiments include a controller configured to rotate a beam redirector within the chamber at a rotational velocity corresponding to at least V/W, wherein V is the linear velocity of a particle within the chamber, and W is the width of the beam of collimated light energy. Each of these embodiments increase the likelihood of particulate within the chamber being impacted, and thus destroyed, by the beam of energy, or the energy field created by sweeping the beam through the chamber. The duration and frequency of the energy exposure to the particulate depends, in part, upon the residency period of objects within the volume, the intensity and/or energy density of the energy, the frequency or frequencies of the energy, the flow of air through the chamber, and other variables that will be described in more detail below.

[0032] Examples of possible particulates suspended in an air flow include bacteria, viruses, toxic gases, toxic molecules, and any other harmful particles. Exposure to a singular energy field within the chamber, or multiple energy fields within the ventilation chamber, destroys and neutralizes spores, bacteria, viruses, protozoa, eukaryotes, other organics, and other particulates. The size of the particulates may vary greatly, however substantially all of the particulates, regardless of their size are irradiated by at least one energy field. In some embodiments, 100% of all the particulates, regardless of size, traveling through the air purification apparatus collide with at least one energy field before exiting the chamber. In other embodiments, 99.8% of all the particulates traveling through the air purification apparatus collide with at least one energy field before exiting the chamber. In yet other embodiments, 99.98% of all the particulates traveling through the air purification apparatus collide with at least one energy field before exiting the chamber. In yet other embodiments, 99.99% of all the particulates traveling through the air purification apparatus collide with at least one energy field before exiting the chamber.

[0033] The air purification apparatuses described herein can be integrated into vehicle platforms such as land vehicles, water craft, underwater craft, and aircraft. For example, the system can be configured to be implemented within surface ships and submarines, for example, during a bio attack on a naval fleet. These vehicle platforms are chosen due to their intrinsically controlled internal environment. Using an air-

craft platform as an example, the air purification apparatus can be placed preferably downstream of any air conditioning packs that may be present on the aircraft, and close to the external air intake(s). The air purification apparatuses can be located in the central recirculation plenum or at a singular exit from that plenum so all returned air is sterilized. Recirculated air in conventional aircraft systems is only HEPA filtered. The chamber inlet end and outlet end are operative coupled to the main air flow such that all air to be delivered to the interior areas of the aircraft, e.g., cabin and cockpit, may pass through the air purification apparatus. Power for the apparatus can be obtained from the aircraft power harness, taking into account obvious requirements for voltage and load matching. Upon activation of the air purification apparatus, all air being delivered to the interior areas of the aircraft may be subjected to purification. Moreover, if intelligently integrated into the aircraft environmental controls, recirculated air can also be subjected to re-purification thereby addressing issues of contamination originating from within the interior areas of the aircraft. Similar integration approaches can be taken with respect to other vehicle platforms.

[0034] In certain embodiments of this series, the air purification apparatus can be portable, e.g., not integrated with or part of a permanent or semi-permanent structure (non-deployable assets). In these embodiments, the apparatus may further comprise an air handler, e.g., a blower having an air displacement element and a motor, and the outlet of the chamber is adapted to fluidly couple with a portable structure such as a container or other transportable rigid structure, or couple with erectable structures such as hazardous materials tents, field medical tents and related medical temporary structures, neonatal care tents, burn recovery tents, and other inflatable tents. Preferably, either type of structure is relatively sealable from an external environment whereby the apparatus provides sterilized air to the interior of the structure and further creates/maintains some level of positive pressure within the structure relative to the environment's atmospheric pressure adjacent to the structure, thus minimizing the undesirable ingress of unconditioned air. The apparatus can be discrete from the structure whereby only a duct or similar air transport conduit is used to operative link the apparatus to the structure, or the apparatus can be integrated with the structure whereby the outlet of the chamber is directly exposed to the interior space of the structure. The optional air handler can be located either upstream or downstream of the apparatus, depending upon design considerations. The air purification systems described herein, such as the portable systems, can be used within the ventilation systems of buildings, vehicles, etc., or can be implemented discretely, for example, to purify a single room or enclosure.

[0035] With respect to portable air purification apparatus, it may be desirable to have the apparatus operate off grid. In these embodiments, the apparatus further comprises a power source. The power source may comprise a power generator utilizing an internal or external combustion engine to provide mechanical energy to a suitable electrical generator, the power source may be a battery (rechargeable or not), or the power source may be a fuel cell. For critical applications such as military or first responder environments, fuel cells provide a convenient and reliable means for providing the necessary power to operate even high power lasers and optionally air handlers.

[0036] FIG. **1** is a front perspective view of an embodiment of an air sterilization apparatus **100** with a cleaning system **30**. Cleaning system **30** can be implemented with any of the air sterilization apparatus described herein. Additionally, "air sterilization apparatus" and "air purification apparatus" are used synonymously herein. Apparatus **100** can include a chamber **10** and a source of energy **20** configured to direct energy into the chamber **10**. The energy directed into the chamber **10** can destroy particles within chamber **10**, such as stationary particles, or particles flowing through chamber **10**.

[0037] Chamber **10** can be linear or curvilinear, and/or can have both linear and curvilinear portions. For example, a first end **15** of the chamber **10** can be perpendicular with respect to a second end **13** of the chamber **10**. The degree of curvature of the chamber **10**, and the angle between first end **15** and second end **13** may cover any possible range. For example, the end **15** to the chamber **10** can be oriented approximately 45 degrees from the second end **13** of the ventilation duct.

[0038] The chamber **10** can comprise one or more sidewalls **12** that form an interior volume **14**. In some embodiments, sidewalls **12** can comprise a sheet metal or other thin material, similar to the ductwork within a ventilation system. However, it will be understood that sidewalls **12** can comprise any structure that forms the interior volume **14**. For example, sidewalls **12** can comprise a portion of a housing, manifold, block, or other structure. For example, sidewalls **12** can comprise a portion of a larger support structure in or on which the other components of chamber **10** are supported or contained.

[0039] The interior volume **14** of chamber **10** can have various cross-sectional shapes, such as the square-shape shown, to form a square duct. The interior volume **14** can have a round cross-sectional shape, to form a cylindrical duct, or any other regular or irregular cross-sectional shape suitable to form an interior volume when extended longitudinally along a longitudinal axis **900**. It will be understood that longitudinal axis **900** follows the general shape of interior volume **14**, and is not necessarily straight. For example, the chamber **10** can form a curvilinear duct, in which the longitudinal axis **900** follows the same curvilinear shape longitudinally within the duct. Generally, the ends **13**, **15** can include openings **13**A, **15**A, configured to attach to a ventilation system and allow air to flow through the interior volume **14** along the longitudinal axis **900**, such that chamber **10** forms a portion of a ventilation duct. However, in some embodiments, the chamber **10** can be a substantially closed chamber, wherein ends **13**, **15** include additional sidewalls to cover openings **13**A, **15**A. For example, chamber **10** can be configured to be used as a sterilization apparatus for medical equipment.

[0040] The energy source **20** can comprise a collimated light source, such as a laser or other source of non-ionizing collimated electromagnetic radiation capable of directing a beam of collimated light energy **22** towards a target volume, and irradiating the volume. The energy source **20** can comprise any other type of energy source capable of directing a beam of energy into a volume, having a power output sufficient for achieving the intended purpose of the apparatus and methods. Energy source **20** can provide a beam of sufficient strength to destroy or neutralize one or more of dust particles, pollen, pathogens, allergens, gasses, or other particulates that are present in the flow of air through the system. The energy source **20** may be of the continuous wave or pulsed type, with many embodiments employing a pulsed type for reasons well known to those skilled in the art. Depending upon the energy density for a given application, a 10 watt CO_2 laser emitting radiation in the infrared region may be sufficient and higher power and/or additional lasers may be employed. In some

embodiments a 15 watt laser is used, and in still other embodiments a 60 watt laser is used. In an embodiment, the wavelength of the laser or energy of the emitted beam(s) is selected based upon the target species identified for neutralization. For example, in some embodiments a wavelength ranging between approximately 1056 and 1064 microns (μm) provided benefits in neutralizing certain species, such as spores of *Aspergillus niger*.

[0041] The energy source **20** can be positioned outside the chamber **10**, and the beam **22** can be directed through one or more openings **18** extending through sidewall **12**. The opening **18** can include a transparent optical window or other structure to prevent contamination into chamber **10** through opening **18**. The optical window may or may not be used to redirect at least on beam through sidewall **12**. The optical window may be placed along any portion of the chamber **10**. One having skill in the art may vary the placement of the optical window to optimize exposure of the energy field to the inside of the chamber **10**.

[0042] The optical window may be constructed out of any suitable material known to those having skill in the art. In an embodiment, the optical window comprises a material that allows at least one beam **22** of energy to pass from the outside of the chamber **10** to the inside of the chamber **10**. In another embodiment, the optical window comprises a material that allows for substantially all of the collimated light energy to pass through the outside of the optical window and into the chamber.

[0043] At least one of sidewalls **12** can include a reflective surface **16**, to reflect the beam **22** within chamber **10**. In some embodiments, each of sidewalls **12** includes a reflective surface **16**, to repeatedly reflect and redirect the beam **22** within chamber **10**. Other embodiments described herein provide additional ways to further reflect and redirect the beam **22** within chamber **10**.

[0044] Surface **16** may be curvilinear, rectilinear or any combination thereof. Furthermore, a portion or the entire interior surface **16** may have various characteristics including highly reflective properties, surface undulations (linear or curvilinear) or features to assist in beam scattering or intended beam redirection. Moreover, the interior surface may be rigid or flexible. If flexible, the surface may be acted upon by a force (mechanical, electrical or pneumatic) to cause deflection thereof. In certain embodiments, the deflection is cyclical and characterized as a vibration.

[0045] The reflective surface **16** can be any layer, coating, or other structure suitable to reflect an energy beam such as a collimated light source. For example, the reflective surface **16** can comprise a reflective metal, such as gold, aluminum, silver, or nickel, reflective polymers, or other suitably reflective materials. The one or more reflective inner walls of the chamber **10** can reflect the beam **22** so that air passing through the chamber **10** passes through multiple beams or fields of energy. One having skill in the art may increase or decrease the length of the chamber **10** to increase or decrease the number of fields or beams through which air must pass before exiting the chamber **10**.

[0046] Cleaning system **30** can be configured to repel particles contained within the inner volume **14** from the sidewalls **12**, to prevent particles from settling on and accumulating on sidewalls **12**. Particles that settle on sidewalls **12** may provide a focal point for beam **22** on reflective surface **16**, causing overheating and decreasing the reflective functionality of surface **16**. In some situations, particle accumulation on sidewall **12** may cause beam **22** to burn a hole through sidewall **12**, causing system contamination. To repel particles from the sidewalls **12**, cleaning system **30** can comprise a charge generation system configured to impart a charge on one or more of sidewalls **12**, for example, to surface **16**. The charge can be provided at a similar polarity as the particles within chamber **10**. For example, it has been observed that particles flowing within a ventilation system may naturally form a charge, such as a negative charge. Thus, charge generation system **30** can employ a similar charge to sidewalls **12** as the particles, such as a negative charge, to repel the particles as described. In some embodiments, a charge generation system can be employed to actively charge the particles, in addition to the aforementioned natural charge that may be formed. For example, a screen, nodes, or other structure can be extended across or from the interior of chamber **10**, and the screen or nodes can be charged with another charge generation system, to impart the same charge to particles passing through the screen or node field, prior to contacting and being destroyed by beam **22**. Such active charge to the particles can further prevent particle accumulation on sidewalls **12** when sidewalls **12** are similarly charged by charge generation system **30**. Charge generation system **30** can comprise any suitable power source, such as battery, electrode, or other related electronic components, capable of placing a charge on sidewalls **12**. Cleaning system **30** is very different from conventional ventilation cleaning systems, in which the goal was to attract particles to a device mounted on a sidewall, such as a filter or adhesive, etc., rather than repelling them, and allowing them to continue to flow within the ductwork being decontaminated. The sidewall charge may be provided by redirected waste thermal energy formed within apparatus **100**, or within a system within which apparatus **100** is implemented.

[0047] FIG. **2** is a front perspective view of an embodiment of an air sterilization apparatus **200** with a rotating beam redirector **50**. FIG. **3**A is a front view of the air sterilization apparatus **200** of FIG. **2**. FIG. **3**B is a detailed view of the rotating beam redirector **200** shown in FIG. **3**A. FIG. **3**C is another front view of the air sterilization apparatus **200** shown in FIG. **2**. FIG. **3**D is a side cross-sectional view of the air sterilization apparatus **200** shown in FIG. **2**.

[0048] Referring to FIGS. **2**-**3**D, beam redirector **50** can comprise an optical element **52** configured to rotate about a rotating axis **901**. The optical element **52** can rotate through a complete revolution about the axis **901**, and in some embodiments, through multiple complete revolutions. Such rotation can be provided, for example, through a motor **60**, a motor shaft **54**, and an optical element shaft **55**. Any other structure suitable to impart rotational motion on beam redirector **50** about axis **901** can be implemented, such as other rotational actuators and the like. Optical element **52** can comprise any suitable structure configured to redirect the beam **22** within volume **14** of chamber **10**, such as one or more suitably reflective (e.g., planar) surfaces **56**. In some embodiments, optical element **52** can comprise other reflective, refractive, transmissive, or other structures, that can redirect a beam of light energy. In some embodiments, optical element **52** can redirect a beam of light energy by dispersing (e.g., bisecting) a single beam, such as a laser beam, into two or more beams. In some embodiments, optical element **52** can change the direction of a beam of light energy by changing the wave velocity of the beam.

[0049] The rotation of optical element **52** can allow beam **22** to be redirected at various incident angles within chamber **10**, as illustrated schematically by the beams **22**A-**22**F in FIG. **3**A. Through said rotation, optical element **52** can reflect and sweep beam **22** around the inner perimeter of chamber **10**, and form a field of energy **80** (FIG. **3**D) that extends across the cross sectional area of the interior volume **14**. The energy field **80** will increase the likelihood of contact between particulate matter traveling through chamber **10** and the energy within chamber **10** provided by energy source **20**, thus increasing the sterilization effects within chamber. The field **80** can extend at an angle that is substantially orthogonal relative to the axis **900**, or can be at an angle thereto. In some embodiments, the field **80** can comprise an approximately two-dimensional shape, for example, when the beams **22**A-**22**F, and the other reflective beams forming the field **80**, are co-planar. The embodiments of apparatus **200** shown in FIGS. **2**-**3**D can produce a field of energy **80** that is approximately two-dimensional. Alternatively, the field can comprise a three-dimensional shape, when it comprises a plurality of reflective beams that also extend longitudinally along axis **900**, as described further below.

[0050] In use, air enters the chamber **10** through the opening **13**A, and passes through energy field **80**. As the air passes through energy field **80**, any particles suspended in the air, are irradiated. Energy field **80** is generally of sufficient strength to neutralize the particulates. Once the air exits the chamber **10** through the opening **15**A, the air is substantially sterile.

[0051] Referring to FIG. **3**B, a vortex **23** can be formed within a portion of volume **14** in which the field of energy **80** formed by the reflected and rotated beam **22** may not reach. For example, vortex **23** can be formed within portions of volume **14** that are positioned behind optical element **52** relative to the collimated light source **20**. Thus, particles longitudinally moving through chamber **10** may not be contacted within vortex **23** by beam **22**, and thus, may not be destroyed, by beam **22**. The width shown of beam **22** in FIG. **3**B is for illustrative purposes only, and to demonstrate how vortex **23** can be formed.

[0052] Referring to FIG. **3**C, to increase the likelihood of contact between a reflection of beam **22** and a particulate within vortex **23**, at least one sidewall **12** of chamber **10** can include the reflective surface **16**. In such an embodiment, beam **22** can initially be redirected by beam redirector **50** towards surface **16**, as depicted by beam **22**G, and then reflected on the sidewall surface **16**, to form beam **22**H. Beam **22**H can cross vortex **23**, and thus can increase the likelihood of contact between beam **22** and particulate within vortex **23**. As such, a field of energy **80** can extend across substantially an entirety of the cross sectional area of the interior volume **14**, and contact (and destroy) an increased percentage of particles passing therethrough. Vortex **23** can be crossed and impacted by the energy beam when the field of energy is reflected longitudinally down the chamber, as described further herein, and shown in the embodiments of FIGS. **4**A-**7**B.

[0053] Referring again to FIG. **2**, a controller **70** can be employed to control various parameters of the energy source **20**, motor **60** (or other rotational device), and cleaning system **30**. Controller **70** may control the polarity, frequency, amplitude, or other parameters of the charge imparted by cleaning system **30** to portions of the chamber **10**. Controller **70** can control the flow velocity of the air through the chamber **10**, through control of air flow devices, such as fans, pumps, valves, or other devices. Controller **70** may control various characteristics of the energy source **20**, such as the amplitude, frequency, wavelength, width (e.g., diameter), or other characteristics. Controller **70** may pulse or otherwise vary when beam **22** is emitted from the energy source **20**. For example, to prevent errant reflection, controller **70** may interfaces with energy source **20** to switch it on and off in synchronicity with the operation of beam redirector **50**. Controller **70** can comprise a personal computer, or any other hardware, firmware, software, and the like suitable to control a system such as apparatus **100**.

[0054] In some embodiments, controller **70** may control the speed of the rotation of the beam redirector **50**. For example, controller **70** may control the speed of rotation of the beam redirector **50** based upon the linear speed of a particle within the chamber **10**, and the width of the beam **22**, to increase the likelihood that the beam **22** would contact (e.g., destroy) the particle within the field of energy created during a single rotation of the beam redirector. As such, controller **70** can be configured to rotate configured to rotate the beam redirector **50** about the rotational axis **901** at a rotational velocity ω corresponding to V/W, wherein V is the linear velocity of a particle within the chamber along the longitudinal axis **900**, and W is the width (e.g., diameter) of the beam of collimated light energy. Examples 1 and 2 below provide further details on this relationship and method of controlling beam redirector **50** with controller **70**. Controller **70** can be employed within any of the air purification apparatuses described herein.

[0055] FIG. **4**A is a side perspective cross-sectional view of another embodiment of an air sterilization apparatus **300** with a field of energy **80** extending across an inner cross sectional area of a chamber **10**A and longitudinally within the chamber **10**A.

[0056] Chamber **10**A can be similar to chamber **10** in FIGS. **1**-**3**D, and is shown with a cylindrical sidewall **12**A for illustrative purposes only; chamber **10**A and sidewall **12**A can comprise other shapes. Sidewall **12**A can include the reflective surface **16**. A laser **20** and beam redirector **50**A are shown schematically; beam redirector **50**A can be similar to beam redirector **50** or the other beam redirectors described herein. Beam redirector **50**A can be configured to redirect beam **22** from laser **20** to form an energy field **80**. Energy field **80** can be similar to that formed by beam redirector **50** and redirected beams **22**A-**22**H in FIGS. **2**-**3**D. In this embodiment, the beam redirector **50**A can be configured to direct beam **22** both radially outwardly and longitudinally with respect to axis **900**, such that energy field **80** is a three dimensional energy field. For example, energy field **80** can comprise a first portion **81** that extends both radially outwardly and longitudinally with respect to axis **900**, until forming a second portion **82** that contacts and forms a perimeter along an inner surface of sidewall **12**A. A three-dimensional energy field with a controlled shape such as energy field **80** can increase the likelihood that any particulate traveling through volume **14** will be contacted by a portion of the energy beam **20** that forms field **80**. The three-dimensional energy field can comprise a number of different shapes, depending on the configuration of the chamber, its sidewalls, and the beam director. In the illustrated embodiment, energy field **80** is approximately frustroconically shaped.

[0057] In embodiments with reflective surface **16**, energy field **80** can then be reflected off reflective surface **16** and repeated, radially and longitudinally along axis **900** down the interior volume **14** of chamber **10**A, to form one or more

additional reflected energy fields **80**A, **80**B, **80**C. The reflective angle of the beams impacting and reflecting from surface **16** are shown as angle θ_1. Such repeated, reflected, three-dimensional energy fields further increase the likelihood that any particulate traveling through volume **14** will be contacted by a portion of the energy beam **20** that forms fields **80**A, **80**B, **80**C, etc. Additionally, any particulate that is not destroyed through an initial contact with energy field **80**, will have an increased likelihood of subsequently being destroyed by one of the subsequent, reflected energy fields. In some embodiments, the length of the chamber is adjusted so that air flowing through the chamber passes through five different fields of light energy before exiting the chamber. In another embodiment, the length of the chamber is adjusted so that air flowing through the chamber passes through four different fields of light energy before exiting the chamber. In another embodiment, the length of the chamber is adjusted so that air flowing through the chamber passes through three different fields of light energy before exiting the chamber. In another embodiment, the length of the chamber is adjusted so that air flowing through the chamber passes through two different fields of light energy before exiting the chamber. In another embodiments, as many as 19 different fields of light energy can be reflected within the chamber, and more or less fields are within the scope of the invention.

[0058] Embodiments of the air ventilation systems described herein can include an energy abatement device positioned within the chamber to limit the travel of the energy beams or fields produced by the energy source within the chamber. For example, the energy abatement device can prevent a portion of the energy field from exiting the chamber of the air ventilation system and traveling within the ventilation system to which the chamber is attached. Any suitable material known to one having skill in the art as being capable of absorbing beam energy may be used for the energy abatement device, and/or the energy abatement device may be located along any portion of an interior of the chamber.

[0059] An example of an energy abatement device **11** is illustrated in FIG. **4**A. Energy abatement device **11** can form an annular ring-like shape that extends around an inner perimeter or circumference of sidewall **12**A. Other shapes can be used, depending on the shape of the chamber. One or more energy abatement devices can be employed, and the devices can be positioned at various locations within the chamber. For example, one or more energy abatement devices can be located at or near either or both of ends **13**, **15**. In some embodiments, the energy abatement device can be fitted with one or more heat sinks. Any suitable heat sink known to those having skill in the art may be used. The heat sink may be further connected to device that further dissipates or redirects the heat energy absorbed by the heat sink. It will be understood that energy abatement device **11**, or other suitable devices, can be employed within any of the chambers and air purification apparatuses described herein.

[0060] In some embodiments, one or more light baffles can be extended across the inner volume of the chambers described herein. The baffles can permit air flow thereby but occlude any direct or indirect beam from exiting the chamber. The baffles can be constructed from any suitable material that absorbs and/or reflects beam energy. If the baffles absorb the energy, it may also be desirable to include means for cooling the baffles if the air flow rate is insufficient for the task. Examples of embodiments of light baffles that can be implemented within the air purification apparatuses described herein are disclosed in U.S. Pat. No. 8,319,195, entitled "Methods and Apparatus for Sterilization of Air and Objects" and issued Nov. 27, 2012, the entire contents of which are incorporated herein by reference.

[0061] In some embodiments of the air purification apparatuses described herein, a safety mechanism can be employed to disable energy source **20**, and prevent injury, such as retina damage to a person. For example, a shock (e.g., earthquake) sensor can be connected to energy source **20** (or its related controller) that deactivates energy source **20** in the event that it is subjected to shock above a threshold. A secure light box or similar device can be employed to prevent tampering with the airflow apparatuses described herein, and accidental exposure to energy emitted from energy source **20**.

[0062] FIG. **4**B is a side cross-sectional view of an embodiment of a chamber **10**B with a portion of the reflective surface that is oriented to be substantially non-parallel with a longitudinal axis extending through the chamber **10**B. FIG. **4**C is a detailed view of the reflective surface shown in FIG. **4**B.

[0063] Referring to FIG. **4**C, the reflective surface **16** can include a first portion **16**A that extends generally along and parallel with a longitudinal axis **900**A. The longitudinal axis **900**A extends approximately longitudinally within chamber **10**B, similar to axis **900** (FIG. **4**B), but is shown radially offset from the center of volume **14**.

[0064] The reflective surface **16** can include a second portion **16**B oriented to be substantially non-parallel with the longitudinal axis **900**A. The depth, width, angle, or number of reflective portions **16**B may be adjusted to redirect the path of the fields of energy **80** within chamber **10**B. For example, portion **16**B can allow the entry angle θ_1 of energy field **80**, defined as the angle between energy field **80** and axis **900**A, can be less than the exit angle θ_2 of energy field **80**, defined as the angle between the reflected energy field **80**A and axis **900**A. Such reduction between angle θ_1 and θ_2 can decrease the total length L consumed by the repeated, reflected energy fields within chamber **10**B, and thus decreasing the size of air sterilization apparatus within which chamber **10**B is implemented.

[0065] The second portion **16**B can have any of a number of different configurations. For example, the second portion **16**B can extend around some, or substantially the entirety of an inner perimeter of chamber **10**B. Second portion **16**B can protrude from, or can be recessed with respect to first portion **16**A of reflective surface **16**. A recessed portion **16**B can reduce flow restrictions within chamber **10**B. In some embodiments, second portion **16**B comprises a groove that is recessed within reflective surface **16**. It will be understood that the second portion **16**B can be implemented within other chambers and other air purification apparatuses described herein.

[0066] In some embodiments, both the length of the chamber and the depth, width, and number of angled reflective portions are configured so that air passing through the ventilation chamber must pass through at least five, four, three, or two fields of energy before exiting the ventilation chamber.

[0067] It will be understood that both the two and three dimensional energy fields described herein can be formed within various shapes and sizes of chambers, at various orientations within the chambers, and can be formed with various embodiments of beam redirectors. Additional embodiments of air sterilization apparatus that can form energy fields are shown in FIGS. **5**A-**10**C.

[0068] FIGS. **5**A and **5**B are side and front views, respectively, of an embodiment of an air sterilization apparatus **400** configured to form a three-dimensional field of energy **80** extending across an inner cross sectional area of a chamber **10**B and longitudinally within the chamber **10**B. Apparatus **400** comprises a beam redirector **50**B configured to form energy field **80** within chamber **10**B. Beam redirector **50**B can comprise an optical element **52**A configured to rotate about an axis, similar to optical element **52** in FIGS. **2**-**3**D. Element **52**A can rotate about a rotating axis that is approximately collinear with axis **900**, or offset from axis **900**. Optical element **52**A can be configured to redirect beam **22** from energy source **20** similar to, and can be similarly configured as optical element **52** (FIGS. **2**-**3**D). In some embodiments, optical element **52**A can implement a lens that redirects the beam **22** through refraction instead of or in addition to reflection. The resulting shape of field **80** can be similar as those other embodiments described herein. Ends **13** and **15** of chamber **10**B can be oriented at an angle with respect to each other, such that chamber **10**B forms an elbow. Beam redirector **50**B can positioned within the elbow, and can be positioned internally within chamber **10**B (within volume **14**) or externally to chamber **10**B.

[0069] FIGS. **6**A and **6**B are side and front cross-sectional views, respectively, of another embodiment of an air sterilization apparatus **500** configured to form a three-dimensional field of energy **80** extending across an inner cross sectional area of a chamber **10**C and longitudinally within the chamber **10**C. Apparatus **500** can include a beam redirector **50**C and refractive optical element **52**A, similar to beam redirector **50**B and optical element **52**A shown in FIGS. **5**A and **5**B. In this embodiment, the beam redirector **50**C can be mounted within volume **14**, and can be positioned within bent portion of chamber **10**C, such as an elbow, or within a substantially straight portion of chamber **10**C. A support member **24** can extend from sidewall **12** into chamber volume **14** to provide support to beam redirector **50**C. Support member **24** can include an inner channel **25** through which the energy beam **22** can be directed from energy source **20**. The energy beam **22** can be directed through optical element **52**A by directing beam **22** in a first direction (e.g., downwardly as shown) from energy source **20**, and then reflected off a reflective element **53** in a second direction (e.g., horizontally as shown) through optical element **52**A. Optical element **52**A can be rotated about rotational axis **901** to form energy field **80**. Optical element **52**A can be rotated by a motor **60** and driveshaft **51** mounted on support member **24**, or through other suitable rotational devices and components. Support member **24** can extend from a single side **12** of chamber **10**C, or can extend from a first side to a second side, to provide additional support and stability to components mounted thereon. An aerodynamic element **26** can be provided on a portion or all of the upstream and/or downstream side of support member **24**, to reduce the drag on the air being ventilated through chamber **10**C.

[0070] FIGS. **7**A and **7**B are top cross-sectional views of other embodiments of an air sterilization apparatus **600** and **700**, respectively. Apparatuses **600** and **700** can include the energy source **20** and beam redirector **50**, and many other similar components as apparatus **100** shown in FIGS. **2**-**3**D. Apparatuses **600** and **700** can be configured such that beam **22** from energy source **20** and the axis of rotation **901** of optical element **52** are substantially non-collinear. Such positioning can form an angle θ_3 between beam **22** and axis **901** that is greater than zero degrees, and less than 90 degrees. Such embodiments can allow beam **22** to reflect off surface **56** of optical element **52**, and travel longitudinally down inner volume **14**, to form energy field **80**, and in some embodiments, form one or more reflected energy fields **80**A, etc. The angle θ_3 between beam **22** and axis **901** can be varied, for example, by positioning energy source **20** (and thus beam **22**) at a substantially non-orthogonal angle relative to sidewalls **12** (FIG. **7**A), or positioning beam redirector **50** such that axis **901** is at a non-orthogonal angle relative to sidewalls **12**.

[0071] In some embodiments, one or more objects other than air can be placed within the chambers of the air sterilization apparatuses described herein. Such embodiments can allow for one or more objects such as medical tools and the like, placed within the chambers of the apparatus to be sterilized.

[0072] FIG. **8**A is a side cross-sectional view of an embodiment of an air sterilization apparatus **910** configured to sterilize one or more objects within a chamber **10**D. Chamber **10**D can include a base **12**B and a cover **12**C to cover ends **15**, **13**, respectively, of chamber **10**D. As such, chamber **10**D can form a substantially enclosed interior volume **14**. A rotating beam redirector **50**D can be configured to direct beam **22** through opening **18** and form a plurality of energy fields **180**A-**180**C, which can reflect off surface **16**, and form reflected fields **80**A-**80**C, which can impact and thus sterilize a tool **90** positioned on base **12**B. Additionally, the thermal energy from surfaces directly impacted by the energy fields can flow via conduction over non-directly energy impacted surfaces, to further achieve sterilization. In some embodiments, the optical element **52**A can be configured to rotate in the X-plane, and/or oscillate around axis **900**, to provide the energy fields and reflected fields shown. In some embodiments, the optical element **52**A can be configured to move in the Y-plane while the aforementioned X-plane rotation/oscillation is ongoing.

[0073] FIG. **8**B is a side cross-sectional view of another embodiment of an air sterilization apparatus **1000** configured to sterilize one or more objects within a chamber **10**E. Chamber **10**E can be a substantially enclosed chamber, as shown in FIG. **8**A. In this embodiment, a rotating beam redirector **50**E can be configured to direct beam **22** through opening **18**, and form a plurality of energy fields **280**A-**280**C, which can reflect off surface **16**, and form reflected fields **80**A-**80**E, which can impact and thus sterilize the tool **90** positioned on the base **12**B. In some embodiments, one or more chambers can be rotated through energy fields, so that the entirety of the outer surface of the tool is impacted with energy and sterilized.

[0074] FIG. **8**C is a side cross-sectional view of an embodiment of an air sterilization apparatus **1100** that includes a plurality of the sterilization chambers **10**E shown in FIG. **8**B. Air sterilization apparatus **1100** can include a plurality of stations in a conveyor, carousel or other suitable movable multi-platform manufacturing configuration, to allow a plurality of tools **90** in a plurality of sterilization chambers **10**E, to be sterilized consecutively by air sterilization apparatus **1000**.

[0075] FIG. **9** is a side schematic view of another embodiment of an air sterilization apparatus **1200**. Apparatus **1200** can include an outer housing **1210**, which can support and enclose an air sterilization system **400**A that is similar to system **400** shown in FIGS. **5**A-**5**B. A difference is that apparatus **1200** can include the inner channel **25** to route energy

beam **22** from energy source **20** to the optical element **52**A of beam redirector **50**B. One or more reflective elements can be positioned within inner channel **25**, to direct energy beam **22** therethrough. For example, the energy beam **22** can be directed (e.g., horizontally) through a first (e.g. horizontal) section **25**A of channel **25**, and change direction (e.g., vertically) after reflecting off a first reflective element **53**A. Beam **22** can then be directed (e.g., vertically) through a second (e.g., vertical) section **25**B of channel **25**, and change direction (e.g., horizontally) after reflecting off a second reflective element **53**B. Beam **22** can then be directed (e.g., horizontally) through a third (e.g., horizontal) section **25**C of channel **25**, to optic element **52**A. In this way, beam **22** can be directed into beam redirector **50**B in an orientation approximately opposite to the direction of beam **22** from energy source **20**. Beam **22** can then pass through optic element **52**A, which can be rotated to form energy field **80**, similar to apparatus **400** (FIGS. **5**A-**5**B). By including reflective elements **53**A and **53**B, and allowing for the redirection of energy beam **22** prior to it being further redirected by beam redirector **50**B, energy source **20** can be oriented in a way that can reduce the overall space envelope of apparatus **1200**. Such embodiments can allow for a compact, portable air sterilization apparatus that can be employed within confined spaces, such as windows, doors, walls, or other openings within, for example, a dwelling or vehicle, such as an aircraft. It will be understood that one or more reflective elements similar to elements **53**A and **53**B in FIG. **9**, can be employed with any of the embodiments described herein, to allow for various positionings of energy source **20** and to orient the reflective beam **22** from the energy source **20** in different ways.

[0076] Some embodiments of the present application relate to a method of purifying or sterilizing air. In an embodiment, the air purification method comprises flowing air into an interior volume of a chamber; directing a beam of collimated light energy into the chamber; and imparting a charge to one or more walls of the chamber to repel particles within the interior volume from one or more sidewalls of the chamber. Some embodiments further include reflecting the beam of collimated light energy off at least one sidewall. Imparting a charge can include imparting a negative charge. Some embodiments further include imparting a similar charge to particles within the interior volume of the chamber.

[0077] In another embodiment, the air purification method comprises directing a beam of collimated light energy into an interior volume of a chamber; rotating the beam of collimated light energy within the interior volume about a rotational axis; and redirecting the beam of collimated light energy to form a field of collimated light energy extending across substantially an entirety of a cross sectional area of the interior volume and extending longitudinally along a longitudinal axis within the interior volume. Some embodiments further comprise flowing air through an opening into the interior volume, and from the interior volume through a second opening. Some embodiments further comprise reflecting the field of collimated light energy to form a reflected field of collimated light energy extending across substantially an entirety of a cross sectional area of the interior volume and extending longitudinally along a longitudinal axis within the interior volume.

[0078] In another embodiment, the air purification method comprises directing a beam of collimated light energy of width W into an interior volume of a chamber; and rotating the beam of collimated light energy within the interior volume about a rotational axis at a rotational velocity corresponding to at least V/W, wherein V is the linear velocity of a particle within the chamber along the longitudinal axis. Some embodiments further comprise adjusting the linear velocity of the particle within the chamber by adjusting the amount of airflow through the chamber. In some embodiments, rotating comprises rotating the beam of collimated light energy a complete revolution about a rotational axis such that the beam of collimated light energy is redirected to form a field of collimated light energy extending across substantially an entirety of a cross sectional area of the interior volume during said revolution. In some embodiments, rotating further comprises extending the field of collimated light energy longitudinally along the longitudinal axis. Some embodiments further comprise adjusting the wavelength of the beam of collimated light energy

[0079] As described above, the speed of the rotation of the rotating optical element within embodiments of the air sterilization apparatus described herein may be adjusted via any method known to those having skill in the art, including adjustment via the controller. The below examples illustrate that the speed of the rotation of the optical element can be configured so that the energy field impacts approximately 100% of any particles traveling in the airstream.

Example 1

Cylindrical Ventilation Duct

[0080] This example discusses how the field of laser energy impacts an increased portion, such as up to approximately 100% of the particulates in a ventilation airstream traveling through a cylindrical ventilation duct, such as the embodiment shown with respect to FIGS. **4**A-**6**B.

[0081] Those having skill in the art recognize that ventilation systems are generally constructed to contain a laminar air flow. Laminar air flow requires a Reynolds Number (N_R) that is less than 3,000. An N_R above 3,000 will result in turbulent flow. Note: the change from laminar to turbulent flow can be reached at N_R=2,000 and as low as N_R=1,000.

[0082] For this example, we will select the highest N_R that still describes a laminar flow: 3,000. We select the worst case scenario parameters for the example to demonstrate functionality in the extreme and thus also the norm.

[0083] The Reynolds Number (N_R) is given by:

$$N_R = \frac{d\rho V}{n} = > V = \frac{N_R n}{d\rho}$$

[0084] Where: d=diameter of vent (meters)

$$\rho = \text{density of air}\left(\frac{\text{kg}}{\text{m}^3}\right)$$

$$V = \text{linear air flow rate within vent}\left(\frac{\text{meters}}{\text{second}}\right)$$

[0085] n=viscosity of air (pascals×second)

[0086] For example purposes, the following assumption will be made:

[0087] The temperature of air within the vent is T=20° C.=68° F.

[0088] By definition, at 20° C. the density of air is

$$\rho = 1.204\frac{\text{kg}}{\text{m}^3}$$

and the viscosity of air is n=0.018 m Pas=0.018×10^{-3} Pas=0.000018 Pas.

[0089] As we determined earlier the linear air flow rate is given by

$$V = \frac{N_R n}{d\rho}$$

[0090] Therefore, for N_R=3,000

$$V_{3,000} = \frac{3000 \times 0.018 \times 10^{-3} Pas}{0.2032\ \text{m} \times 1.204\ \text{kg/m}^3} = \frac{0.054\frac{\text{kg} \times \text{s}}{\text{s}^2 \times \text{m}}}{0.2447\frac{\text{kg}}{\text{m}^2}} = 0.221\ \text{m/s} \times 1\ \text{ft}/0.3048\ \text{m}$$

[0091] Thus, the maximum possible laminar air flow rate within the vent yields a particle linear speed of:

$V_{3,000}$=0.724 ft/sec=0.221 m/s

[0092] Our example will continue by setting a revolution per minute (RPM) for the refractive window that is equivalent to the time it takes a dimensionless particle (so used to negate a limitation of the system by nanometer sized particles) to travel a distance equivalent to the width of the laser beam. This will ensure that each particulate is impacted by the laser at least once, in a single rotation of the optical element, which forms a single energy field. In addition, reflections of the energy field down the reflective vent will generate further impacts for any remaining particles not completely destroyed by a single impact with the laser beam.

[0093] For this example, a laser beam of width 2 mm will be used.

[0094] The time that it takes a particulate to travel the width of this laser beam is:

$$T = \frac{D}{V} = \frac{2\ \text{mm}}{0.724\ \text{ft/sec}} = \frac{2 \times 10^{-3}\ \text{m}}{0.221\ \text{m/sec}} = 0.00905\ \text{sec}$$

[0095] Now, from the time that the particulate travels the width of the beam, the optical element must rotate the beam once around the circumference of the vent. Doing so will increase the likelihood of any particulate passing through the "laser field" without being hit by the laser beam; as mentioned above. The optical element must therefore rotate at a velocity (v) of:

$$v = \frac{D}{T}$$

-continued

$$= \frac{\text{circumference}}{0.00905\ \text{sec}} = \frac{2\pi r}{0.00905\ \text{sec}} = \frac{0.6387\ \text{m}}{0.00905\ \text{sec}} = 70.57\ \text{m/s}$$

[0096] Continuing unit's yields:

v=70.57 meter/sec×rev/0.6387 meter×60 sec/min=6,629 rev/min(rpm)

[0097] Thus, for the maximum airflow that will be found in any laminar ventilation system, the field of laser energy created using a 2 mm beam in an 8 inch diameter ventilation duct with a refractive window that is rotating at 7,000 rpm will impact approximately 100% of particulate.

[0098] Following this same example, a 1 mm beam in an 8 inch diameter chamber rotated at approximately 12,600 rpm will impact approximately 100% of particulate.

[0099] Also, following this example a chamber with a 6 ft diameter and a 1 mm beam will yield

V_{3000}=0.0245 m/s

T=0.04078 seconds

V=140.886 m/s=>V=1,471.31 rpm

Example 2

Square Ventilation Duct

[0100] This example discusses how the field of laser energy achieves an increased impact of approximately 100% of particulate in a ventilation airstream, for example, in a square chamber, such as that shown in FIGS. **2-3**D. Additional test results provided elsewhere herein describe how enough energy can be imparted through each laser/particle impact to kill each biological molecule impacted.

[0101] Those familiar with the art recognize that ventilation systems are constructed to contain a laminar air flow. Laminar air flow requires a Reynolds Number (N_R) that is less than 3,000. An N_R above 3,000 will result in turbulent flow. Note: the change from laminar to turbulent flow can be reached at N_R=2,000 and as low as N_R=1,000.

[0102] For this example, we will select the highest N_R that still describes a laminar flow: 3,000. We select the worst case scenario parameters for the example to demonstrate functionality in the extreme and thus also the norm.

[0103] The Reynolds Number (N_R) for a square duct is given by:

$$N_R = \frac{\rho V D_H}{n} = \frac{\rho V L}{n} = >V = \frac{N_R n}{L\rho}$$

[0104] Where: v=linear mean velocity (meters/seconds)

$$\rho = \text{density of air}\left(\frac{\text{kg}}{\text{m}^3}\right)$$

[0105] n=viscosity of air (pascals×second)

[0106] D_H=Hydraulic diameter=L=length of square vent

[0107] For example purposes, the following assumption will be made:

[0108] The temperature of air within the vent is T=20° C.=68° F.

[0109] By definition, at 20° C. the density of air is

$$\rho = 1.204\frac{\text{kg}}{\text{m}^3}$$

and the viscosity of air is n=0.018 m Pas=0.018×10^{-3} Pas=0.000018 Pas.

[0110] As we determined earlier the linear air flow rate is given by:

$$V = \frac{N_R n}{L\rho}$$

[0111] Therefore, for N_R=3,000

$$V_{3,000} = \frac{3000\times0.018\times10^{-3}Pas}{0.3048\text{ m}\times1.204\text{ kg/m}^3} = \frac{0.054\frac{\text{kg}\times\text{s}}{\text{s}^2\times\text{m}}}{0.36698\frac{\text{kg}}{\text{m}^2}} = 0.147\text{ m/s}\times1\text{ ft}/0.3048\text{ m} = 0.483\text{ ft/s}$$

[0112] Thus, the maximum possible laminar air flow rate within the vent yields a particle linear speed of:

$V_{3,000}$=0.483 ft/sec=0.147 m/sec

[0113] Our example will continue by setting a revolution per minute (RPM) for the reflective plate that is equivalent to the time it takes a dimensionless particle (used to negate a limitation of the system by nanometer sized particles) to travel a distance equivalent to the width of the laser beam. This will ensure that each particulate is hit by the laser at least once. There will be a vortex created by the plate. However, the 1st reflection off the reflective surface of the ventilation duct will fill that vortex space with energy thereby sterilizing it.

[0114] For this example, a laser beam of width 3 mm will be used.

[0115] The time that it takes a particulate to travel the width of this laser beam is:

$$T = \frac{D}{V} = \frac{3\text{ mm}}{0.147\text{ m/sec}} = \frac{3\times10^{-3}\text{ m}}{0.147\text{ m/sec}} = 0.0204\text{ sec}$$

[0116] Now, from the time that the particulate travels the width of the beam, the reflective plate must rotate the beam once around the circumference of the vent. Doing so will guarantee that no particulate will pass through the "laser field" without being hit by the laser beam; as mentioned above. The refractive window must therefore rotate at a velocity (v) of:

$$v = \frac{D}{T} = \frac{\text{perimeter}}{0.0204\text{ sec}} = \frac{4L}{0.0204\text{ sec}} = \frac{4\times0.3048\text{ m}}{0.0204\text{ sec}} = 59.75\text{ m/s}$$

[0117] Continuing unit's yields:

$$v = 59.75\text{ meter/sec}\times\text{revolution}/1.2192\text{ meter}\times 60\text{ sec/min} \Rightarrow 2{,}940.5\text{ rev/min (rpm)}$$

[0118] Thus, for the maximum airflow that will be found in any square laminar ventilation system, the field of laser energy created using a 3 mm beam in a 1 ft×1 ft square diameter ventilation duct with a reflective plate that is rotating at 3,000 rpm will impact approximately 100% of particulate.

[0119] Examples 1 and 2 above can be similarly employed for other cylindrical or square shaped chambers, or chambers of other shapes, to increase the likelihood of particulate traveling at a given velocity to be impacted by an energy beam in a single rotation of the optical element. It will be understood that although Examples 1 and 2 employ laminar flow examples, higher linear speed velocities creating turbulent flows (such as in laboratory exhaust plumes) can be similarly purified and/or sterilized through similar use of beam width, beam director rotational velocity, and linear velocity of a particle within a ventilation system air stream.

[0120] All references cited herein are incorporated herein by reference in their entirety. To the extent publications and patents or patent applications incorporated by reference contradict the disclosure contained in the specification, the specification is intended to supersede and/or take precedence over any such contradictory material.

[0121] Many modifications and variations of this invention can be made without departing from its spirit and scope, as will be apparent to those skilled in the art. The specific embodiments described herein are offered by way of example only and are not meant to be limiting in any way. It is intended that the specification and examples be considered as exemplary only.

What is claimed is:

1. An air purification apparatus, comprising:

a chamber comprising one or more walls forming an interior volume, wherein at least one of the walls comprises a reflective surface facing inwardly towards the interior volume;

a collimated light source configured to direct a beam of collimated light energy into the chamber; and

a charge generation system configured to impart a charge to the one or more walls, to repel particles contained within the interior volume from the one or more walls.

2. The air purification apparatus of claim **1**, wherein the charge generation system is configured to impart a similar charge on the particles within the interior volume.

3. The air purification apparatus of claim **1**, wherein the charge generation system is configured to impart a negative charge.

4. The air purification apparatus of claim **1**, wherein the collimated light source is a laser.

5. The air purification apparatus of claim **1**, wherein the chamber is cylindrical.

6. The air purification apparatus of claim **1**, further comprising a beam redirector disposed within the interior volume and configured to rotate through a complete revolution about a rotational axis such that the beam of collimated light energy is redirected within the chamber during said revolution.

7. The air purification apparatus of claim **6**, wherein the beam redirector is configured to redirect the beam of collimated light energy to form a field of collimated light energy extending across substantially an entirety of a cross sectional area of the interior volume and longitudinally within the interior volume.

8. The air purification apparatus of claim **7**, further comprising an energy abatement device positioned within the chamber and configured to absorb the energy of the field of collimated light energy.

9. The air purification apparatus of claim **6**, further comprising a controller configured to rotate the beam redirector about the rotational axis at a rotational velocity corresponding to V/W, wherein V is the linear velocity of a particle within the chamber along the longitudinal axis, and W is the width of the beam of collimated light energy.

10. The air purification apparatus of claim **1**, wherein the chamber comprises a first end and a second end configured to allow air to flow through the interior volume from the first end to the second end along a longitudinal axis.

11. An air purification apparatus comprising:

a chamber comprising one or more sidewalls forming an inner cross-sectional area extended longitudinally along a longitudinal axis to form an interior volume, each sidewall comprising an inwardly-facing reflective surface;

a collimated light source configured to direct a beam of collimated light into the chamber; and

a beam redirector disposed within the interior volume and configured to rotate through a complete revolution about a rotational axis such that the beam of collimated light energy is redirected to form a field of collimated light energy extending across substantially an entirety of the cross sectional area of the interior volume and extending longitudinally along the longitudinal axis.

12. The air purification apparatus of claim **11**, wherein the chamber comprises a first end and a second end configured to allow air to flow through the chamber through the interior volume from the first end to the second end along the longitudinal axis.

13. The air purification apparatus of claim **11**, wherein the collimated light source is a laser.

14. The air purification apparatus of claim **11**, wherein the chamber is cylindrical.

15. The air purification apparatus of claim **14**, wherein the beam redirector is disposed within an elbow of the chamber.

16. The air purification apparatus of claim **11**, wherein the beam redirector comprises an optic element with a surface comprising a reflective material.

17. The air purification apparatus of claim **11**, wherein the beam redirector comprises an optic element with a refractive lens.

18. The air purification apparatus of claim **11**, wherein the field of collimated light energy has a substantially frustroconical shape.

19. The air purification apparatus of claim **11**, wherein a portion of the reflective surface is oriented to be substantially non-parallel with the longitudinal axis.

20. The air purification apparatus of claim **19**, wherein the reflective surface comprises one or more reflective grooves.

21. The air purification apparatus of claim **11**, wherein the field of collimated light energy is reflected by the inwardly-facing reflective surface to form one or more reflected energy fields extending longitudinally along the longitudinal axis.

22. The air purification apparatus of claim **11**, further comprising an energy abatement device positioned within the chamber and configured to absorb the energy of the field of collimated light energy.

23. The air purification apparatus of claim **11**, further comprising a controller configured to rotate the beam redirector about the rotational axis at a rotational velocity corresponding to V/W, wherein V is the linear velocity of a particle within the chamber along the longitudinal axis, and W is the width of the beam of collimated light energy.

24. An air purification apparatus comprising:

a chamber comprising:

one or more sidewalls forming an interior volume, the one or more sidewalls comprising one or more surfaces facing inwardly towards the interior volume; and

a first opening and a second opening configured to allow air to flow through the interior volume from the first opening to the second opening along a longitudinal axis;

a collimated light source configured to direct a beam of collimated light energy into the interior volume of the chamber;

a beam redirector disposed within the interior volume and configured to rotate through a complete revolution about a rotational axis such that the beam of collimated light energy is redirected to form a field of collimated light energy extending across substantially an entirety of a cross sectional area of the interior volume during said revolution; and

a controller configured to rotate the beam redirector about the rotational axis at a rotational velocity corresponding to at least V/W, wherein V is the linear velocity of a particle within the chamber along the longitudinal axis, and W is the width of the beam of collimated light energy.

25. The air purification apparatus of claim **24**, wherein the field of collimated light energy comprises a plurality of coplanar reflected beams.

26. The air purification apparatus of claim **24**, wherein the field of collimated light energy extends longitudinally along the longitudinal axis.

27. The air purification apparatus of claim **24**, wherein the collimated light source is a laser.

28. The air purification apparatus of claim **24**, wherein the chamber is cylindrical.

29. The air purification apparatus of claim **24**, wherein the controller is configured to adjust the wavelength of the beam of collimated light energy.

30. The air purification apparatus of claim **24**, wherein the controller is configured to adjust the amount of air flowing through the chamber.

31. The air purification apparatus of claim **24**, further comprising a charge generation system configured to impart a

charge to the one or more walls, to repel similarly charged particles contained within the interior volume from the one or more walls.

32. The air purification apparatus of claim **31**, wherein the controller is configured to adjust the amount of charge imparted to the one or more walls.

* * * * *