G. L. ROCK.

CLUTCH.

APPLICATION FILED DEC. 11, 1916.

1,315,578.

Patented Sept. 9, 1919.

Fig. 3.

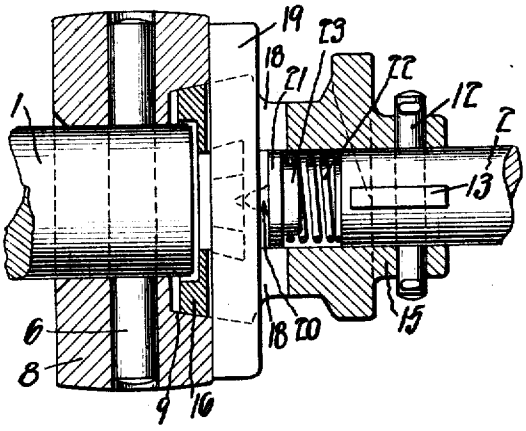

Fig. 4.

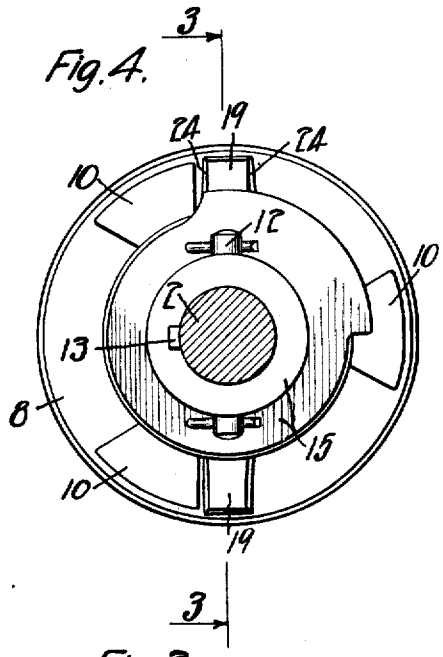

Fig. 1.

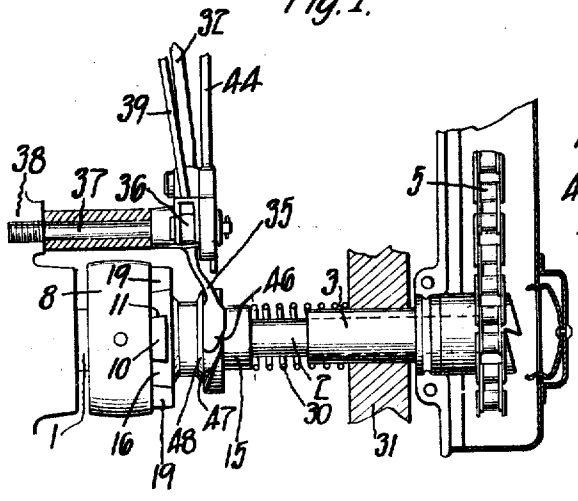

Fig. 2.

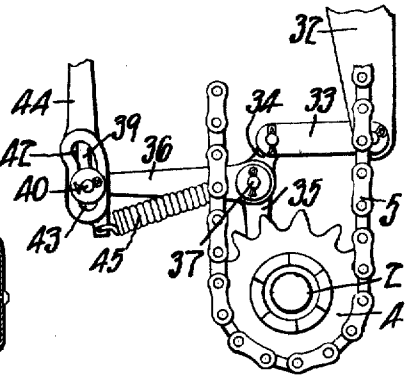

WITNESSES:

J. L. Bates.

INVENTOR

George L. Rock

BY

Pagelsen & Spencer.

ATTORNEYS

THE COLUMBIA PLANOGRAPH CO., WASHINGTON, D. C.

UNITED STATES PATENT OFFICE.

GEORGE L. ROCK, OF WAUKESHA, WISCONSIN.

CLUTCH.

1,315,578. Specification of Letters Patent. Patented Sept. 9, 1919.

Application filed December 11, 1916. Serial No. 136,160.

To all whom it may concern:

Be it known that I, GEORGE L. ROCK, a citizen of the United States, and residing at Waukesha, in the county of Waukesha and State of Wisconsin, have invented a new and Improved Clutch, of which the following is a specification.

In certain types of mechanism it is desirable to apply power to a driving shaft for the purpose of driving another (or driven) shaft at a high initial speed. Ordinary jaw clutches are not suitable for this purpose for the reason that the jaws of the movable clutch member, when brought up close to those of the other clutch member, very often fail to register therewith and, as a consequence, tear or clatter across the face of the latter for a short time at least when power is applied, with resultant injury to both sets of jaws. The present invention relates to a clutch mechanism in which the engagement of the clutch members is insured whenever the movable element is forced home to the other element and whereby the shafts are positively connected for driving purposes; and it consists in a clutch member having jaws (preferably arranged in staggered or offset relation to each other; that is, a diameter which intersects a jaw at one end preferably passes through a depression at the other end) together with a coöperating clutch member that includes a bar key or equivalent member rotatable therewith but tiltable thereon about an axis at right angles to the common axis of the shafts which are to be joined by the clutch, whereby, should one end of the key encounter the face of a jaw as the clutch members are forced together, its other end will nevertheless immediately seat itself in the corresponding depression, after which a slight movement of the driving shaft brings the key and jaws into engagement and insures a positive driving action. While it is preferable to mount the tilting key on the movable clutch member, it may be carried by the relatively fixed clutch member.

One embodiment of the invention appears in the accompanying drawings in which Figure 1 is a plan view, parts being broken away, showing its application to an engine starter. Fig. 2 is a front view corresponding to Fig. 1, parts being omitted. Fig. 3 is a section on line 3—3 of Fig. 4. Fig. 4 is a view taken from the right end of Fig. 3.

1 indicates the shaft of an internal combustion engine, with which a starter shaft 2 that is mounted in a bushing 3 is axially alined. The starter shaft is driven in a clockwise direction (Fig. 2) to start the engine by means of the sprocket wheel 4 and chain 5, and the engine in turn drives the chain in the same direction to rewind the starter in the manner stated in my application for patent on engine starter, Serial Number 27478, filed May 12th, 1915.

The engine shaft 1 has mounted thereon by means of the pin 6 or otherwise a clutch member 8 (which in the particular installation serves as a fan pulley), the front face of which is preferably hollowed out to form a conical guide 9. Outside of the guide are jaws 10 (as shown, three) preferably arranged in staggered or offset relation to each other, that is, a diameter which intersects a jaw at one end passes through a depression at the other (this is most readily accomplished by providing an odd number of equally spaced jaws.) The jaws may be undercut as indicated at 11 (Fig. 1).

The starter shaft 2 has rigidly secured thereon, by means of the pin 12 and key 13 (which, without weakening the shaft appreciably, affords the large surface necessary for the transmission of power), a clutch member 15 that includes the conical end 16 arranged to be received in the guide 9, and said end is provided with radial slots 18 in which a bar key 19 is slidable longitudinally of the common axis of the shafts. This bar key is socketed at its rear side to receive a pivot or projection 20 on the forward side of a pivot block 21 that conforms to and is slidable in the shaft bore of the clutch member 15. A spring or cushion 22 having one end seated against the end of the shaft 2 and the other end surrounding the shoulder 23 on the block 21 normally holds the bar at the forward limit of its movement,—in other words, with both ends engaging the front walls of the slots 18. The ends of the bar key are beveled as indicated at 24 (Fig. 4) in those cases in which the jaws 10 are undercut.

In operation, upon the shaft 2 and clutch member 15 being thrust to the left (Fig. 3) the end 16 of the latter enters the guide 9 and insures a proper alinement of the parts. Should the shafts be so positioned that both the ends of the bar key enter depressions between the jaws the engagement is made in the same manner as in an ordinary jaw

clutch under similar conditions; should, however, the shafts be so turned relative to one another that one end of the bar key encounters the face of one of the jaws 10, said bar key is snapped around the pivot 20, or, in other words, about an axis at right angles to the common axis of the shafts, by the spring 22, after which a relative movement of the shafts causes one end of the key to contact with the adjacent jaw and the other end to seat itself in the corresponding depression. It is impossible, therefore, for the driving shaft to be thrown forward without positively carrying the driven shaft with it and all wear and noise, such as occurs in the ordinary jaw clutch on account of the jaws of one member sweeping over the jaws of the other, is avoided.

Any suitable means may be employed for shifting the clutch member 15 toward and from the member 8; as shown, the shaft 2 is surrounded by the spring 30 which bears against the support 31 and tends to thrust the clutch member 15 to the left (Fig. 1) into engagement with the member 8—such engagement is, however, prevented when the spring (not shown) in which the power for starting the engine is stored is wound, by means of a member 32 and a link 33, which the spring then forces to the left (Fig. 2), said link being pivotally connected to an arm 34 of a three-armed lever which includes a cam arm 35 and a returning arm 36 and is pivoted on a stud 37 on the engine casing 38. The lever 34—35—36 may be drawn clockwise about the stud by means of a manually operated link 39 (Fig. 1) until the pin 40 which connects the link to the arm 36 is drawn into the inclined end portion 42 of a slot 43 in a controlling member 44 that is urged to the right (Fig. 2) by the tension spring 45. When the thrust exerted on the link 33 by the member 32 overcomes the friction of the pin 40 in the end 42 of the slot, the pin is thrown to the lower end of the slot (Fig. 2) which allows the cam 46 on the arm 35 to come into the path of the inclined cam surface 47 on the member 15, whereupon the latter is thrown to the right (Fig. 1) against the force of the spring 30 and the bar key is withdrawn from the path of the jaws 10—the force exerted on the lever then instantly draws the cam 46 down behind the inclined surface 48 whereby the clutch member 15 is permanently held away from the member 8, that is, until another pull on the link 39 withdraws the cam 46 and allows the spring 30 to again become active. That the clutch member 15 be rigid with the shaft 2 is not necessary, it being essential only that one of the clutch members be shiftable longitudinally of the common axis of the shafts.

The details of construction may be varied within wide limits without departing from the spirit of my invention; I do not, therefore, wish to be limited except as indicated by the subjoined claims.

I claim:—

1. A clutch for alined shafts comprising a clutch member constrained to rotate with one of the shafts, a second clutch member constrained to rotate with the other shaft, one of the clutch members being movable toward and from the other, one of the clutch members including jaws having end faces of considerable width, said clutch including means whereby the other member may immediately assume a position as the movable member is moved toward the other member, and regardless of the relative angular positions of said members at the time, such that positive driving engagement is insured at the first contact of said member with a jaw during subsequent relative angular movement of the members.

2. A clutch for alined shafts comprising a clutch member constrained to rotate with one of the shafts, said clutch member having jaws, and a second clutch member constrained to rotate with the other shaft, said second clutch member including an element tiltable about an axis at an angle to the common axis of the shafts, means for urging the tiltable element forward bodily along the second clutch member toward the first clutch member, one of the clutch members being movable toward and from the other, whereby driving engagement of the parts is insured at an early stage of the movement of the one member toward the other.

3. A clutch for alined shafts comprising two main clutch members the first of which has a plurality of jaws, one of the main members being movable bodily toward and from the other, a bar carried by the second main member, said bar having two driving ends of less width than the distance between adjoining jaws and being swingable about an axis at right angles to and substantially intersecting the common axis of the shafts, said ends of the bar and said jaws being arranged in offset relation in respect to one another about the axis of the shafts, whereby, when the movable main clutch member is caused to approach the other main clutch member, one of the driving ends of the bar immediately enters the path of the jaws regardless of the fact that the other end may be held out of said path by contact with the end of one of the jaws.

4. In clutch mechanism for alined shafts, jaws spaced circumferentially about one of the shafts and secured to rotate therewith, said jaws having side faces, a member secured to rotate with the other shaft and tiltable toward and from the jaws, said member having portions adapted to contact with the jaws, said portions being of less width

than the distance between adjacent jaws and said jaws and said portions being so constructed and arranged that engagement of either portion with the side faces of the jaws enables the positive driving of one shaft by the other, said portions and said jaws being so spaced angularly about the axis of the shafts that when one portion bears upon the end of one of the jaws the other portion registers with one of the spaces between the jaws, means for causing a relative movement between the jaws and the member along the axis of the shafts, whereby, should one of the portions encounter the end of one of the jaws in such movement the other portion of said member is simultaneously allowed to enter the space between the jaws to insure positive driving of one shaft by the other.

5. In clutch mechanism for alined shafts, jaws spaced circumferentially about one of the shafts and secured to rotate therewith, a member carried by the other shaft and secured to rotate therewith, said member having an end of less width than the distance between adjacent jaws, means for connecting the member to its shaft so constructed and arranged that the member may both move bodily longitudinally of the axis of said shaft and tilt about an axis at right angles to said axis, said means including resilient means for cushioning said bodily longitudinal movement.

6. A clutch for alined shafts comprising an element secured to rotate with one of the shafts, said element having an odd number of jaws spaced substantially equally circumferentially about the common axis of the alined shafts, and another element secured to rotate with the other shaft, pivot means about which the last mentioned element is tiltable in a plane that includes said common axis, resilient means for urging said pivot means toward said first named element a short distance, and additional means for shifting one of the elements bodily toward and from the other.

7. A clutch for alined shafts comprising a member secured to rotate with one of the shafts, said member having an odd number of jaws spaced substantially equally circumferentially about the common axis of the alined shafts, a second member secured to rotate with the other shaft, said second member being hollow and being slotted transversely and projecting from the end of its shaft, a spring within the second member, a pivot urged toward the first mentioned member by said spring, a key bar tiltable about said pivot and in said slots, and means for causing one of the members to approach the other whereby one shaft is positively driven by the other.

8. A clutch for alined shafts comprising a member secured to rotate with one of the shafts, said member having a tapered guide formed therein and having spaced jaws outside of the entrance to said guide, a second member secured to rotate with the other shaft, said second member being tapered to fit the guide and being slotted radially, a key tiltable in said slot into the path of the jaws, and means for causing one member to approach the other, whereby one of the shafts is positively driven by the other.

GEORGE L. ROCK.

Copies of this patent may be obtained for five cents each, by addressing the "Commissioner of Patents, Washington, D. C."