March 16, 1948. G. H. HANSEN, JR 2,438,050

BOTTLE DECAPPING AND POURING MECHANISM FOR VENDING MACHINES

Filed May 29, 1944 3 Sheets-Sheet 1

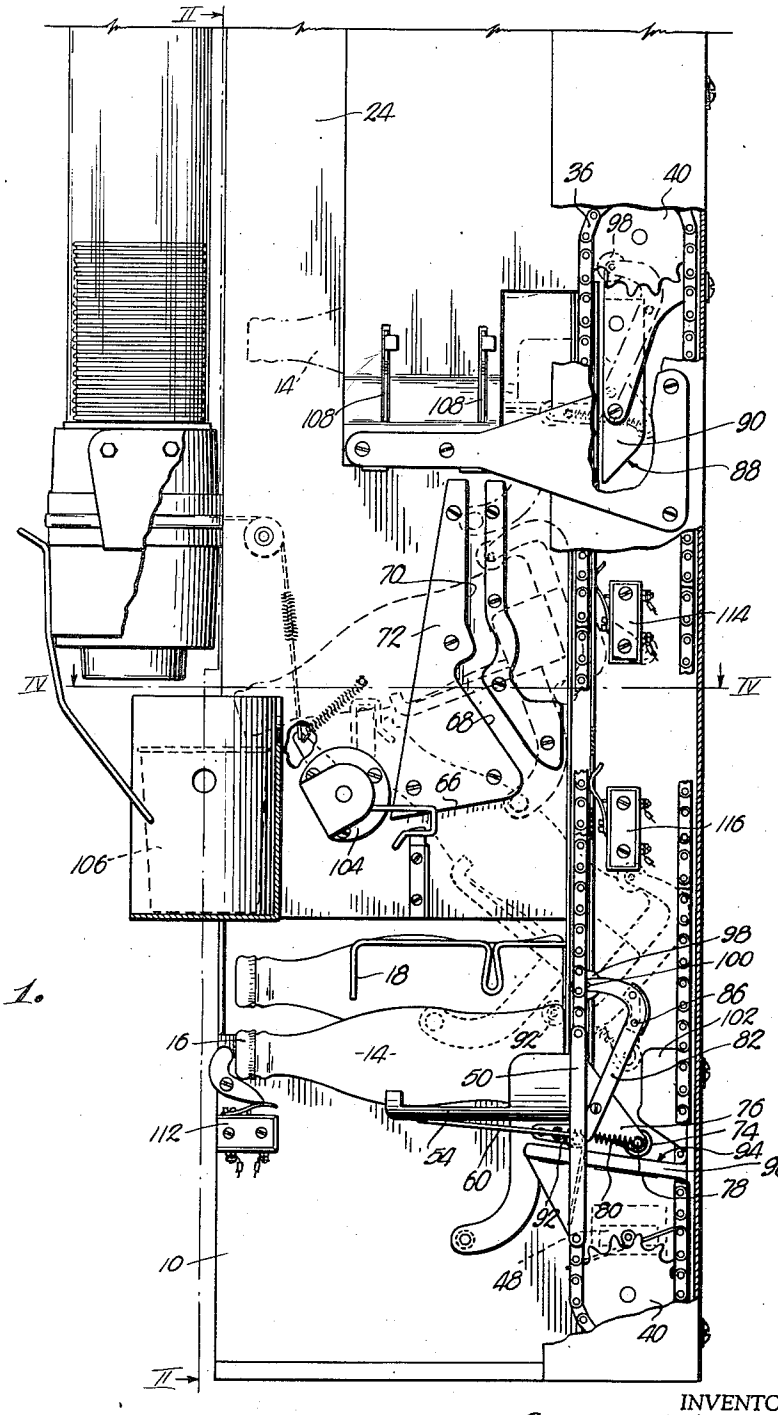

Fig. 1.

INVENTOR.
George H. Hansen, Jr.

BY Earl Hoover ATTORNEY.

March 16, 1948. G. H. HANSEN, JR 2,438,050

BOTTLE DECAPPING AND POURING MECHANISM FOR VENDING MACHINES

Filed May 29, 1944 3 Sheets-Sheet 2

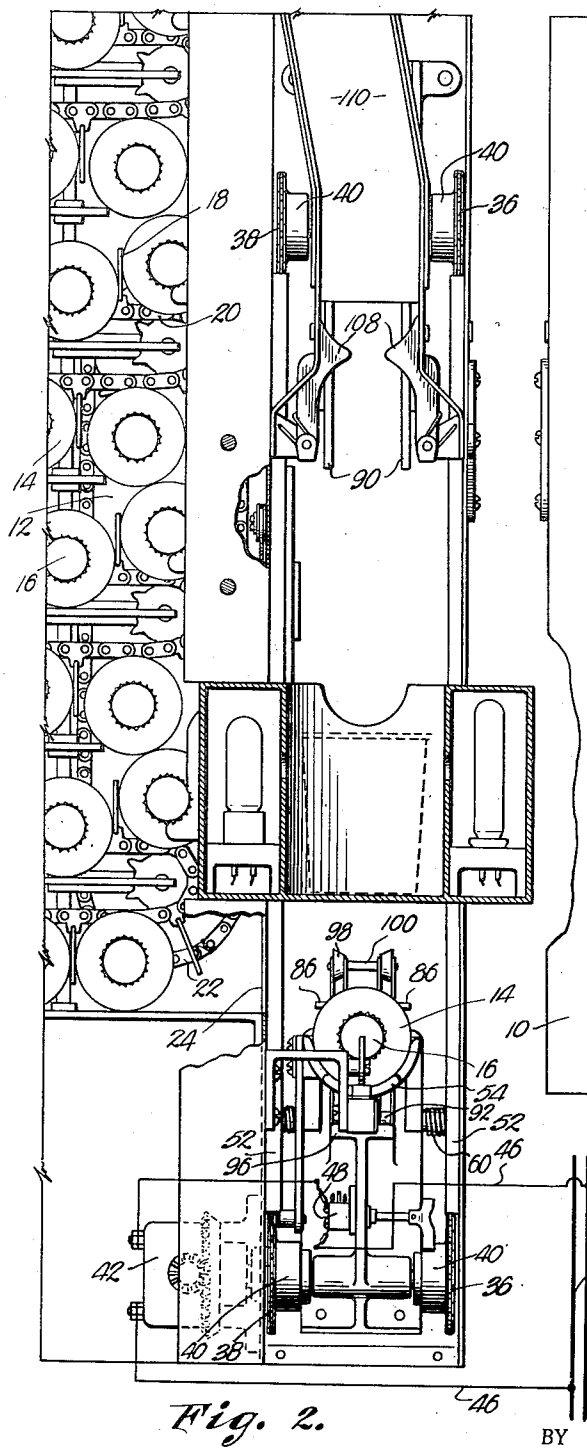

Fig. 2.

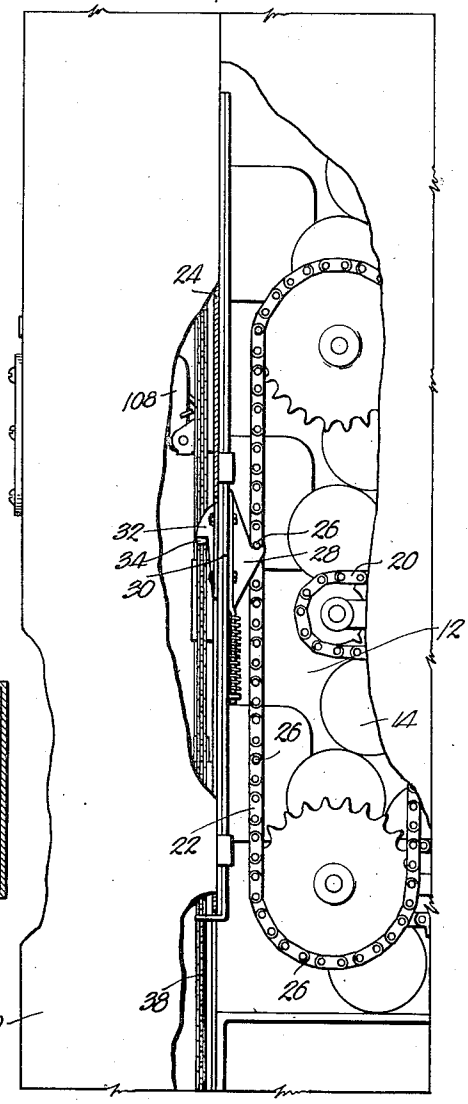

Fig. 3.

INVENTOR.
George H. Hansen, Jr.

BY

ATTORNEY.

March 16, 1948. G. H. HANSEN, JR 2,438,050

BOTTLE DECAPPING AND POURING MECHANISM FOR VENDING MACHINES

Filed May 29, 1944 3 Sheets-Sheet 3

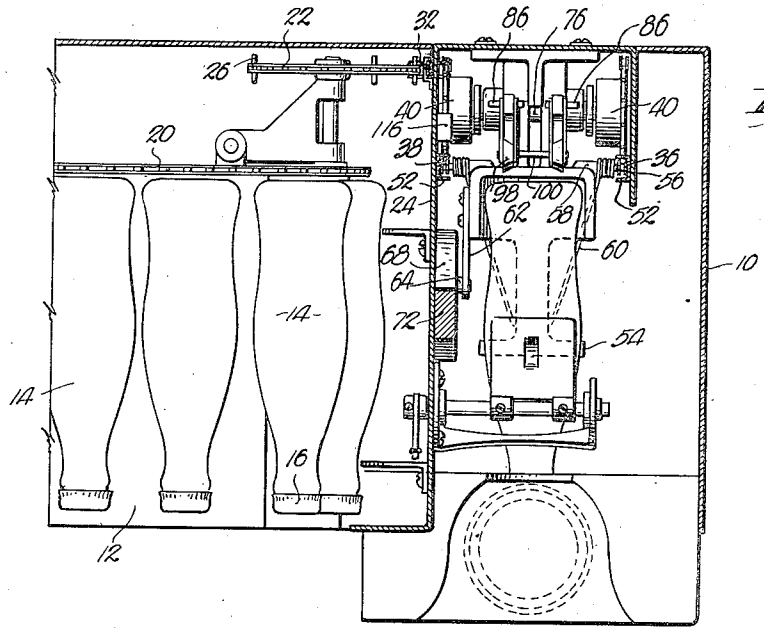

Fig. 4.

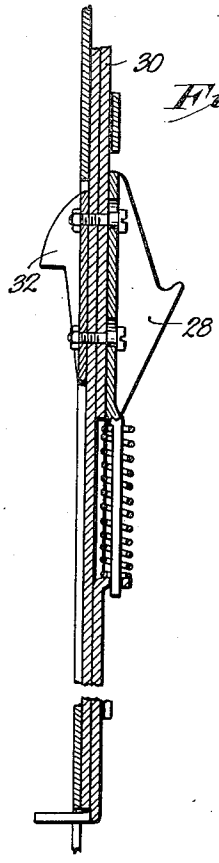

Fig. 5.

Fig. 6.

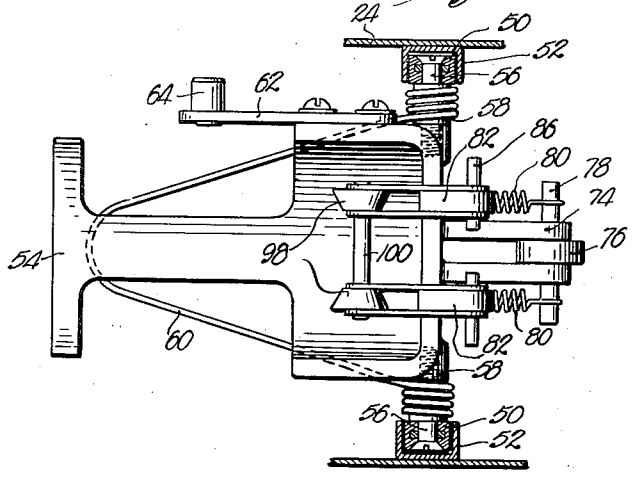

INVENTOR.
George H. Hansen, Jr.

BY

ATTORNEY.

Patented Mar. 16, 1948 2,438,050

UNITED STATES PATENT OFFICE

2,438,050

BOTTLE DECAPPING AND POURING MECHANISM FOR VENDING MACHINES

George H. Hansen, Jr., Kansas City, Mo., assignor to C. Earl Hovey, trustee, Kansas City, Mo.

Application May 29, 1944, Serial No. 537,956

6 Claims. (Cl. 225—21)

1

This invention relates to vending machines for the contents of bottled goods, and has for a primary object the provision of mechanism in such equipment, for moving a bottle from a portion of a chamber to another portion thereof, and for decapping and pouring the contents from the transported bottle as the same is shifted.

One of the more important objects of this invention is the provision of bottle handling apparatus designed for use in vending machines, as disclosed in U. S. Letters Patent No. 2,333,118 issued November 2, 1943, which apparatus contributes to the efficiency, accuracy of operation, and compactness of the machine embodying the invention covered by said patent.

A yet further object of this invention is to provide a vending machine for bottled goods, having a decapper mechanism for moving a capped bottle from a storage space to the decapper, and thereafter tipping the bottle to a position where the contents thereof is emptied and subsequently depositing the decapped and emptied bottle into a chamber designed for the reception thereof.

This invention has for another aim to provide mechanism of the aforementioned character that is positive in its action; occupies a minimum amount of space; grips and holds the bottle without danger of displacement from a position where its cap may be removed and the contents poured therefrom; and has its main bottle-carrying clamp attached to a support which moves in a rectilinear, reciprocating path.

Other objects of the invention will appear during the course of the following specification, referring to the accompanying drawings, wherein:

Fig. 1 is a fragmentary side elevational view of a vending machine for bottled goods, made in accordance with the present invention and having parts thereof broken away for clearness.

Fig. 2 is a fragmentary vertical sectional view taken on line II—II of Fig. 1, looking in the direction of the arrows.

Fig. 3 is a rear elevational fragmentary view of the vending machine with portions of solid walls omitted to reveal the manner of periodically interconnecting certain parts of the vending machine mechanism.

Fig. 4 is a horizontal cross sectional view taken on line IV—IV of Fig. 1 and looking in the direction of the arrows.

Fig. 5 is an enlarged detailed fragmentary sectional view through a portion of the coupler, shown in Fig. 3; and

Fig. 6 is an enlarged top plan view of the bottle clamp illustrating in section, the reciprocating

2

supports to which the clamp is pivotally secured.

One form of a bottle vending machine with which the improvements, about to be described in detail, may be associated, is disclosed in the aforesaid Letters Patent No. 2,333,118 and reference to said patent will readily teach the manner in which the capped bottle of a vending machine, is automatically moved through a series of steps upon the operation of the machine, said steps include removal of the capped bottle from a chamber; carrying said bottle into operative relation with a decapper; emptying the contents of the decapped bottle into a suitable receptacle; and thereafter depositing the emptied bottle into a chamber within the case of the vending machine.

In the aforesaid patent, the mechanism for gripping and transporting the bottle through the sequence of steps just set down, is adequate but capable of improvement because the form of clamp for the bottle tends to shift the same laterally where the mouth and cap sometimes become maladjusted as regards the decapper and cap detecting switch. Also, the transporting mechanism for the bottle travels through a serpentine path to bodily move the bottle and clamp from one side to another as one end of its path of travel is approached. The improve motivating means for the bottle, about to be described, obviates the sidewise motion, and therefore, any tendency to rack as well as provide a smooth, more noiseless piece of equipment. Many of the parts of the vending machine shown in the patent and that are associated with the improved elements thereof, are illustrated in the accompanying drawings, and therefore, the manner of embodying this invention in the patented vending machine, will become apparent to those skilled in the art.

In the drawings, the numeral 10 designates the case wherein the mechanism is housed and that is provided with a bottle chamber 12 for the storage of bottles 14 having conventional crown caps 16 thereon. These bottles are arranged in a series of horizontal shelves and between partitions 18 extending laterally from endless chains 20, all interconnected for periodic movement by a master sprocket chain 22 disposed near wall 24 adjacent to, yet spaced from one end of cabinet 10.

Sprocket chain 22 is equipped with a number of pins 26 projecting outwardly into the path of travel of a lifter 28 attached to a reciprocating bar 30. On the opposite side from that of lifter 28, is carried a dog 32 periodically engageable by a lug 34 mounted on one of the hereinafter de-

scribed bottle lifting chains, as clearly illustrated in Fig. 3.

A pair of opposed endless chains 36 and 38 respectively, are in mesh with like sprockets 40, positioned as illustrated in Fig. 1, to present a straight stretch in the two oppositely arranged sprocket chains 36 and 38 and between which straight stretches of the chains the bottle clamp is mounted.

During the operation of the equipment, motor 42 receiving current from lines 44 through connectors 46 and reversing switch 48 motivates chains 36 and 38 to carry a relatively long supporting link 50 toward and from the upper sprockets 40. There is a link 50 in each straight stretch of endless chains 36 and 38, and this stretch of the endless chains lies in a channel 52, as seen in Fig. 4. There is a channel for each chain 36 and 38 and the same serve as guides to insure that links 50 will travel in a rectilinear path which is a straight, vertical movement devoid of any lateral travel.

The bottle clamp per se comprises a cradle 54 having an inner, arcuate face upon which the bottles 14 may rest when the same are dropped thereonto from chamber 12. Cradle 54 has opposed trunnions 56 extending laterally through links 50. These trunnions project outwardly from bosses 58 about which is wound a portion of the legs of a V-shaped spring 60. The bight of this spring 60 underlies the free end of cradle 54 opposite from that end from which trunnions 56 project. The portions of the legs of spring 60 beyond the coiled parts thereof, depend, as illustrated in dotted lines of Fig. 1, to a point where their ends are anchored against link 50.

An arm 62 rigidly secured to the inner side of cradle 54, has a lateral roller or friction element 64 for engagement with cam faces 66, 68 and 70 of abutment 72 mounted on wall 24.

Cradle 54 extends rearwardly in the form of a bifurcated portion 74 to receive a roller 76 mounted on pintle 78. This pintle 78 is journalled in bifurcated portion 74 and extends laterally therebeyond, as clearly illustrated in Fig. 6, to receive one end of coil springs 80, the other ends whereof are attached to fingers 82 shaped as shown in Fig. 1 and pivotally mounted to the sides of cradle 54 as at 84. These fingers 82 are each L-shaped and have pins 86 at their elbows to strike angled faces 88 of the two spaced apart abutments 90, disposed near the upper end of the straight stretch in the sprocket chains and near the end of the path of travel of the clamp, of which fingers 82 and pins 86 are a part. The lower end of each finger 82 has a roller 92 which rests upon surface 94 of a platform 96. This platform 96 is disposed near the other end of the path of travel of the clamp.

Pressure members 98 on the free end of each finger 82, are pivotally mounted by a connecting rod 100, which serves as an axle for the pressure members. These said members 98 are of resilient material and rotatably mounted on rod 100 and the annular peripheries thereof are inclined as illustrated in Fig. 6. In other words, the pressure members 98 are frusto-conical with their smaller diameters in opposed relation, to the end that a cylindrical bottle is gripped, as illustrated in Fig. 1. A cam 102 mounted on case 10 in the path of travel of roller 76, serves to tip bottle 14 as later described.

Motor 42 is placed into motion when the operator of the vending machine drops a coin, or otherwise manually manipulates the parts to close the circuit, all as set forth in the aforesaid patent. By virtue of the fact that motor 42 is connected to lower sprockets 40, endless chains 36 and 38 are motivated to lift link 50 along a rectilinear path of travel within channels 52. After the full length of the straight path of travel of links 50 and their supported bottle clamp has been traversed, motor 42 will be reversed and the clamp will return to the point of beginning or that position shown in Fig. 1. During this step in the operation, sprocket chain 22 will be motivated through the lifter 28 and dog 32 for advancing bottles 14 one step, where a bottle will always rest in the cradle 54 of the clamp when it is in the normal position at the point of beginning (Fig. 1).

Fingers 82 are held out of the gripping position by virtue of roller 92 resting upon face 94 of platform 96. This pressure extends springs 80 and draws pressure members 98 upwardly and to the right as viewed in Fig. 1. Thus, bottle 14 may drop into cradle 54 and remain there until the machine is started.

As cradle 54 is raised, trunnions 56 carried in supporting links 50, will allow cradle 54 to move about their aligned axes. As link 50 starts upwardly, roller 76 will engage cam 102, whereupon bottle 14 will be tilted upwardly about the centers of trunnions 56 where cap 16 is engaged by the decapper, generally designated by the numeral 104. This decapper is pivotally mounted and as supporting link 50 continues its upward travel, cap 16 will be withdrawn. Obviously, as cradle 54 leaves platform 96 roller 92 on fingers 82 will be lifted to allow springs 80 to pull pressure members 98 down against the side of the bottle near the end within cradle 54. The movement of these fingers is parallel to the longitudinal axis of bottle 14 and due to their pivotal mounting 84, no lateral displacement or "rolling" of the bottle can occur. This structure, including pressure members 98, fingers 82 and springs 80 will rigidly hold bottle 14 as cap 16 is withdrawn therefrom. The position in the path of travel where the cap is being withdrawn from the bottle is shown in dotted lines of Fig. 1.

Continuing upward movement of link 50 will carry bottle 14 to the position shown in dash lines of Fig. 1, where the contents of bottle 14 is poured into a receptacle 106. This tipping action on the part of the bottle 14 is initiated and accomplished by face 66 on abutment 72. Roller 64 on arm 62 is brought into engagement with faces 66 and 68 immediately after cap 16 is withdrawn.

As support link 50 continues upwardly, roller 64 travels over vertical face 70 and the longitudinal axis of bottle 14 again rests in a horizontal plane as the emptied bottle enters between jaws 108 which support the bottle after pressure members 98 and fingers 82 are withdrawn from their gripping position by pins 86 engaging the inclined faces 88 on abutments 90. The position of the pressure members 98 and the associated fingers 82, are shown in dot-and-dash lines in Fig. 1, and bottle 14 likewise illustrated, is above jaws 108.

As the empty bottles are fed upwardly between these jaws 108, they are forced along a chute 110 into another part of the chamber within vending machine case 10, in the same manner as disclosed in the aforesaid Letters Patent.

Switch 112, operable by cap 16 of bottle 14, and switches 114 and 116 form no part of the invention hereinafter claimed.

Having thus described the invention, what is claimed as new and desired to be secured by Letters Patent is:

1. In a vending machine for bottled goods, having a bottle chamber and a decapper, mechanism for moving a bottle from one part of the chamber into operative engagement with the decapper and to another part of the chamber comprising a bottle clamp; a movable support for the clamp; and parts for tipping the clamp and its contained bottle as the support is moved through its path of travel, said clamp comprising a cradle, and a finger having a pair of pressure members on the free end thereof for engagement with a bottle contained in the cradle on each side of the medial longitudinal plane thereof, said pressure members being swingably mounted on the cradle for movement toward and from the bottle in a plane parallel to the longitudinal axis of the bottle, said cradle and said pressure members each having means for yieldably clamping the bottle therebetween.

2. In a vending machine for bottled goods, having a bottle chamber and a decapper, mechanism for moving a bottle from one part of the chamber into operative engagement with the decapper and to another part of the chamber comprising a bottle clamp; a movable support for the clamp; and parts for tipping the clamp and its contained bottle as the support is moved through its path of travel, said clamp comprising a cradle, a pair of fingers pivotally carried by the cradle, a pressure roller on the end of each finger, and springs for yieldably holding the fingers in a position where the pressure rollers are in engagement with a bottle contained in the cradle, said fingers being so mounted and formed as to swing the pressure rollers in planes parallel to and on each side respectively of the longitudinal axis of the bottle whereby lateral displacement or rolling in the cradle during the movement of the fingers toward the bottle is prevented.

3. In a vending machine for bottled goods, having a bottle chamber and a decapper, mechanism for moving a bottle from one part of the chamber into operative engagement with the decapper and to another part of the chamber, comprising a bottle supporting cradle; mechanism for moving said cradle along a rectilinear path of travel, including a pair of reciprocable, spaced-apart, endless chains, each having a length thereof confined in a channel to guide the same along a straight line of travel; a supporting link for the cradle fixed in said length of each chain, said cradle being disposed between said lengths and pivotally mounted to said links for swinging movement in transverse relation to the path of travel of said chains; parts for tipping the cradle and its contained bottle as the cradle is moved through its path of travel; and a finger swingably mounted on the cradle for movement toward and from a bottle contained in the cradle in a plane parallel to the longitudinal axis of the bottle, said cradle and said finger each having means for yieldably clamping the bottle therebetween.

4. In a vending machine for bottled goods, having a bottle chamber and a decapper, mechanism for moving a bottle from one part of the chamber

into operative engagement with the decapper and to another part of the chamber, comprising a bottle supporting cradle; mechanism for moving said cradle along a rectilinear path of travel, including a pair of reciprocable, spaced-apart, endless chains, each having a length thereof confined in a channel to guide the same along a straight line of travel; a supporting link for the cradle fixed in said length of each chain, said cradle being disposed between said lengths and pivotally mounted to said links for swinging movement in transverse relation to the path of travel of said chains; parts for tipping the cradle and its contained bottle as the cradle is moved through its path of travel; and a finger swingably mounted on the cradle having a pair of pressure members on the free end thereof for engagement with a bottle contained in the cradle on each side of the medial longitudinal plane thereof, said cradle and said finger each having means for yieldably clamping the bottle therebetween.

5. In a vending machine for bottled goods, having a bottle chamber and a decapper, mechanism for moving a bottle from one part of the chamber into operative engagement with the decapper and to another part of the chamber, comprising a bottle supporting cradle; means for moving said cradle along a rectilinear path of travel, including a pair of opposed chains having a straight stretch therein, and sprockets operably meshing with the endless chains to establish said straight stretches thereof; supporting means for pivotally mounting the cradle to the chains between the straight stretches thereof; parts for tipping said cradle as it moves along its rectilinear path of travel; a pair of fingers pivotally carried by the cradle; a pressure roller on the end of each finger; and springs for yieldably holding the pressure rollers in engagement with a bottle contained in the cradle, said fingers being disposed to swing the rollers in planes parallel to and on each side respectively of the longitudinal axis of said cradle.

6. In a vending machine for bottled goods, having a bottle chamber and a decapper, mechanism for moving a bottle from one part of the chamber into operative engagement with the decapper and to another part of the chamber, comprising a bottle clamp; a reciprocable, endless chain for moving said clamp along a straight line of travel, said clamp being swingably mounted on said chain; and means for tipping said cradle as it moves in a straight line comprising an arm fixed to said cradle to one side of said chain and having a roller on the free end thereof, and an abutment having a plurality of cam faces disposed in the straight path of travel of said clamp for engaging the roller to tip the clamp and its contained bottle as the same is moved by said endless chain.

GEORGE H. HANSEN, JR.

REFERENCES CITED

The following references are of record in the file of this patent:

UNITED STATES PATENTS

Number	Name	Date
1,004,427	Hillyer	Sept. 26, 1911
2,333,118	Olsen	Nov. 2, 1943