649385

SPRUSON & FERGUSON

AUSTRALIA

PATENTS ACT 1990

PATENT REQUEST: STANDARD PATENT

I/We, the Applicant(s)/Nominated Person(s) specified below, request I/We be granted a patent for the invention disclosed in the accompanying standard complete specification.

[70,71] Applicant(s)/Nominated Person(s):

Taiyo Kogyo Co., Ltd., of No. 23-17, Higashi-Yotsugi 1-chome, Katsushika-Ku, Tokyo, JAPAN

[54] Invention Title:
Drive Unit of Vehicle Toy

[72] Inventor(s):
Shohei Suto

[74] Address for service in Australia:
Spruson & Ferguson, Patent Attorneys
Level 33 St Martins Tower
31 Market Street
Sydney New South Wales Australia (Code **SF**)

Details of Basic Application(s):

[31] Appl'n No(s):	[33] Country:	[32] Application Date:
4-160045	JP	28 May 1992

DATED this THIRD day of NOVEMBER 1992

Taiyo Kogyo Co., Ltd.

By: J. Yoshino

Registered Patent Attorney

IRN: 224279

INSTR CODE: 51114

S 033264 041192

5845/2

SPRUSON & FERGUSON

AUSTRALIA
CONVENTION
STANDARD
& PETTY PATENT
DECLARATION

COMMONWEALTH OF AUSTRALIA
THE PATENTS ACT 1952

DECLARATION IN SUPPORT OF A CONVENTION APPLICATION FOR A PATENT

In support of the Convention Application made for a patent for an invention entitled:

Title of Invention: DRIVE UNIT OF VEHICLE TOY

I/~~We~~ Shohei Suto, President

Full name(s) and address(es) of Declarant(s)

of No. 23-17, Higashi-Yotsugi 1-chome
Katsushika-Ku, Tokyo, Japan

do solemnly and sincerely declare as follows:-

Full name(s) of Applicant(s)

~~1. I am/We are the applicant(s) for the patent~~

(or, in the case of an application by a body corporate)

1. I am/~~We are~~ authorised by

TAIYO KOGYO CO., LTD.

the applicant~~(s)~~ for the patent to make this declaration on its/~~their~~ behalf.

2. The basic application~~(s)~~ as defined by Section 141 of the Act was/~~were~~ made

Basic Country(ies): in Japan

Priority Date(s): on 28 May 1992

Basic Applicant(s): by TAIYO KOGYO CO., LTD.

~~3. I am/We are the actual inventor(s) of the invention referred to in the basic application(s)~~

Full name(s) and address(es) of inventor(s)

(or where a person other than the inventor is the applicant)

3. Shohei Suto

of No. 23-17, Higashi-Yotsugi 1-chome
Katsushika-Ku, Tokyo, Japan

(respectively)

is/~~are~~ the actual inventor~~(s)~~ of the invention and the facts upon which the applicant~~(s)~~ is/~~are~~ entitled to make the application are as follows:

Set out how Applicant(s) derive title from actual inventor(s) e.g. The Applicant(s) is/are the assignee(s) of the invention from the inventor(s)

The applicant is the assignee of the inventor Shohei Suto

4. The basic application~~(s)~~ referred to in paragraph 2 of this Declaration was/~~were~~ the first application~~(s)~~ made in a Convention country in respect of the invention~~(s)~~ the subject of the application.

Declared at Tokyo this 15 day of October 1992

for TAIYO KOGYO CO., LTD.

by .....

Signature of Declarant(s)

Shohei Suto President

SFP4

To: The Commissioner of Patents

1/81

AU9228140

(12) PATENT ABRIDGMENT (11) Document No. AU-B-28140/92
(19) AUSTRALIAN PATENT OFFICE (10) Acceptance No. 649385

(Modified Examination)

(54) Title
DRIVE UNIT OF VEHICLE TOY

International Patent Classification(s)
(51)[5] **A63H 029/22**

(21) Application No. : **28140/92** (22) Application Date : **04.11.92**

(30) Priority Data

(31) Number	(32) Date	(33) Country
4-160045	**28.05.92**	**JP JAPAN**

(43) Publication Date : **02.12.93**

(44) Publication Date of Accepted Application : **19.05.94**

(71) Applicant(s)
TAIYO KOGYO CO., LTD.

(72) Inventor(s)
SHOHEI SUTO

(74) Attorney or Agent
SPRUSON & FERGUSON , GPO Box 3898, SYDNEY NSW 2001

(57) Claim

1. A drive unit a vehicle toy, comprising:

a motor;

a motor gear driven in forward and reverse directions of rotation by said motor;

first and second drive gears for independently driving left and right wheels of the vehicle toy;

first and second intermediate gears for reducing in rotational speed with first and second drive gears;

an idle gear meshed with one of the said first and second intermediate gears to cause said first and second drive gears to be rotated in directions opposite to each other;

a travelling gear meshing with said motor gear and driven by said motor gear to travel along a path between a forward-drive position and a turn-drive position depending on the rotational direction of said motor gear;

said travelling gear being mounted to move along an arcuate path with gear means for selectively engaging one of said first and second drive gears and said first and second intermediate gears dependent upon motor direction;

said travelling gear directly driving both said first and second drive gears in the same direction at a first gear ratio in said forward-drive position; and

.../2

said travelling gear driving said first and second drive gears in opposite directions at a second gear ratio higher than said first gear ratio through said first and second intermediate gears and said idler gear in said turn-drive position to effect driving of the wheels through an increased reduction ratio during turning of the vehicle than when the vehicle is being driven forward.

649385

S & F Ref: 224279

AUSTRALIA

PATENTS ACT 1990

COMPLETE SPECIFICATION

FOR A STANDARD PATENT

ORIGINAL

Name and Address of Applicant: Taiyo Kogyo Co., Ltd.
No. 23-17, Higashi-Yotsugi 1-chome
Katsushika-Ku Tokyo
JAPAN

Actual Inventor(s): Shohei Suto

Address for Service: Spruson & Ferguson, Patent Attorneys
Level 33 St Martins Tower, 31 Market Street
Sydney, New South Wales, 2000, Australia

Invention Title: Drive Unit of Vehicle Toy

The following statement is a full description of this invention, including the best method of performing it known to me/us:-

P2108

DRIVE UNIT OF VEHICLE TOY

BACKGROUND OF THE INVENTION

Field of the Invention:

The present invention relates to a drive unit for driving wheels of a vehicle toy, and more particularly to a drive unit for controlling, in travelling, a vehicle toy such as tanks provided with caterpillars and like vehicles.

Description of the Prior Art:

In conventional remote-controlled vehicle toys, there are known vehicle toys such as tanks (war vehicles) provided with caterpillars (such as endless tracks and the like) and like vehicles. Since this vehicle toy travels by means of caterpillars running round front left-hand/right-hand and rear left-hand/right-hand wheels, a ground contact area of the vehicle is large to substantially prevent the vehicle from being stuck, and, therefore enable the same to perform off-road travelling on sands, grasslands and the like. Such vehicle toy provided with the caterpillars is provided with a drive mechanism for driving a left-hand and a right-hand wheel, respectively, and uses a zero turning radius system which uses a difference in rotation between the caterpillars when the vehicle makes a turn by having the left-hand and the right-hand rear wheel rotate in directions opposite to each other.

Since the conventional vehicle toy provided with the caterpillars drives its caterpillars, the vehicle has a large ground contact area resulting in a large frictional resistance. Particularly, when the vehicle makes a turn, a load on the vehicle becomes very large. Due to this, for example, even when the vehicle uses a high-performance motor and a high-power nickel-cadmium battery and the like, it suffers from poor torque when the vehicle employs a low gear ratio to realize a high-speed performance. On the other hand, when the vehicle employs a high gear ratio to realize a large-torque performance, it suffers from poor speed. Namely, in the conventional caterpillar vehicle toy, it is difficult to realize an adequate performance having high-speed performance and large-torque performance both compatible with each other. Further, should both high-speed and large-torque performances be simultaneously realized, the battery life would be extremely reduced, which would be very disadvantageous.

SUMMARY OF THE INVENTION

It is an object of the preferred embodiments of the present invention to provide a drive unit of a vehicle toy which makes it possible to have high-speed performance and large-torque performance compatible with each other.

It is a further object of the preferred embodiments of the invention to provide excellent operability, and to improve battery life.

According to one aspect of the present invention there is provided a drive unit of a vehicle toy having a motor gear driven by a radio-controlled motor, first and

second drive gears for independently driving a left wheel and a right wheel, respectively, first and second intermediate gears for reducing respectively the rotational speed of the first and second drive gears, and an idler gear meshed with the first or the second intermediate gear to have the first and second drive gear be driven in directions opposite to each other. A travelling gear is rotatably driven by the motor gear to travel along a path between a forward-drive position and a turn-drive position depending on the rotational direction of the motor, the travelling gear directly driving both the first and second drive gears in the forward-drive position and driving the same gears through the first and second intermediate gears and also the idler gear in the turning or turn-drive position.

Further, in another embodiment of the present invention, a rack which can mesh with the travelling gear is disposed in an intermediate position between the forward-drive and the turn-drive positions.

According to a preferred aspect of the present invention, the travelling gear while meshed with the motor gear: (i) travels along a path between the forward-drive position and the turn-drive position, depending on the rotational direction of the motor; (ii) meshes with the first and second drive gears in the forward-drive position to directly drive the same gears; and (iii) meshes with the first and second drive gears through the first and second intermediate gears and the idler gear in the turn-drive position to have the first and second drive gears be rotatably driven in directions opposite to each other respectively, so that the reduction gear ratio is increased by means of the first and second intermediate gears which make it possible for the reduction gear

ratio in the turn-drive position to become larger than that in the forward-drive position, whereby it is possible to realize high-speed performance in forward driving conditions and large-torque performance in turn conditions, and thereby enhancing operability and allowing the battery to have a longer life.

Further, by disposing the rack (which is meshed with the travelling gear) in the intermediate position between the forward-drive position and the turn-drive position, it is possible to forcibly move the travelling gear even when it is in a neutral condition, whereby the gears can be meshed without fail.

According to another aspect of the invention, there is provided a radio-controlled, battery-operated vehicle toy comprising a reversible electric motor having a motor gear rotatable about an axis, and right side and left side wheels independently driven by the motor via gearing. The gearing includes a travelling gear in mesh with the motor gear and movable around the motor gear along an arcuate path concentric with said axis. The travelling gear is driven along said path between a forward-drive position and a turn-drive position by the motor gear in dependence upon the direction of rotation of the reversible motor. The right side and left side wheels are rotated in the same direction via the gearing when the travelling gear is in the forward-drive position, and the right side and left side wheels are rotated in opposite directions via the gearing when the travelling gear is in the turn-drive position.

Other objects, features and advantages of the present invention will become more fully apparent from the

following detailed description of the preferred embodiments, the appended claims and the accompanying drawings.

BRIEF DESCRIPTION OF THE DRAWINGS

In the accompanying drawings:

Fig. 1 is an exploded perspective view of the working parts of the drive unit of a first embodiment of the present invention, indicating the alternative meshing conditions of the gears of the unit;

Fig. 2 is a left side view of a vehicle toy of the present invention embodying the drive unit of Fig. 1;

Fig. 3 is a plan view of the vehicle toy of Fig. 2;

Fig. 4 is a plan view of the drive unit of Fig. 1;

Fig. 5 is a front view of the drive unit of Fig. 4, looking in the direction of the arrow E in Fig. 4;

Fig. 6 is an exploded perspective view of the above drive unit;

Fig. 7 is an exploded perspective view of the motor and the gears in the right-hand casing of the drive unit shown in Fig. 6;

Fig. 8 is an exploded perspective view of the gears in the left-hand casing of the drive unit shown in Fig. 6, but turned through 180 degrees from the orientation in Fig. 6;

Fig. 9 is a perspective view of the travelling gear portion of the above drive unit illustrating the mounting of the travelling gear assembly;

Fig.10 is a side view, from the right side, of the travelling gear portion of the above drive

unit illustrating the shifting of the travelling gear assembly between two operating positions;

Fig.11 is a side view, from the left side, of the drive unit illustrating the meshing of gears for driving the right-hand wheel in the forward direction;

Fig.12 is a side view, from the left side, of the drive unit illustrating the meshing of gears for driving the left-hand wheel in the forward driving direction;

Fig.13 is a side view illustrating meshing of the gears for driving the right-hand wheel in a turning operation of the vehicle toy;

Fig.14 is a side view of the meshing of the gears for driving the left-hand wheel in the turning operation;

Fig.15 is a side view of the drive unit of another embodiment of the present invention;

Fig.16 is a partial side view, on a larger scale, of a rack of the drive unit of Fig. 15; and

Figs.17(a), 17(b) and 17(c) are partial side views of the rack of the drive unit of Figs. 15 and 16 illustrating a gear shifting operation starting from the forward driving condition through a neutral condition to the vehicle turning condition.

DETAILED DESCRIPTION OF THE PREFERRED EMBODIMENTS

The present invention will first be described with reference to the embodiment thereof shown in Figs. 1 to 14 in which Fig. 2 is a side view of a radio-controlled, battery-operated vehicle toy of the present invention, and Fig. 3 is a plan view of this vehicle toy. There-

after, the further embodiment illustrated in Figs. 15 to 17 will be described.

The toy vehicle has a front, a rear, a right-hand side and a left-hand side. In Figs. 2 and 3, the front is to the left and the rear is to the right. In Fig. 3, the right-hand side is to the top, and the left-hand side is to the bottom; whereas in Fig. 6, the right-hand side is to the left top corner, and the left-hand side is to the bottom right corner.

The vehicle toy is provided with a body 10 which forms an upper vehicle body made of molded plastics or the like. A chassis portion 12 forms a lower vehicle body and is also made of molded plastics or the like and supports the upper body portion 10. The body 10 and the chassis portion 12 are so formed as a whole as to simulate in shape a real vehicle, such as a car or the like, for travelling at high-speed. Contained in the interior thereof is an electric motor 42, a printed circuit board having a receiving circuit of a radio control, and a battery for supplying electric power to the receiving circuit and the motor 42. The motor 42 is reversible, and is radio controlled by a radio transmitter located remote from the vehicle toy and controlled by an operator. The operator can stop and start the motor, and cause the motor to rotate in either direction of rotation. In a rear portion of this chassis portion 12, there is provided a drive unit 14 which includes the motor 42 and a transmission mechanism to be described later. A front left-hand wheel 16a and a front right-hand wheel 16b are rotatably mounted respectively on a left and a right end portion of a front axle shaft 18 provided in a front portion of the chassis portion 12. A rear left-hand wheel 20a and a

rear right-hand wheel 20b are mounted respectively on an end portion of a left-hand drive shaft 56 and an end portion of a right-hand drive shaft 40. The shafts 56, 40 extend from left and right side surfaces of the drive unit 14, respectively. A left-hand 22a and a right-hand 22b caterpillar or endless track, made for example of rubber or the like, are respectively trained around and run around the front and rear left-hand wheels 16a, 20a and the front and rear right-hand wheels 16b, 20b as shown in Figs. 2 and 3.

As shown in Figs. 4 to 10, the drive unit 14 has a mechanism in which a torque developed in a radio-controlled power source or motor 42 is transmitted to left-hand and right-hand gear trains which each have their final drive gear as a separate power output. The right-hand drive unit casing 24 contains the motor 42 and the gears for driving the rear right-hand wheel 20b. The left-hand drive unit casing 26 contains the gears and the like for driving the rear left-hand wheel 20a. A casing spacer 28 is interposed between the casings 24 and 26.

Integrally formed with the right-hand casing 24 are a gear housing portion 24a which is open at the left side, a motor housing portion 24b formed in an upper portion of this gear housing portion 24a, and a shaft guide portion 24c horizontally extending rightward from the right side of the gear housing portion 24a. In the portion 24a, there are disposed a first intermediate gear 30, an idler gear 32, and a first drive gear 34. As shown in Fig. 1, the first intermediate gear 30 is constructed of a large-diameter gear 30a with a large number of teeth and a small-diameter gear 30b with a smaller number of teeth, the gears 30a, 30b being

coaxially and integrally formed. The first intermediate gear 30 and the idler gear 32 are rotatably mounted on shafts 36 and 38, respectively. The shafts 36, 38 each have an end portion fixedly mounted in a separate boss integrally formed with an inner wall of the gear housing portion 24a in projecting manner. The first drive gear 34 is fixedly mounted on an end portion of the drive shaft 40, the other end portion (right-hand end portion) which horizontally extends rightward to have the rear right-hand wheel 20b fixedly mounted on the extended end portion, as indicated in Fig. 6. The other end portions (left-hand end portions) of the shafts 36, 38 and of the drive shaft 40 are rotatably supported on bearing portions of the casing spacer 28, the bearing portions being formed in positions corresponding to those of the left-hand end portions of these shafts 36, 38, 40. As is clear from Figs. 1 and 7, the motor 42 has the motor gear 44 fixedly mounted on its output shaft 42a, and is received in the motor housing portion 24b in a manner such that the motor gear 44 looks toward an inside of the gear housing portion 24a. A cover 46 (Fig. 7) is mounted on a right-hand opening portion of the motor housing portion 24b by means of screws 47 or like fasteners. Incidentally, meshing conditions of the gears will be described later.

Integrally formed with the left-hand casing 26 are a gear housing portion 26a which is open at one side (right-hand side) and a shaft guide portion 26b horizontally extending leftward from the left-hand side of this gear housing portion 26a. In this gear housing portion 26a, there are disposed a travelling gear 48, a second intermediate 50 and a second drive gear 52. The second intermediate gear 50 is constructed of a large-diameter gear 50a with a large number of teeth and a

small-diameter gear 50b with a small number of teeth, the gears 50a, 50b being coaxially and integrally formed. The second intermediate gear 50 is rotatably mounted on a shaft 54 which has one end fixedly mounted in a boss of the gear housing portion 26a, the boss being so formed on an inner wall of the gear housing portion 26a as to extend rightward from the inner wall. The second drive gear 52 is fixedly mounted on one end portion of the drive shaft 56. The other end portions (right end portions) of these shafts 54, 56 are rotatably supported in bearing portions of the casing spacer 28 (Fig. 6), these bearing portions being formed in positions corresponding to those of the right end portions of these shafts 54, 56. The travelling gear 48 is constructed of a planetary gear 58, two first travelling gears 59a, 59b, and two second travelling gears 60a, 60b. The planetary gear 58 travels in mesh with the motor gear 44. The two first travelling gears 59a, 59b are of different sizes and are coaxially and integrally formed with the planetary gear 58 at one side of the gear 58. The gears 59a and 59b are both smaller than the gear 58 with the gear 59a being larger than the small gear 59b. The two second travelling gears 60a, 60b are likewise of different sizes, are also coaxially and integrally formed with the planetary gear 58 but at the other side thereof, with the gear 60a being larger in diameter than the gear 60b, as shown in Fig. 9. The travelling gear 48, or more accurately the travelling gear assembly 48, is rotatably mounted on a shaft 64 which is horizontally fixedly mounted on a free end portion of an arm 62. The other end portion of the arm 62 is rotatably mounted on a shaft 66 mounted in an inner wall of the left-hand casing 26 in projecting manner so as to be coaxial with the motor gear 44. Further, as is clear from Figs. 9 and 10, the arm 62 is

so arranged as to be swingable between a vertical line A and an obliquely inclined line B inclined at an angle of, for example, about 38 degrees relative to the vertical line A. The lines A, B are defined respectively by stops 68 formed on an inner wall of the left-hand casing 26.

As is clear from Fig. 6, the casing spacer 28 is so formed as to cover the opening areas of both the right-hand casing 24 and the left-hand casing 26. In opposite side surfaces of the spacer 28, there are formed the bearing portions for supporting the other end portions of the above-mentioned shafts. A central opening 28a in the spacer 28 is sized to permit both the motor gear 44 and the travelling gear assembly 48 (which is swingable about the motor gear 44) not to contact the spacer 28. As shown in Fig. 6, when assembling, the right-hand casing 24 containing the motor 42, and the gears therein and the left-hand casing 26 containing the gears, have their opening portions looking towards each other with the spacer 28 interposed therebetween, and then are fixed to each other by means of screws 70 or like fasteners.

Fig. 1 is a perspective view illustrating the meshing conditions of the gears of the drive unit. The motor gear 44, fixedly mounted on the motor output shaft 42a looks toward the opening portion 28a (Fig. 6) of the casing spacer 28 from the open side of the right-hand casing 24. The gear 44 meshes with the planetary gear 58 of the travelling gear assembly 48. The travelling gear assembly 48 is also rotatably accommodated in the open side of the left-hand casing 26. Since the travelling gear assembly 48 is pivotal about the shaft 66 coaxial with the motor gear 44, the gear assembly 48 is

swingable with the planetary gear 58 always in mesh with the motor gear 44. The travelling assembly gear 48 has its first larger diameter travelling gear 59a directly meshed with the first drive gear 34 when the arm 62 abuts one of the stops 68 so as to be positioned on the vertical line A at a position F as shown in Fig. 10; at the same time, the travelling gear 48 has its second larger diameter travelling gear 60a directly in mesh with the second drive gear 52.

On the other hand, when the arm 62 is pivoted to abut the other stop 68 so as to be positioned on the oblique line B at a position R thereon as shown in Fig. 10, the travelling gear assembly 48 has its first smaller diameter travelling gear 59b in mesh with the large-diameter gear 30a of the first intermediate gear 30, and at the same time the second smaller diameter travelling gear 60b meshes with the large-diameter gear 50a of the second intermediate gear 50. Further, the small-diameter gear 30b, with the smallest number of teeth of the first intermediate gear 30, is meshed with the first drive gear 34 through the idler gear 32, and the small-diameter gear 50b of the second intermediate gear 50 is directly meshed with the second drive gear 52.

Thus, when an axis of the travelling gear assembly 48 is positioned on the vertical line A at the position F, the torque developed in the motor 42 is transmitted to the planetary gear 58 of the travelling gear assembly 48 through the motor gear 44, and then at this point split into two parts, one of the two parts being directly transmitted to the first drive gear 34 through the first travelling gear 59a, and the other of the two parts being directly transmitted to the second drive gear 52 through the second travelling gear 60a.

On the other hand, when the axis of the travelling gear assembly 48 is positioned on the oblique line B at the position R, the torque developed in the motor 42 is transmitted to the planetary gear 58 of the travelling gear assembly 48 through the motor gear 44, and then at this point split into two parts. One of these two parts is transmitted to the first drive gear 34 through the first travelling gear 59b, large-diameter gear 30a, small-diameter gear 30b and the idler gear 32. The other of the two parts is directly transmitted to the second drive gear 52 through the second travelling gear 60b, large-diameter gear 50a and the small-diameter gear 50b.

In the embodiment of the present invention described above, a preferred number of teeth of the gears are, for example, as follows: 8 teeth for the motor gear 44; 32 teeth for the planetary gear 58; 12 teeth for each of the first and the second larger travelling gears 59a, 60a; 8 teeth for each of the first and the second smaller travelling gears 59b, 60b; 32 teeth for each of the first and the second intermediate gears 30a, 50a; 17 teeth for each of the first and the second smaller intermediate gears 30b, 50b; 21 teeth for the idler gear 32; and 42 teeth for each of the first and the second drive gears 34, 52.

Now, the drive unit of the above embodiment will be described in operation. Figs. 11 and 12 illustrate the meshing conditions of the gears for driving the rear right-hand wheel and the rear left-hand wheel, respectively, in forward driving. Figs. 13 and 14 illustrate the meshing conditions of the gears for driving the rear right-hand wheel and the rear left-hand wheel, respectively, during a turning operation. Incidentally, all

of these drawings show the meshing conditions of the gears as viewed from the left-hand side, *i.e.* the side of the rear left-hand wheel 20a.

As shown in Figs. 11 and 12, when the motor gear 44 driven by the motor 42 rotates in a direction indicated by arrow C, *i.e.* counterclockwise in the drawings, the axis of the planetary gear 58 is moved to a forward position, *i.e.* position F on the vertical line A (shown in Fig. 10) under the influence of the torque exerted by the motor gear 44, so that the large-diameter gears 59a and 60a (each of which has the large number of teeth) are directly meshed with the first drive gear 34 and the second drive gear 52, respectively. In this forward position F, the travelling gear assembly 48 is restricted in movement because the pivotal arm 62 abuts against one of the stops 68. Consequently, the torque developed in the motor 42 is sequentially transmitted to the motor gear 44, planetary gear 58, travelling gears 59a and 60a, and the first and second drive gears 34, 52 to have these drive gears 34, 52 rotate in the same direction. The torque of the first 34 and second 52 drive gears is transmitted to the rear right-hand wheel 20b and the rear left-hand wheel 20a through the drive shafts 40 and 56, respectively, so that both the left-hand 22a and right-hand 22b caterpillars are driven in the same forward direction. The reduction ratio of the gears in this forward driving mode is 1/14 in the embodiment of the invention described above. Position F on line A represents the forward-drive position.

As shown in Figs. 13 and 14, when the motor gear 44 driven by the motor 42 rotates in a direction indicated by arrow D, *i.e.* clockwise in the drawings, a central axis of the planetary gear 58 is moved to a turn posi-

tion, *i.e.* position R on the oblique line B (shown in Fig. 10) under the influence of the torque exerted by this motor gear 44, so that the travelling gears 59b and 60b are meshed with the first and the second intermediate gears 30a and 50a, respectively. In this turn position R, the travelling gear assembly 48 is restricted in movement because the arm 62 abuts against the other of the stops 68. Consequently, the torque developed in the motor 42 is transmitted to the motor gear 44, the planetary gear 58, and the travelling gears 59b and 60b having the small number of teeth. Further, one of the split parts of the torque is sequentially transmitted to the large-diameter gear 30a, the small-diameter gear 30b, idler gear 32, and the first drive gear 34. While the other of the split parts of the torque is sequentially transmitted to the large-diameter gear 50a, the small-diameter gear 50b, and the second drive gear 52, whereby the second drive gear 52 is rotated in a direction opposite to that of the first drive gear 34. As is clear from Fig. 6, torque of the first drive gear 34 and the second drive gear 52 is transmitted to the rear right-hand wheel 20b and the rear left-hand wheel 20b through the drive shafts 40 and 56, respectively, so that the left-hand 22b and the right-hand 22a caterpillars are driven in directions opposite to each other so causing the vehicle toy to make a right turn on the spot where it stands. The reduction gear ratio in this on-the-spot turning mode is 1/39.5 in the embodiment of the present invention described above. Position R on line B represents the turn-drive position.

In the above construction, when the motor 44 is rotated in the forward direction, the travelling gear assembly 48 is directly meshed with the first and the second

drive gears 34, 52 under the influence of the torque exerted by the motor gear 44 on the planetary gear 58, so that the drive gears 34, 52 rotate in the same direction. On the other hand, when the motor 44 is rotated in the reverse direction to effect the turning mode, the travelling gear assembly 48 is meshed with the first and second intermediate gears 30, 50 under the influence of the torque exerted by the motor gear 44 on the travelling gear assembly 48, and with the gear 30 meshed with the idler gear 32, the first drive gear 34 is rotated in a direction opposite to that of the second drive gear 52. Consequently, when the vehicle toy makes a turn, it is possible for the vehicle toy to increase the reduction ratio of the drive unit by means of the first and the second intermediate gears 30 and 50, thus making it possible to effect a turn with the reduction gear ratio higher than that used in the forward driving. Because of the above, it is possible for the vehicle toy to increase the reduction ratio of the drive unit so as to obtain a large torque withstanding a turn load (which is a problem for conventional vehicle toys provided with caterpillars), whereby the driving power can be effectively transmitted to the left-hand caterpillar 22a and the right-hand 22a caterpillar. At the same time, by reducing the turn speed with the increased reduction ratio, it is possible for the vehicle toy to improve its performance in directionality and in operability. In addition, it is possible for the vehicle toy to improve its battery life. Although the conventional vehicle toy provided with caterpillars exclusively uses a nickel-cadmium battery in general, by using the transmission mechanism of this new drive unit 14, it is possible for the vehicle toy of the present invention to realize a more powerful performance with the use of the nickel-cadmium battery and also possibly to enjoy a sufficient

performance even when a manganese battery is used. Further, in the embodiment of the present invention described above, by simply controlling the motor 44 so as to rotate in a forward direction, rotate in the reverse direction, and to stop, it is possible to control the vehicle toy to move forward, make a turn, and stop, respectively. In the radio-controlled transmitter for the vehicle toy, it is possible to perform all controls of the vehicle toy by operating a single lever, which makes it possible to simplify the transmitter circuit and the vehicle toy receiver circuit. Further, it is possible to eliminate a special steering mechanism for the vehicle toy so simplifying the toy in mechanism.

Fig. 15 illustrates the drive unit of another embodiment of the present invention. Fig. 16 illustrates the details of a rack portion of the drive unit of Fig. 15, and Fig. 17 represents sequential steps in changing from forward drive to turn. Parts corresponding to those of the above-described embodiment are denoted by the same reference characters.

Figs. 15 and 16 show a neutral position in which the travelling gear assembly 48 is not meshed with any gears when the travelling gear assembly 48 travels in a path between the forward position and the turn position. There is provided a rack 80 which meshes with any one of the gears of the travelling gear assembly 48, for example such as the planetary gear 58, or any one of the travelling gears 59a, 59b, 60a and 60b. The rack 80 is, for example, integrally formed with the inner wall of the gear housing portion 24a of the right-hand casing 24 and meshes, for example, with the travelling gear 59a. The rack 80 has, for example, two teeth, the center root

between these teeth being disposed at a midway position which is half (about 19 degrees) of the swing angle (38 degrees) defined between the forward position A and the turn position B. The remaining construction is the same as that of the above described embodiment.

Figs. 17(a), 17(b) and 17(c) illustrate operations starting from forward driving to reach the turn operation.

First, as shown in Fig. 17(a), in a condition in which the travelling gear assembly 48 is in the forward position, when the motor gear 44 driven by the motor 42 is rotated in the turn direction, *i.e.* direction D, the travelling gear assembly 48 begins to travel in the same direction D as that of the motor gear 44. Then, as shown in Fig. 17(b), when the travelling gear assembly 48 reaches its neutral position (as in Fig. 15), the travelling gear assembly 48 is completely de-meshed from the first and second drive gears 34, 52 and has its travelling gear 59b meshed with the rack 80; this meshing of the rotating gear 59b with the stationary rack 80 then forcibly drives the travelling gear assembly 48 along an arc forwardly towards the turn position B. Finally, as shown in Fig. 17(c), the travelling gear assembly 48 having been pushed forwardly by the rack 80 then meshes with the first and second intermediate gears 30, 50, which enables the vehicle toy to shift without fail from forward driving to the turn operation (with one caterpillar being driven forwardly and the other in reverse).

When the operation of the vehicle toy shifts from the turn operation to forward driving, the above operations of Fig. 17 are performed in reverse sequence.

In the construction just described above, when the travelling gear assembly 48 travels arcuately in the shifting operation, as the rack 80 is disposed in the neutral position, this rack 80 meshes with the travelling gear assembly 48 and forcibly pushes the latter outward to ensure that the shifting operation is smoothly performed without fail. Without the rack 80 there could be the following disadvantages that: when the operation of the vehicle toy shifts to the forward driving or to the turn operation, *i.e.* when it is tried to have the first 34 and second 52 drive gears (which are rotated in directions opposite to each other) or the first 30 and the second 50 intermediate gears mesh with the travelling gear assembly 48 under the influence of the torque developed in the motor 42, the gears may fail to be meshed with the travelling gear assembly 48 since the gears are different in rotational direction from each other and therefore may repel each other; and a long period of time may be required before rotational speeds of the first and second intermediate gears 30, 50 are so decreased as to make it possible to have the gears mesh with each other, which may cause the vehicle toy to perform unnatural operations such as overrunning under the influence of inertia and like operations. As a countermeasure to such problems, there is a method for having a planetary gear biased by means of a compression spring in a transmission mechanism (which uses the planetary gear) so as to have the gear be readily swung in the rotational direction under the influence of the torque developed in the motor. However, this method is poor in reliability in gear-meshing operation, and, therefore it is not adequate for gears being rotated at a high speed. Further, in the above method, there is employed a biasing force which results in disadvantages such as a speed loss, electric-current loss and shor-

tened battery life. In the embodiments of the present invention described above, the provision of the rack 80 enables the shifting operation to be performed without fail and the driving operation to be appropriate and natural.

In the above embodiments of the present invention, although a vehicle toy provided with caterpillars has been described as an example, it is also possible to use the drive unit having the above construction as a drive unit for a conventional four-wheeled vehicle toy. Further, although the example in which the rear left-hand and the rear right-hand wheel are driven has been described, the drive unit performs the same action as that of the above when it drives a front left-hand and a front right-hand wheel.

Further, in each of the above described embodiments, it is sufficient for the present invention to construct the travelling gear assembly 48 so as to have the same travel along a path between the forward position and the turn position under the influence of at least the motor gear 44 driven by the motor 42, directly drive the drive gears 34, 52 in the forward position, and drive the drive gears 34, 52 through the intermediate gears 30, 50 and the idler gear 32 in the turn position. It is also sufficient for the present invention that when the travelling gear assembly 48 is moved to the turn position, the compound gear 48 is meshed with gears such as the intermediate gears 30, 50 and the like to have the reduction ratio of the gears larger than that in the forward drive position, and use the idler gear 32 in mesh between the gears to have the gears rotate in directions opposite to each other. Consequently, there is no limitation in the arrangement of the gears, the

number of the gears, and in the number of teeth of each gear.

Further, although the motor 42 is disposed in the side of the right-hand casing 24 in the above embodiments, it is also possible to dispose the motor 42 in the side of the left-hand casing 24. Further, in the above embodiments, although the example of the right turn has been described, it is alternatively feasible to arrange for a left turn.

Furthermore, although the example of a rack 80 with two teeth has been described, it is also possible for the rack 80 to have any desired number of teeth, provided that the rack 80 with such desired number of teeth can forcibly push the travelling gear 49 out of the neutral position.

As described above, according to the present invention, the travelling gear arrangement meshed with the motor gear travels along a path between the forward position and the turn position depending upon the rotationsl direction of the motor so that (i) in the forward position, the travelling gear is meshed with the first and second drive gears to directly drive the same; and (ii) in the turn position, the travelling gear is meshed with the first and second drive gears through the first and second intermediate gears and the idler gear to have the first and second drive gears rotate in directions opposite to each other, whereby the reduction ratio of the gears increases by means of the first and second intermediate gears to realize a lower-speed gearing in the turn operation than the gearing in the forward driving. This, therefore, realizes a high-speed performance in the forward driving and a large-torque perfor-

mance in the turn operation to improve the vehicle toy in operability and in battery life. Further, by using the rack (which is meshed with the travelling gear assembly) in an intermediate position between the forward position and the turn position, it is possible for the travelling gear assembly to be forcibly moved outward even when the travelling gear assembly is in the neutral position, which makes it possible to have the gears mesh with each other without fail.

The above described embodiments, of course, are not to be construed as limiting the breadth of the present invention. Modifications, and other alternative constructions, will be apparent which are within the spirit and scope of the invention as defined in the appended claims.

The claims defining the invention are as follows:

1. A drive unit a vehicle toy, comprising:

a motor;

a motor gear driven in forward and reverse directions of rotation by said motor;

first and second drive gears for independently driving left and right wheels of the vehicle toy;

first and second intermediate gears for reducing in rotational speed with first and second drive gears;

an idle gear meshed with one of the said first and second intermediate gears to cause said first and second drive gears to be rotated in directions opposite to each other;

a travelling gear meshing with said motor gear and driven by said motor gear to travel along a path between a forward-drive position and a turn-drive position depending on the rotational direction of said motor gear;

said travelling gear being mounted to move along an arcuate path with gear means for selectively engaging one of said first and second drive gears and said first and second intermediate gears dependent upon motor direction;

said travelling gear directly driving both said first and second drive gears in the same direction at a first gear ratio in said forward-drive position; and

said travelling gear driving said first and second drive gears in opposite directions at a second gear ratio higher than said first gear ratio through said first and second intermediate gears and said idler gear in said turn-drive position to effect driving of the wheels through an increased reduction ratio during turning of the vehicle than when the vehicle is being driven forward.

2. The drive unit of claim 1, further comprising a fixed arcuate rack disposed in an intermediate position between said forward-drive position and said turn-drive position, said travelling gear meshing with an engaging said rack as said travelling gear travels along said path.

3. The drive unit of claim 1, wherein said travelling gear is mounted on an arm pivotal about said motor gear.

4. A drive unit of a vehicle toy, comprising:

a motor;

AUSTRALIA PATENT OFFICE

a motor gear driven in forward and reverse directions of rotation by said motor;

first and second drive gears for independently driving left and right wheels of the vehicle toy;

first and second intermediate gears for reducing in rotational speed said first and second drive gears;

idle gear meshed with one of said first and second intermediate gears to cause said first and second drive gears to be rotating in directions opposite to each other;

a travelling gear meshing with said motor gear and driven by said motor gear to travel along a path between a forward-drive position and a turn-drive position depending on the rotational direction of said motor gear;

said travelling gear directly driving both said first and second drive gears in said forward-drive position;

said travelling gear driving said first and second drive gears through said first and second intermediate gears and said idler gear in said turn-drive position; and

said travelling gear comprising a planetary gear in constant mesh with said first motor gear, and two further gears on each side of the coaxial with said planetary gear, said further gears moving into and out of mesh with said drive gears and said intermediate gears.

5. A vehicle toy, comprising:

a body with left and right wheels mounted respectively on left and right sides of said body;

a reversible motor;

a motor gear driven by said motor;

first and second drive gears for independently driving the left and right wheels;

first and second intermediate reduction gears connected to said first and second drive gears respectively;

an idler gear meshed with one of said first and second intermediate gears to enable said first and second drive gears to be rotated via said intermediate gears in directions opposite to each other;

AUSTRALIA PATENT OFFICE
WIS/7668F

a travelling gear arrangement with gear means in constant mesh with said motor gear and driven by said motor gear to travel in either direction along an arcuate path between a forward-drive position and a turn-drive position depending on the rotational direction of said reversible motor;

said travelling gear arrangement being mounted on a swing arm;

said travelling gear arrangement driving said first and second drive gears in the same rotational direction when in said forward-drive position;

said travelling gear arrangement when in said turn-drive position, driving said first and second drive gears in opposite rotational directions through said first and second intermediate gears and said idler gear; and

said travelling gear arrangement gear means when in said turn-drive position driving said first and second drive gears via said intermediate reduction gears as a higher reduction ratio than when in said forward-drive position, said intermediate reduction gears being inoperative in driving said first and second gears in said forward-drive position.

6. A vehicle toy, comprising:

a body with left and right wheel mounted respectively on left and right sides of said body;

a reversible motor;

a motor gear driven by said motor;

first and second drive gears for independently driving the left and right wheels;

first and second intermediate gears connected to said first and second drive gears, respectively;

an idler gear meshed with one of said first and second intermediate gears to enable said first and second drive gears to be rotated in directions opposite to each other;

a travelling gear arrangement in constant mesh with said motor gear and driven by said motor gear to travel in either direction along an arcuate path between a forward-drive position and a turn-drive position depending on the rotational direction of said reversible motor;

PATENT OFFICE

said travelling gear arrangement driving said first and second drive gears in the same rotational direction when in said forward-drive position;

said travelling gear arrangement, when in said turn-drive position, driving said first and second gears in opposite rotational directions through said first and second intermediate gears and said idler gear; and

a toothed rack fixedly disposed in an intermediate position between said forward-drive position and said turn-drive position, said travelling gear assembly meshing with said rack as said travelling gear travels along said path.

7. The vehicle toy of claim 6, wherein said motor gear is rotatable about a central axis, said rack is arcuate, and said path and said rack are concentric about said axis.

8. The vehicle toy of claim 6, further comprising left and right endless tracks driven by said left and right wheels, respectively.

9. The vehicle toy of claim 6, wherein said travelling gear assembly pivots about said motor gear between two slots which determine said forward-drive and turn-drive positions.

10. A vehicle toy, comprising:

a body with left and right wheels mounted respectively on left and right side of said body;

a reversible motor;

a motor gear driven by said motor;

first and second drive gears for independently driving the left and right wheels;

first and second intermediate gears connected to said first and second drive gears, respectively;

an idler gear meshed with one of said first and second intermediate gears to enable said first and second drive gears to be rotated in directions opposite to each other;

a travelling gear arrangement in constant mesh with said motor gear and driven by said motor gear to travel in either direction along an arcuate path between a forward-drive position an a turn-drive position depending on the rotational direction of said reversible motor;

said travelling gear arrangement driving said first and second drive gears in the same rotational direction when in said forward-drive position;

said travelling gear arrangement, when in said turn-drive position, driving said first and second drive gears in opposite rotational directions through said first and second intermediate gears and said idler gear; and

said travelling gear assembly comprising a central planetary gear in mesh with said motor gear, two first reduction gears coaxially disposed on one side of said planetary gear, and two second reduction gears coaxially disposed on the opposite side of said planetary gear.

11. The vehicle toy of claim 10, wherein said two first reduction gears are respectively brought into mesh with said first drive gear in said forward-drive position and said first intermediate gear in said turn-drive position, and said two second reduction gears are respectively brought into mesh with the said second drive gear in said forward-drive position and said second intermediate gear in said turn-drive position.

12. The vehicle toy of claim 11, wherein two first reduction gears are of different sizes, and two second reduction gears are the same size as the two first reduction gears, the reduction ratio between said motor gear and each drive gear being greater in said turn-drive position for turning said vehicle toy than in said forward-drive position for driving said vehicle toy forward.

13. The vehicle toy of claim 10, wherein said motor is radio controlled.

DATED this EIGHTEENTH day of JANUARY 1993

Taiyo Kogyo Co., Ltd.

Patent Attorneys for the Applicant

SPRUSON & FERGUSON

wls/7668F

ABSTRACT

DRIVE UNIT OF VEHICLE TOY

A drive unit (14) of a vehicle toy (10) realizes a high-speed performance and a large-torque performance, is excellent in operability and provides improved battery life. In the drive unit (14), there are provided a motor gear (44) driven by a radio-controlled motor (42), first and second drive gears (34, 52) for independently driving left-hand and right-hand wheels (20a, 20b), first and second intermediate gears (30, 50) for causing the first and second drive gears (34, 52) to rotate at a lower speed, and an idler gear (32) meshing with one of the intermediate gears to cause the first and second drive gears (34, 52) to rotate in opposite directions. A travelling gear assembly (48) is rotatably driven by the motor gear (44) to travel along a path between a forward position (F) for forward vehicle toy drive and a turn position (R) for vehicle toy turning, the travelling gear assembly (48) directly driving the first and second drive gears (34, 52) in the forward position and driving the same gears through the first and second intermediate gears (30, 50) and the idler gear (32) in the turn position.

(Fig. 1)

FIG. 1

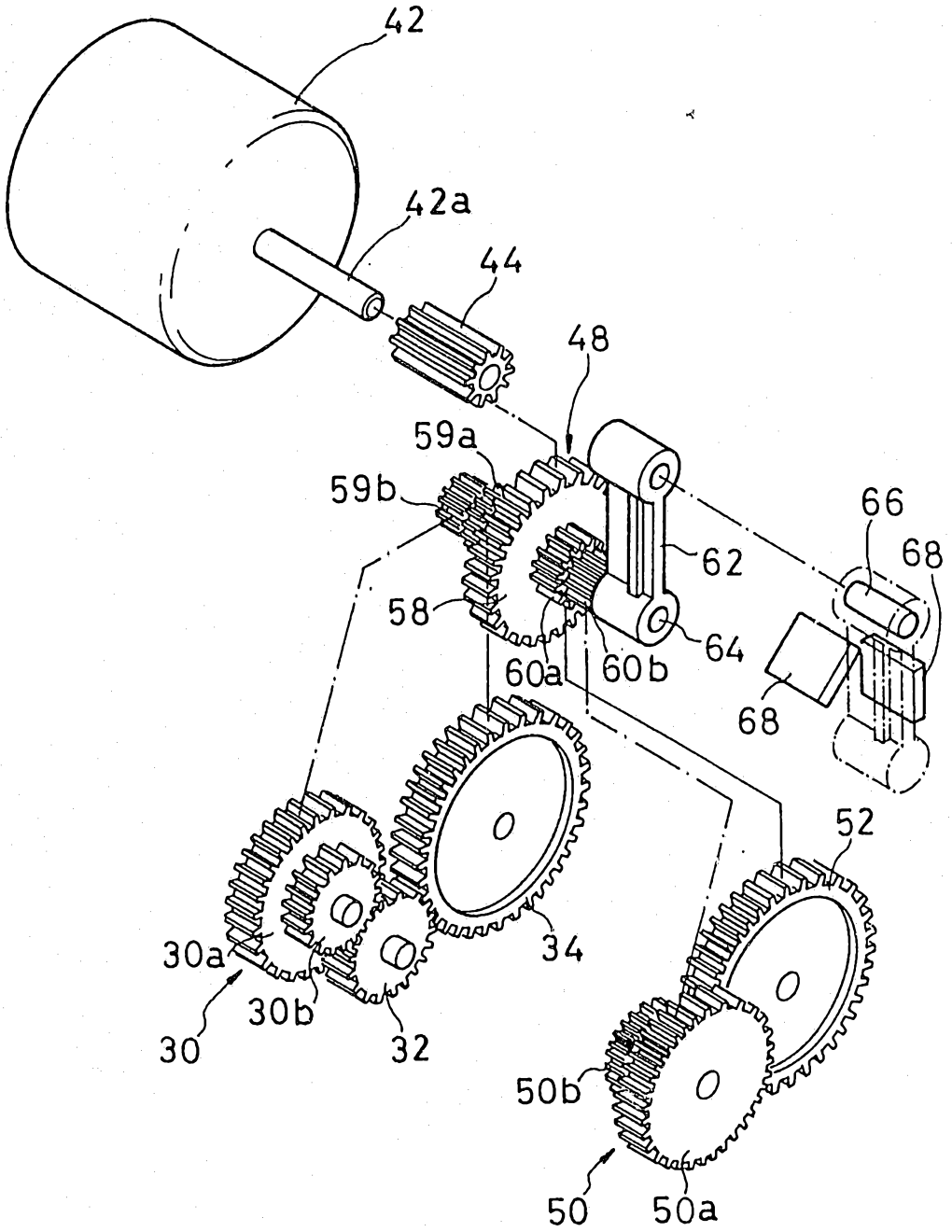
42
42a
44
48
59a
59b
58
60a
60b
62
64
66
68
68
52
34
30a
30b
30
32
50b
50
50a

FIG. 2

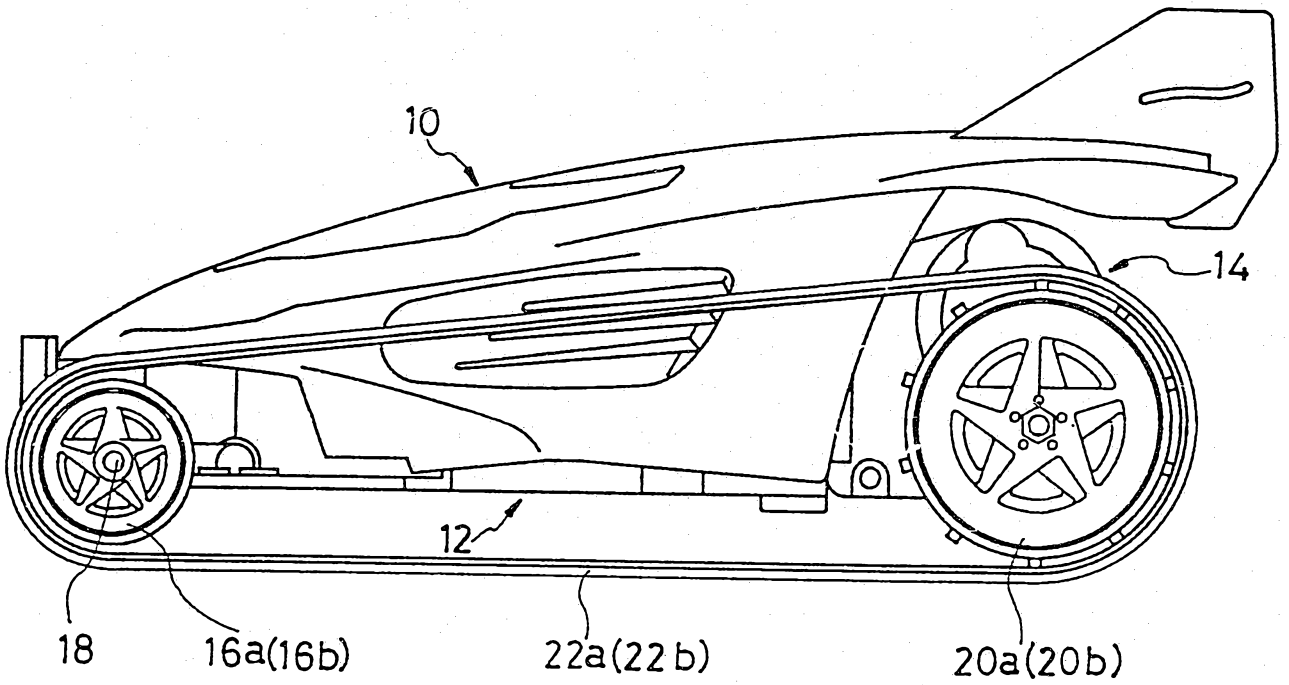

4 11 92 28140

FIG. 3

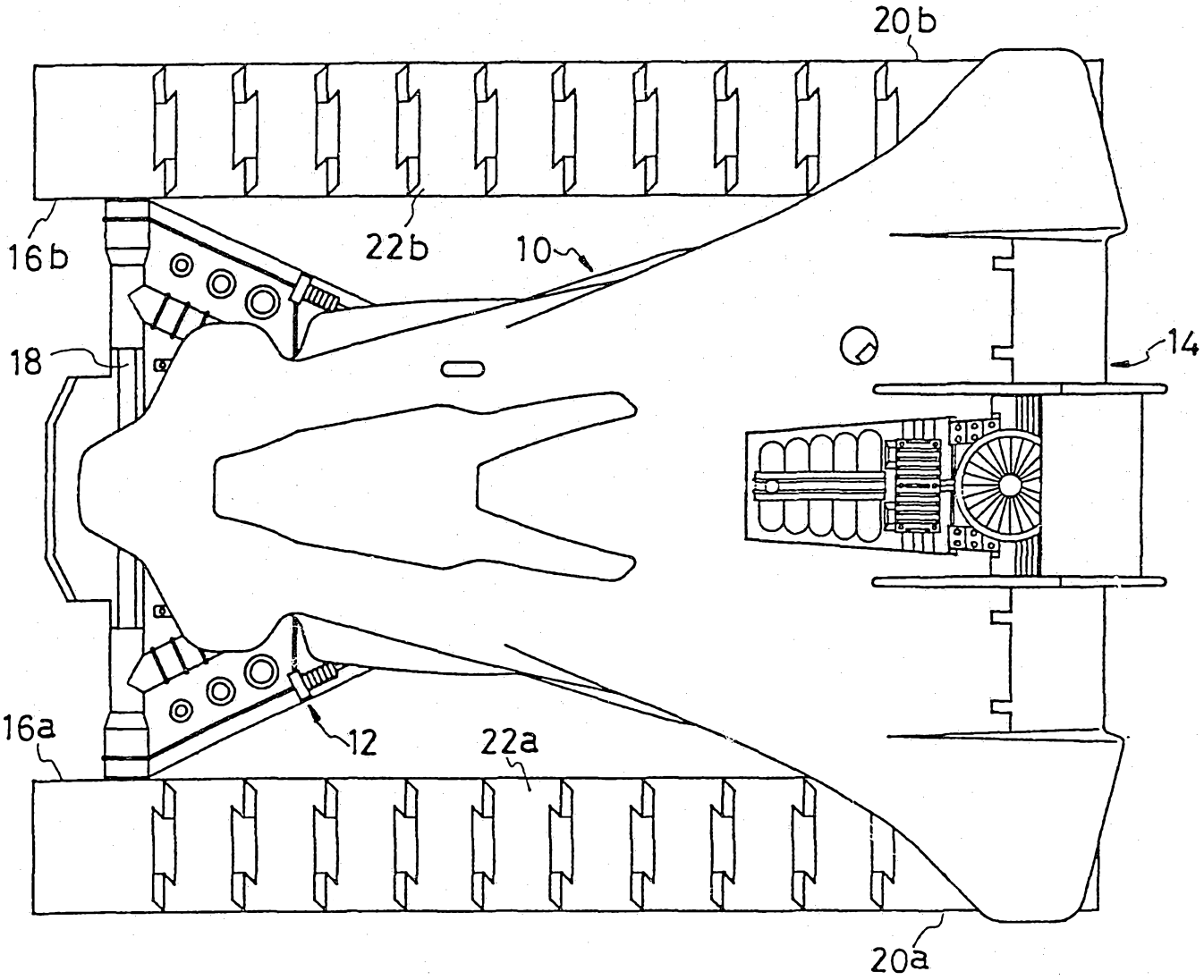

FIG. 4

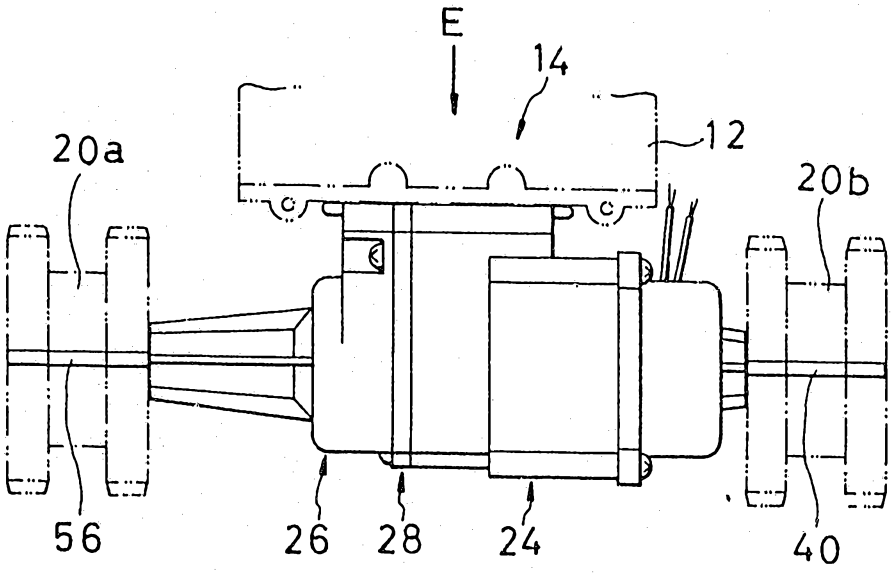

FIG. 5

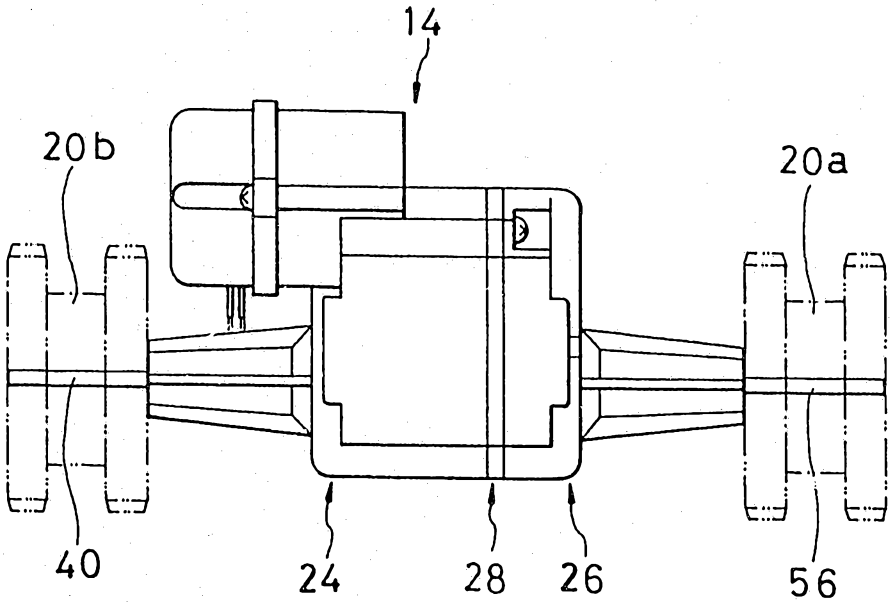

FIG. 6

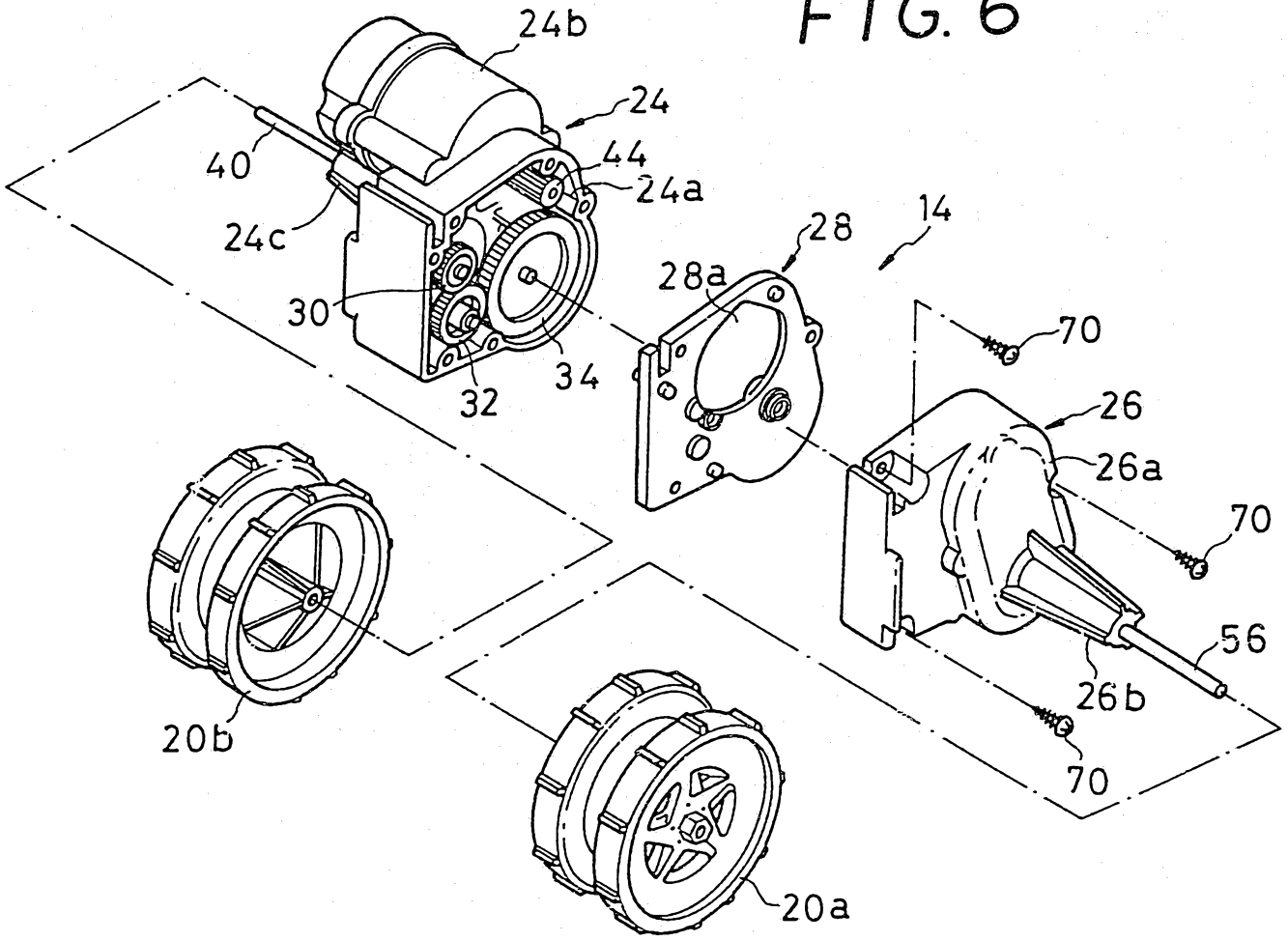
24b
24
40
44
24a
24c
28
14
28a
30
70
34
32
26
26a
70
56
26b
20b
70
20a

FIG. 7

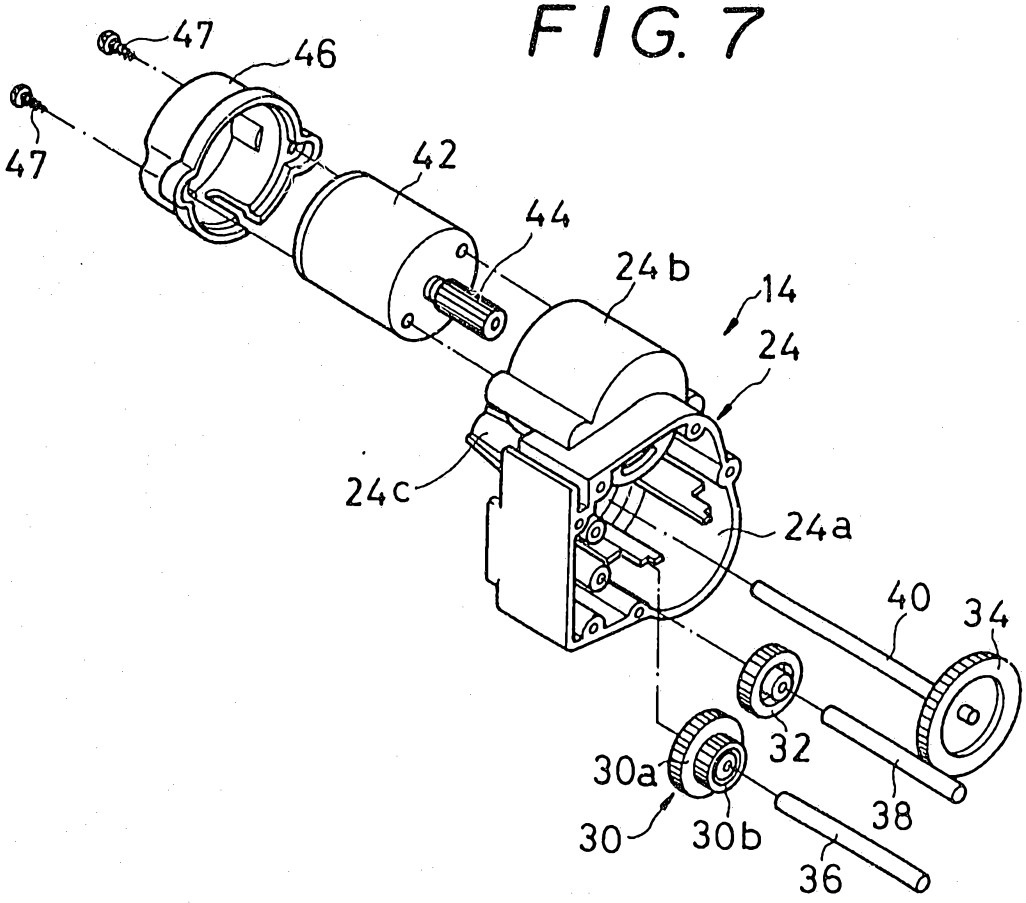
47
46
47
42
44
24b
14
24
24c
24a
40
34
32
30a
30
30b
38
36

FIG. 8

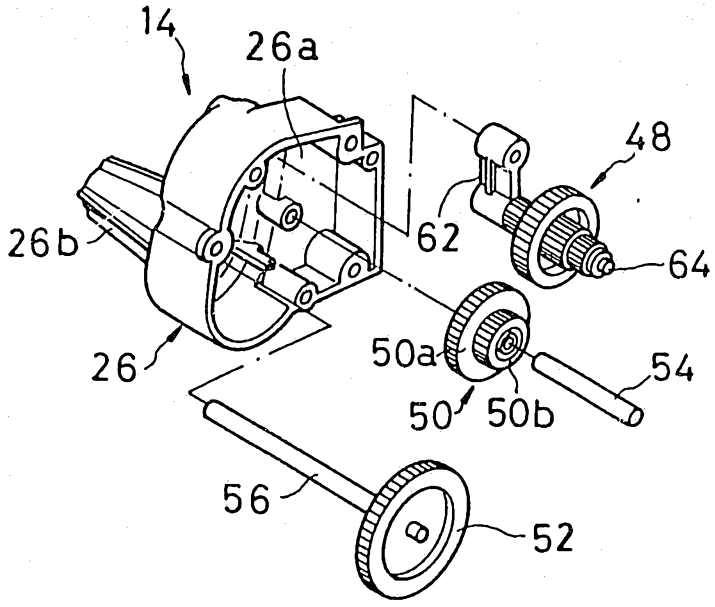
14
26a
48
26b
62
64
50a
54
26
50
50b
56
52

FIG. 9

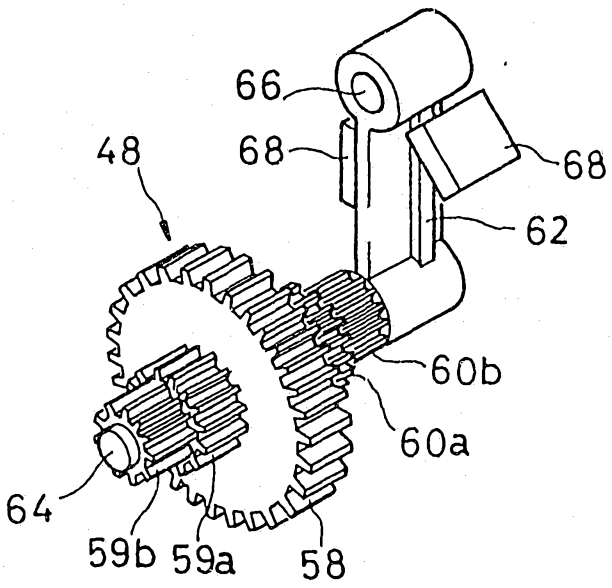
66
68
48
68
62
60b
60a
64
59b
59a
58

FIG. 10

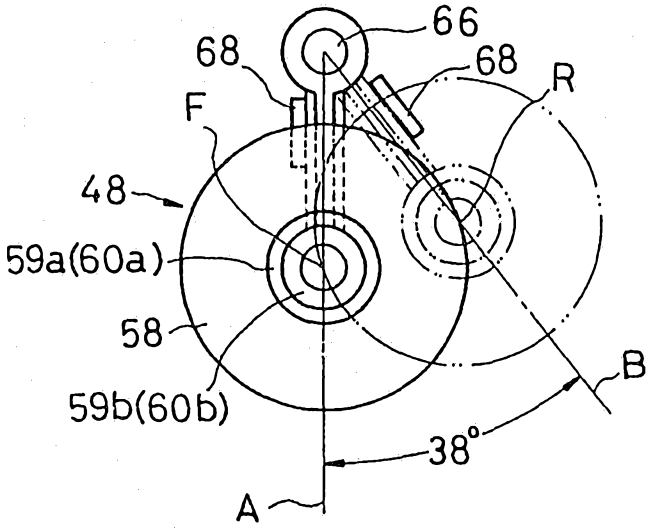
66
68
68
R
F
48
59a(60a)
58
59b(60b)
B
38°
A

FIG. 11

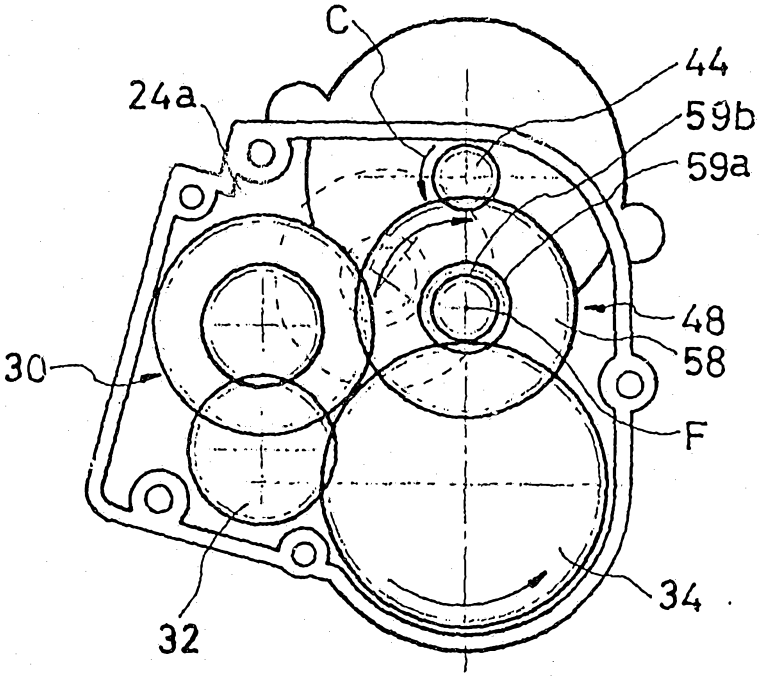
C
44
24a
59b
59a
48
58
30
F
34
32

FIG. 12

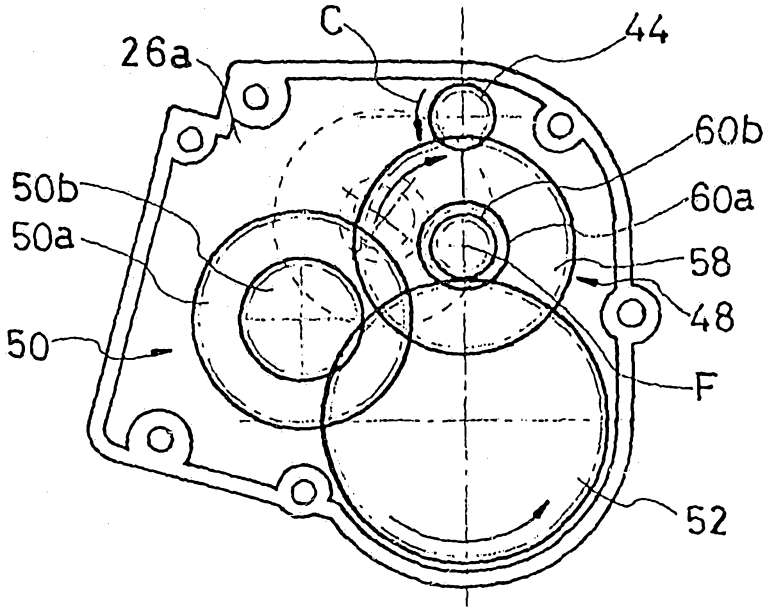
C
44
26a
60b
50b
60a
50a
58
48
50
F
52

FIG. 13

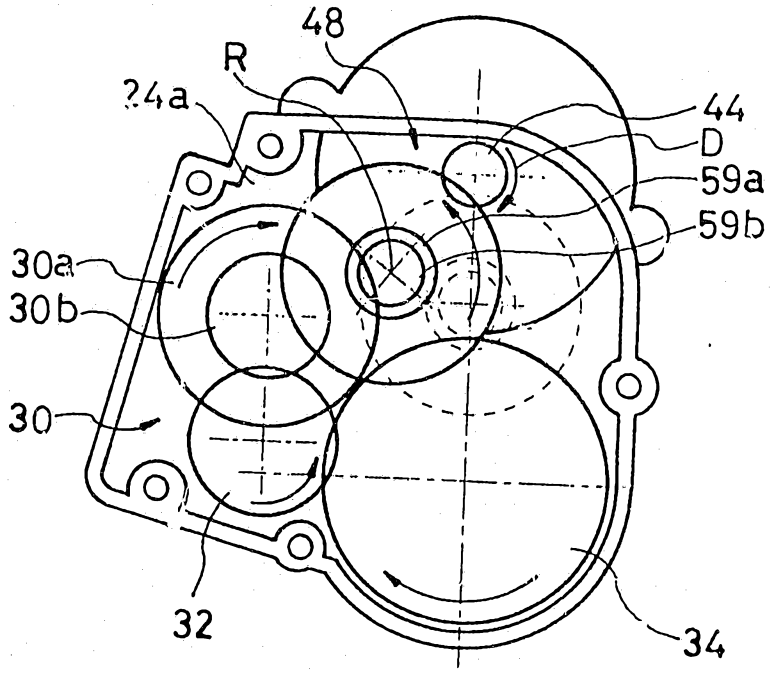
48
R
24a
44
D
59a
59b
30a
30b
30
32
34

FIG. 14

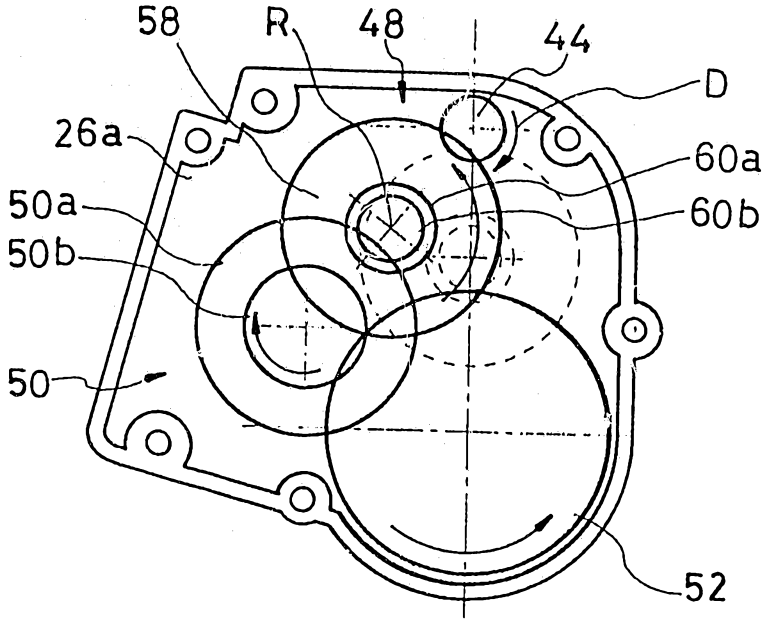
58
R
48
44
D
26a
60a
50a
60b
50b
50
52

FIG. 15

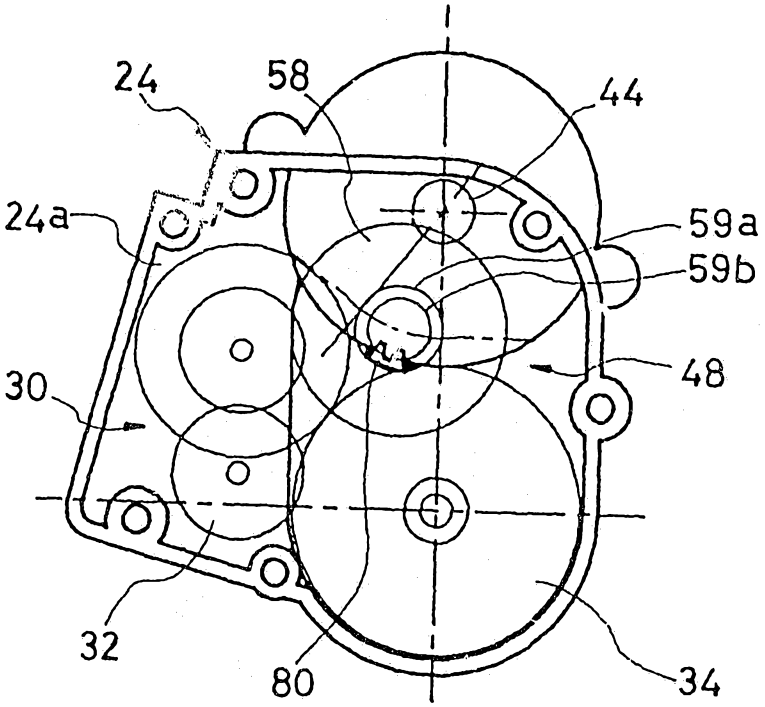

FIG. 16

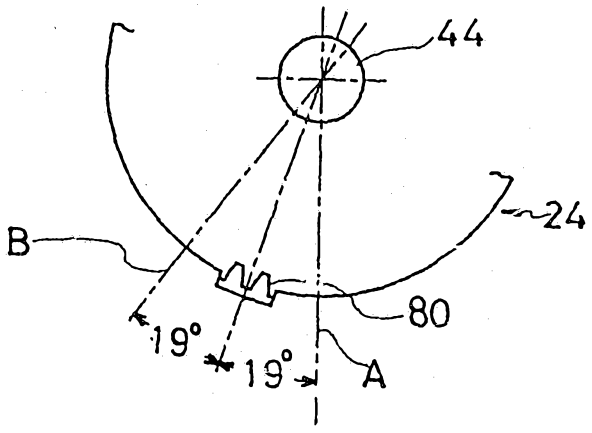

FIG. 17

