(19) DANMARK

(10) DK 2007 01807 L

(12) PATENTANSØGNING

Patent- og
Varemærkestyrelsen

(51) Int.Cl.[8]: *B 65 G 54/02 (2006.01)* *B 65 G 47/02 (2006.01)*

(21) Patentansøgning nr: **PA 2007 01807**

(22) Indleveringsdag: **2007-12-18**

(24) Løbedag: **2007-12-18**

(41) Alm. tilgængelig: **2007-12-18**

(71) Ansøger: **FKI Logistex A/S, P. O. Pedersens Vej 10, 8200 Århus N, Danmark**

(72) Opfinder: **Uffe Lykkegaard, Carl Blochsgade 31, 1.tv., 8000 Århus C, Danmark**

(74) Fuldmægtig: **Plougmann & Vingtoft A/S, Sundkrogsgade 9, 2100 København Ø, Danmark**

(54) Benævnelse: **SORTING SYSTEM WITH LINEAR SYNCHRONOUS MOTOR DRIVE**

(57) Sammendrag:

The present invention relates to a sorting system including a conveyor comprising a plurality of carts for carrying articles, in particular for sorting articles such as parcels and baggage. The conveyor has a linear synchronous motor drive system with stators arranged along a track which the carts follow. Reaction elements are mounted on each of the carts. The reaction elements each comprise an even or an uneven number of permanent magnets arranged on a plate-like carrier. The magnets on reaction elements of adjacent carts are arranged to form a row of magnets with alternating polarity, said row having two neighbouring magnets. At least one of the two neighbouring magnets has a reduced dimension in the transport direction, and the two neighbouring magnets are situated at a transition between adjacent carts.

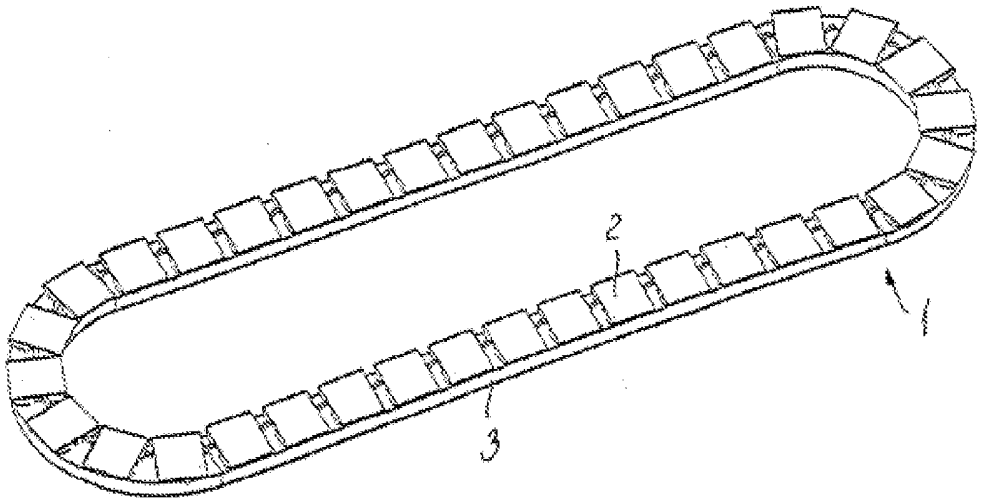

Fig. 1

CLAIMS

1. A sorting system including a conveyor comprising a plurality of carts for carrying articles, a track along which the carts may be driven, a propulsion system for providing a driving force to the carts for moving the carts along the track, said propulsion system comprising at least one stationary stator having a plurality of coils arranged to generate magnetic fields when electrical power is applied, and reaction elements mounted on each of the carts, said reaction elements each comprising a plurality of permanent magnets connected to at least one plate-like carrier, and said reactions elements being arranged on the carts in order to interact with the magnetic fields generated by the coils of the stator, as well as a controller for controlling a supply of electrical power to the stator in order to provide a driving force via the reaction elements to the carts when power is applied, where the reaction elements each comprises a number of permanent magnets arranged with alternating polarity, and where the magnets on reaction elements of two adjacent carts are arranged to form a longitudinal row of magnets as seen in a transport direction of the carts,, said row having two neighbouring magnets , at least one of said two magnets having, in the transport direction, a reduced dimension compared to other magnets of the reaction element, said two neighbouring magnets being located at each side of a transition between said two adjacent carts.

2. A sorting system according to claim 1, where both said at least two neighbouring magnets, in the transport direction, have a reduced dimension compared to other magnets of the reaction element.

3. A sorting system according to claim 1 or claim 2, where the reduced dimension is present only in the transport direction, not in a direction transverse to the transport direction.

4. A sorting system according to claim 1 or claim 2, where the reduced dimension is present both in the transport direction and in a direction transverse to the transport direction.

5. A sorting system according to any of claims 1-4, where the at least one of the two neighbouring magnets, in the transport direction, has a smaller rectangular shape compared to the other magnets having a relatively larger rectangular shape.

6. A sorting system according to any of claims 1-4, where the at least one of the two neighbouring magnets, in the transport direction, has an at least partly oval shape along at least a part of the magnet, said at least partly oval shape facing the other of the two neighbouring magnets.

7. A sorting system according to any of claims 1-4, where the at least one magnet of the two neighbouring magnets, in the transport direction, has a semi-circular disc shape along at least a part of the magnet, said semi-circular disc shape facing the other of the two neighbouring magnets.

8. A sorting system according to any of claims 1-4, where the at least one of the two neighbouring magnets, in the transport direction, has an at least partly tapering shape along at least a part of the magnet, said at least partly tapering shape facing the other of the two neighbouring magnets.

9. A sorting system according to any of claims 1-4, where the at least one of the two neighbouring magnets, in the transport direction, has a wedge-like shape along at least a part of the magnet, said wedge-like shape facing the other of the two neighbouring magnets.

10. A sorting system according to any of claims 1-4, where the at least one of the two neighbouring magnets, in the transport direction, has a point-like shape along at least a part of the magnet, said point-like shape facing the other of the two neighbouring magnets.

11. System according to any of claims 1-10, where the number of permanent magnets arranged with alternating polarity is an even number, and where the two neighbouring magnets having a reduced dimension have a different polarity.

12. System according to any of claim 1-10, where the number of permanent magnets arranged with alternating polarity is an uneven number, and where the two neighbouring magnets having a reduced dimension have a different polarity.

13. System according to any of claims 1-12, where each plate-like carrier is arranged in a horizontal position on the carts and the at least one stationary stator is arranged to interact with the reaction elements from a position below said reaction elements when the stator and reaction elements are interacting.

14. System according to any of claims 1-12, where each plate-like carrier is arranged in a vertical position on the carts and at least one stationary stator is arranged to interact with the reaction elements from a position situated sideways to said reaction elements when the stator and the reaction elements are interacting.

15. System according to any of claims 1-12, where each plate-like carrier is arranged in a vertical position on the carts and at least two stationary stators are arranged to interact with the reaction elements from opposite positions situated sideways to said reaction elements when the stators and the reaction elements are interacting.

16. System according to any preceding claim, where the plate-like carrier comprises ferromagnetic material which is arranged to lead a magnetic field from at least one permanent magnet to another permanent magnet.

17. System according to any preceding claim, where the surface of the permanent magnets has an extent within one of the following intervals: from zero to and including 25 mm in the longitudinal direction of the cart, from 25 mm to and including 50 mm in a longitudinal direction of the cart, or from 50 mm to and including 75 mm in a longitudinal direction of the cart, or from 75 mm to and including 100 mm in a longitudinal direction of the cart.

18. System according to any preceding claim, where a cart to cart pitch of consecutive carts is a natural number of hundreds of millimetres.

19. System according to any preceding claim, where the pitch of consecutive carts is selected from a group comprising 100, 200, 300, 400, 500, 600, 700, 800, 900, 1000, 1100, 1200, 1300, 1400, 1500, 1600, 1700, 1800, 1900 and 2000 millimetres.

20. System according to any preceding claim, where the carts form an endless chain of carts.

21. System according to any preceding claim, where a plurality of stators are arranged along the track.

22. System according to any preceding claim, where the controller further comprises an encoder for determining a position and a speed of one or more carts, and the controller is operable to control the electrical power applied to the coil assembly in response to the determined position and speed.

23. A cart for a sorting system according to any of claims 1-22, the cart comprising a frame structure, at least one magnetic reaction element comprising a plural number of permanent magnets mounted on a at least one plate-like carrier, where the cart comprises linking means for connection to another cart, and where the reaction element, when the cart is connected to an identical cart to form two adjacent carts, the magnets on the reaction elements of said two adjacent carts are forming a row of magnets having alternating polarity, said row having at least one magnet having a reduced dimension compared to other magnets of the reaction element.

24. A sorting system according to claim 23, where both said at least two neighbouring magnets, in the transport direction, have a reduced dimension compared to other magnets of the reaction element.

25. A sorting system according to claim 23 or claim 24, where the reduced dimension is present only in the transport direction, not in a direction transverse to the transport direction.

26. A sorting system according to claim 23 or claim 24, where the reduced dimension is present both in the transport direction and in a direction transverse to the transport direction.

27. A sorting system according to any of claims 23-26, where the at least one of the two neighbouring magnets, in the transport direction, has a smaller rectangular shape compared to the other magnets having a relatively larger rectangular shape.

28. A sorting system according to any of claims 23-26, where the at least one of the two neighbouring magnets, in the transport direction, has an at least partly oval shape along at least a part of the magnet, said at least partly oval shape facing the other of the two neighbouring magnets.

29. A sorting system according to any of claims 23-26, where the at least one magnet of the two neighbouring magnets, in the transport direction, has a semi-circular disc shape along at least a part of the magnet, said semi-circular disc shape facing the other of the two neighbouring magnets.

30. A sorting system according to any of claims 23-26, where the at least one of the two neighbouring magnets, in the transport direction, has an at least partly tapering shape along at least a part of the magnet, said at least partly tapering shape facing the other of the two neighbouring magnets.

31. A sorting system according to any of claims 23-26, where the at least one of the two neighbouring magnets, in the transport direction, has a wedge-like shape along at least a part of the magnet, said wedge-like shape facing the other of the two neighbouring magnets.

32. A sorting system according to any of claims 23-26, where the at least one of the two neighbouring magnets, in the transport direction, has a point-like shape along at least a part of the magnet, said point-like shape facing the other of the two neighbouring magnets.

33. A cart according to any of claims 23-32, where the number of permanent magnets arranged with alternating polarity is an even number, and where the two neighbouring magnets having a reduced dimension have a different polarity.

34. A cart according to any of claims 23-32, where the number of permanent magnets arranged with alternating polarity is an uneven number, and where the two neighbouring magnets having a reduced dimension have a different polarity.

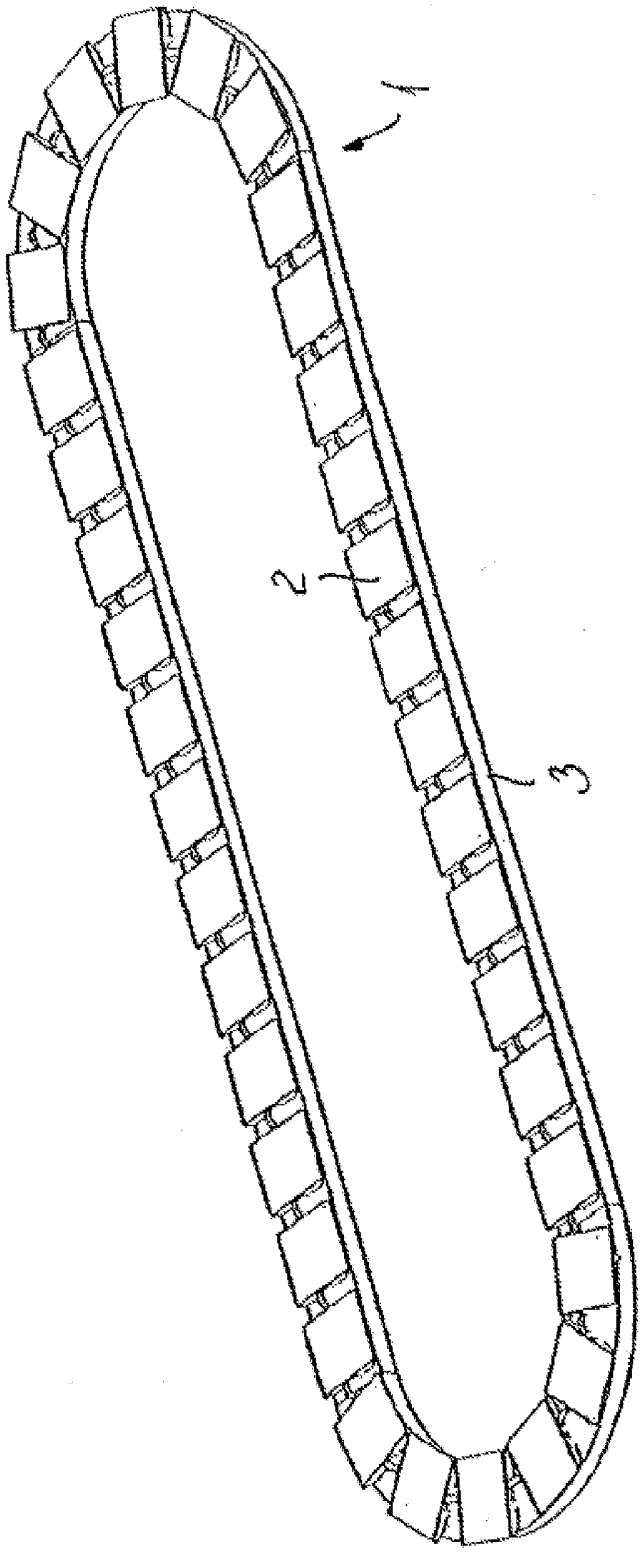

Fig. 1

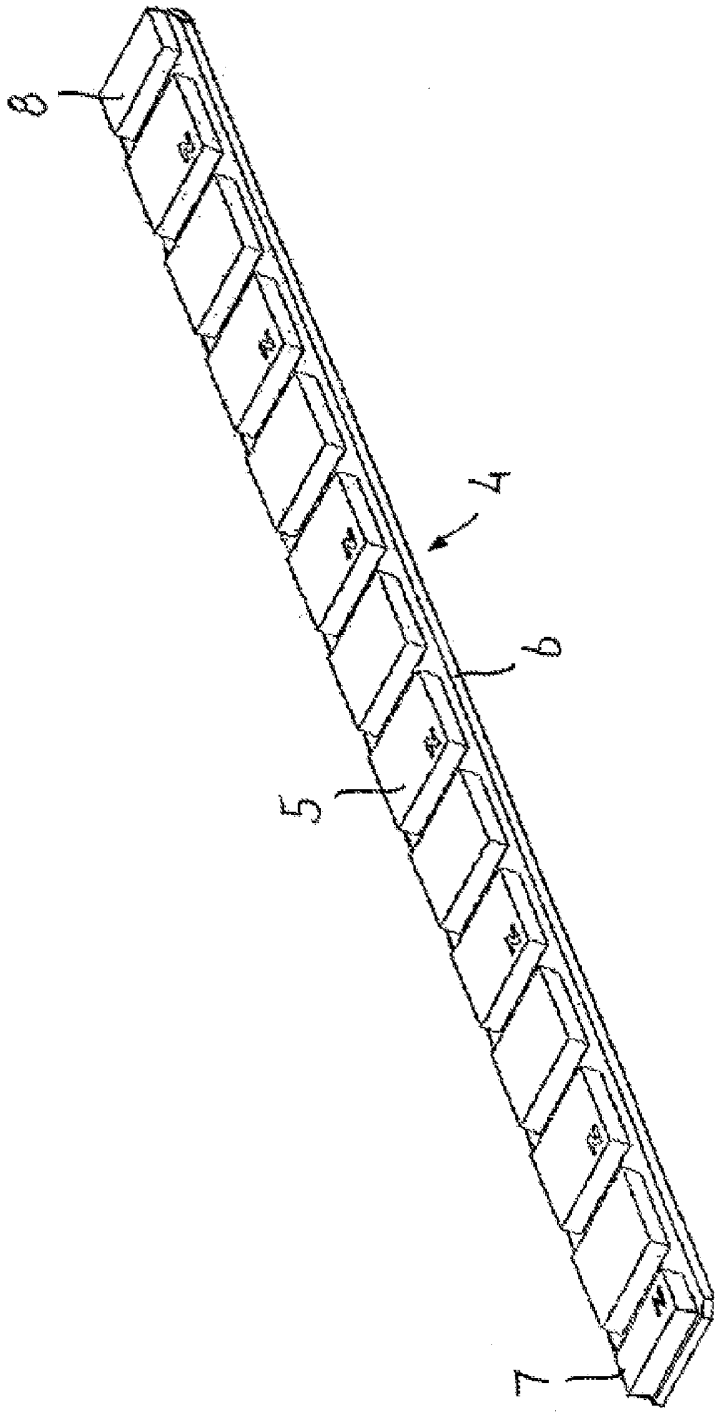

Fig. 2

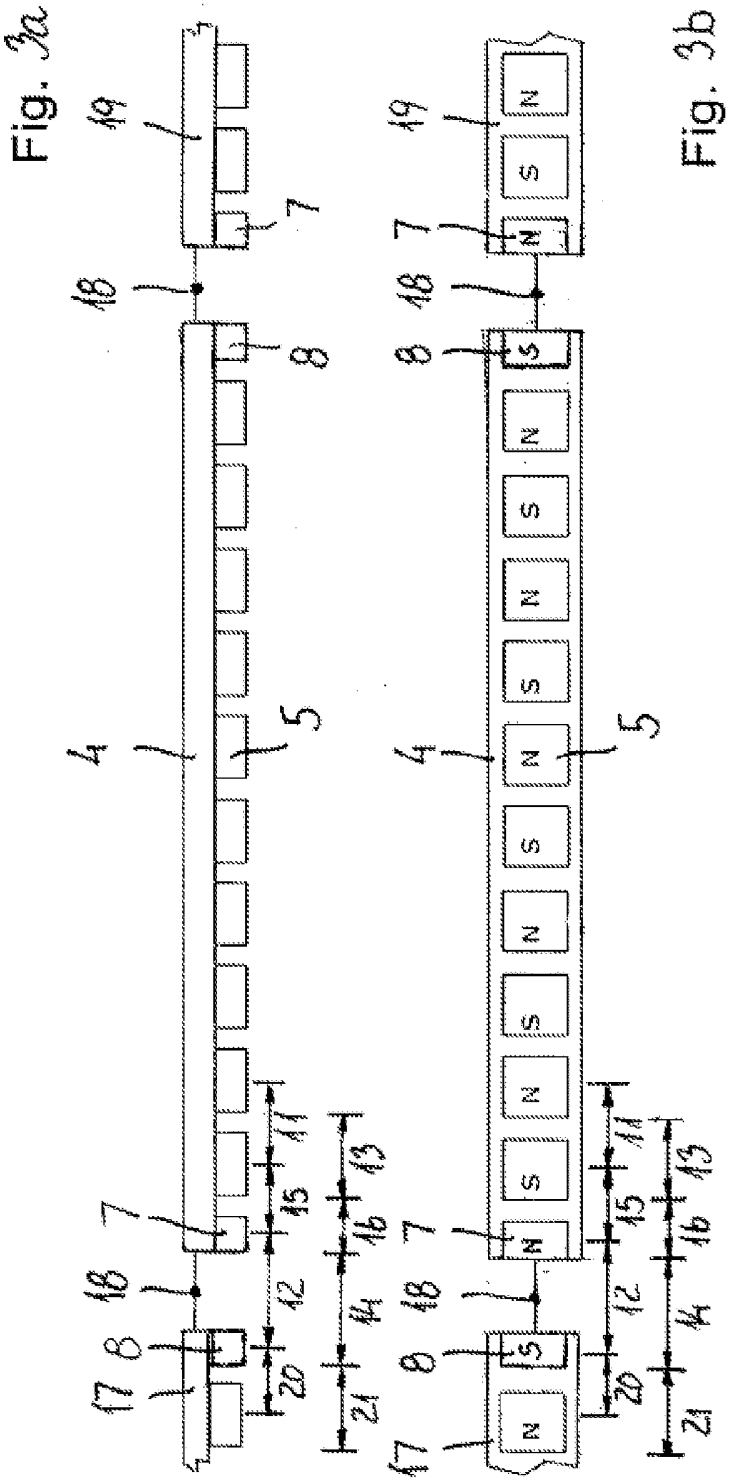
Fig. 3a
Fig. 3b
4
5
7
8
11
12
13
14
15
16
17
18
19
20
21
N
S

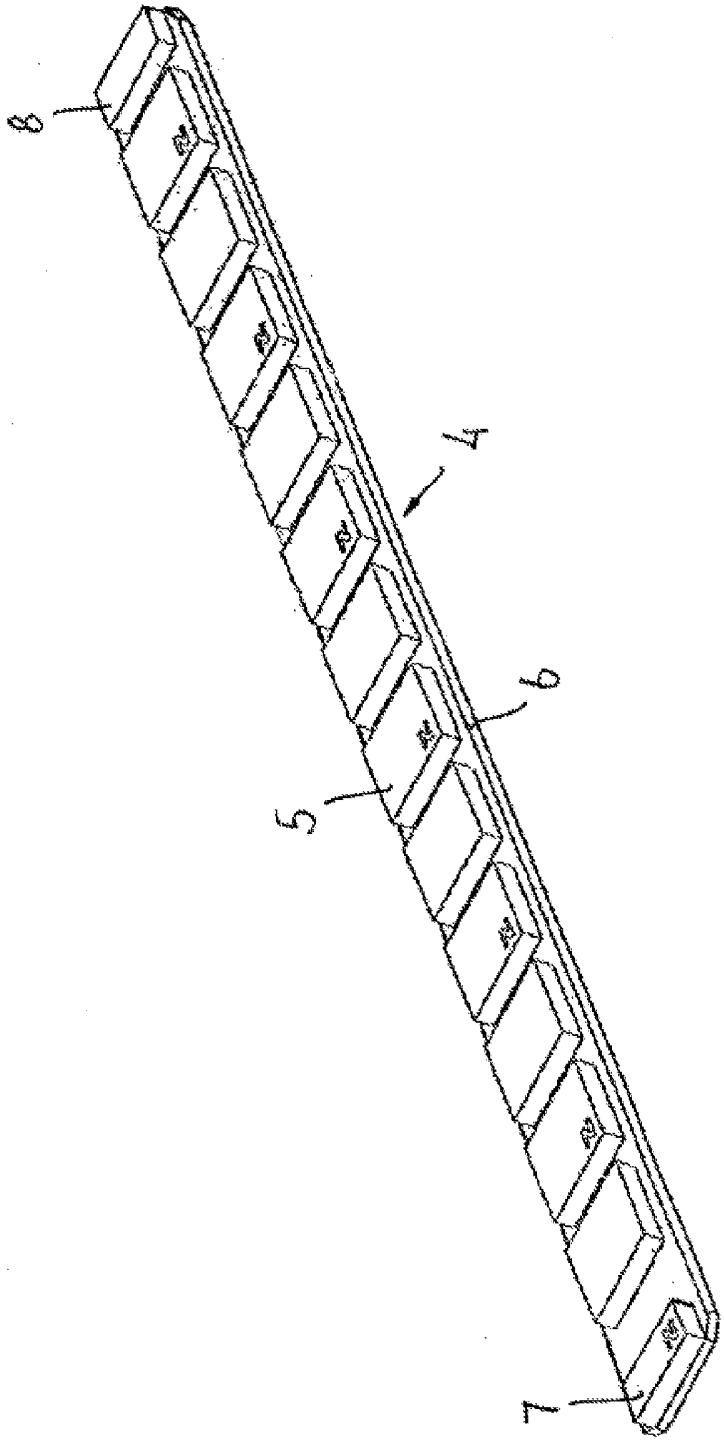

Fig. 4

Fig. 5a

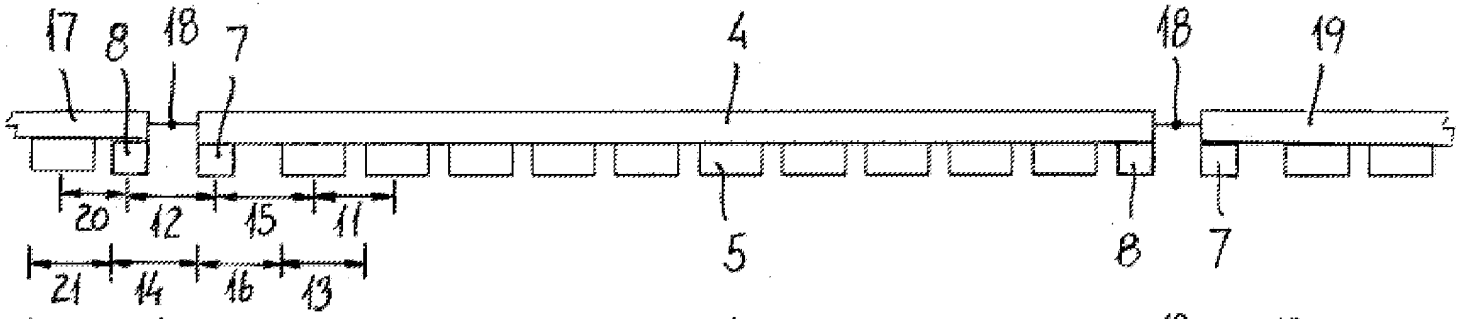
17
8
18
7
4
18
19
20
12
15
11
21
14
16
13
5
8
7

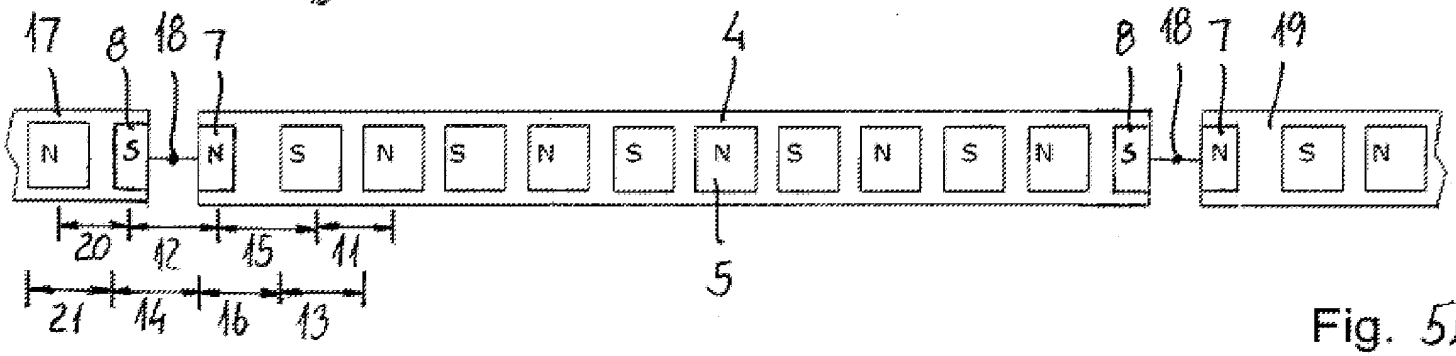
17
8
18
7
4
8
18
7
19
N
S
N
S
N
S
N
S
N
S
N
S
N
S
N
S
N
20
12
15
11
21
14
16
13
5

Fig. 5b

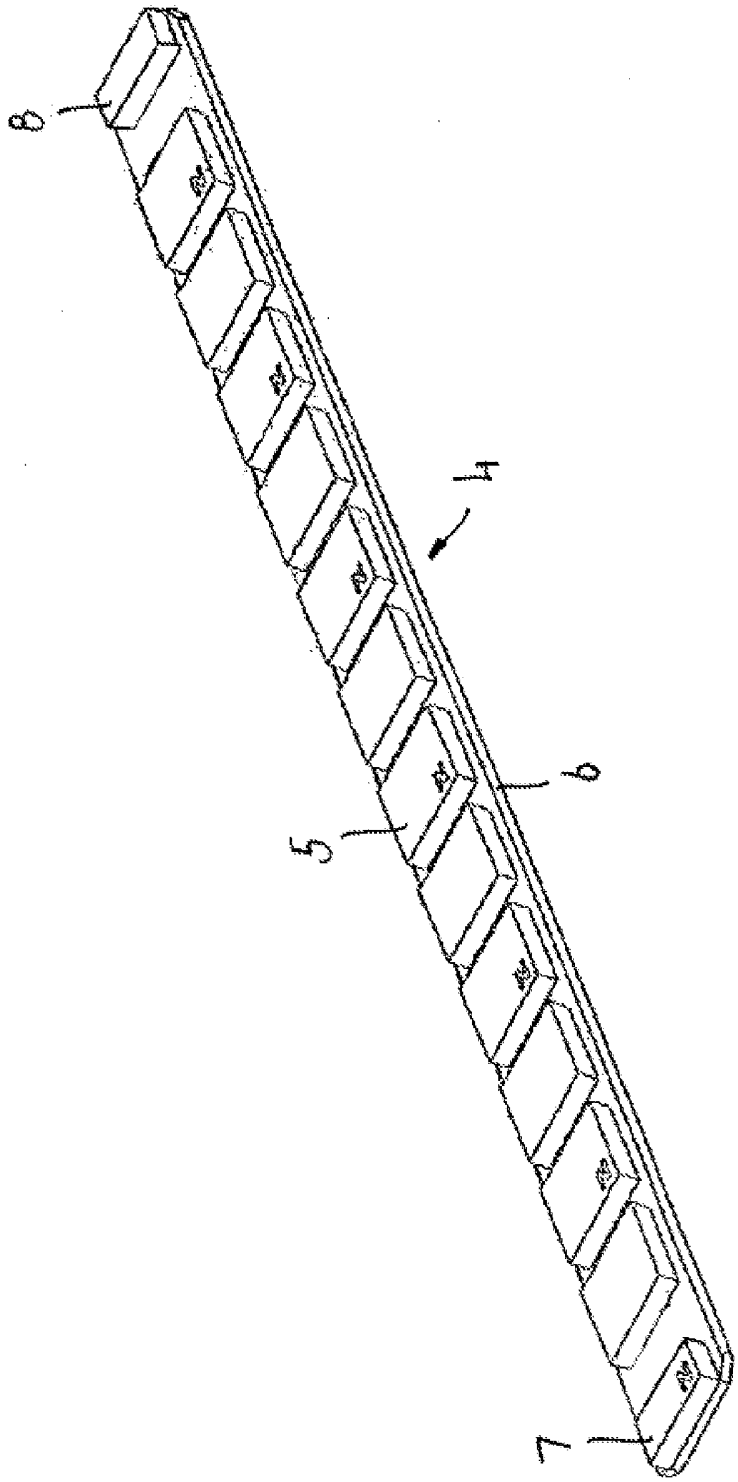

Fig. 6

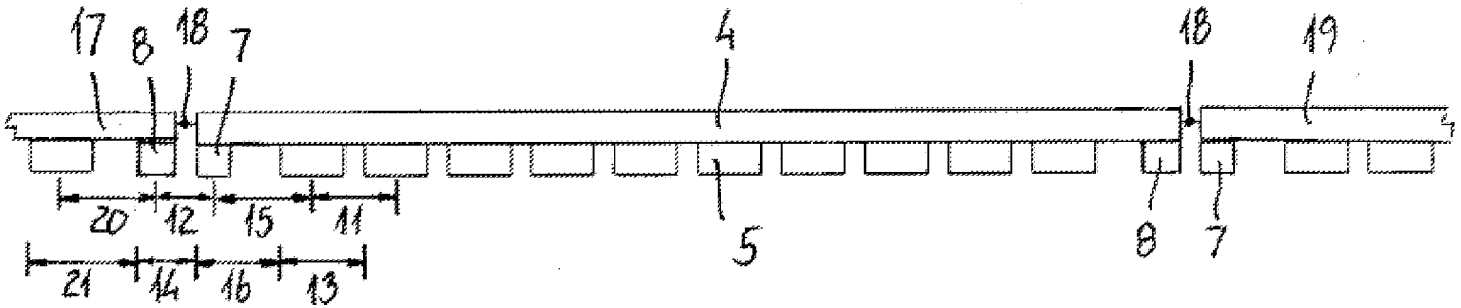
17
8
18
7
4
18
19
20
12
15
11
21
14
16
13
5
8
7

Fig. 7a

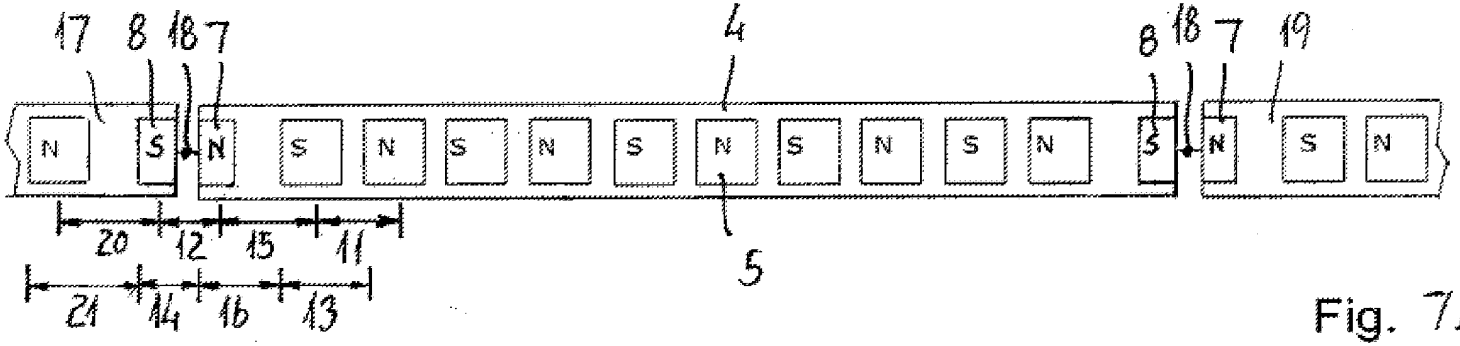
17
8
18
7
4
8
18
7
19
N
S
N
S
N
S
N
S
N
S
N
S
N
S
N
S
N
20
12
15
11
21
14
16
13
5

Fig. 7b

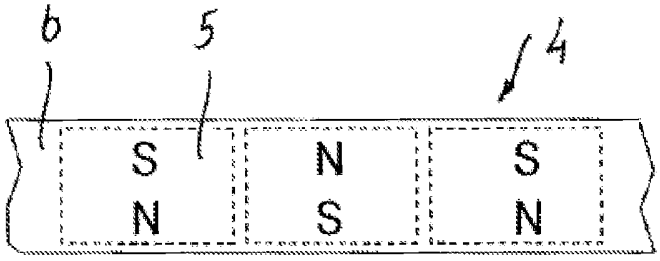

Fig. 8

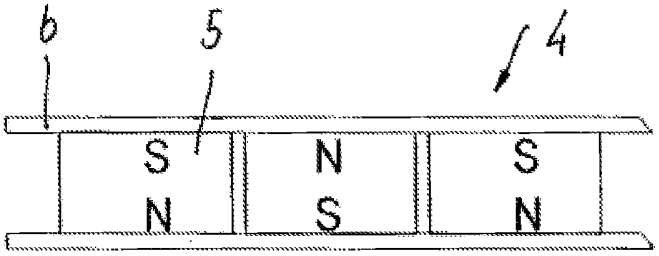

Fig. 9

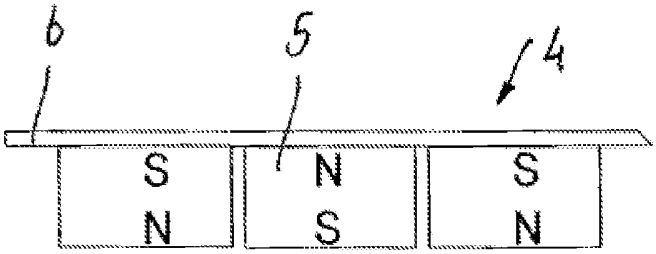

Fig. 10

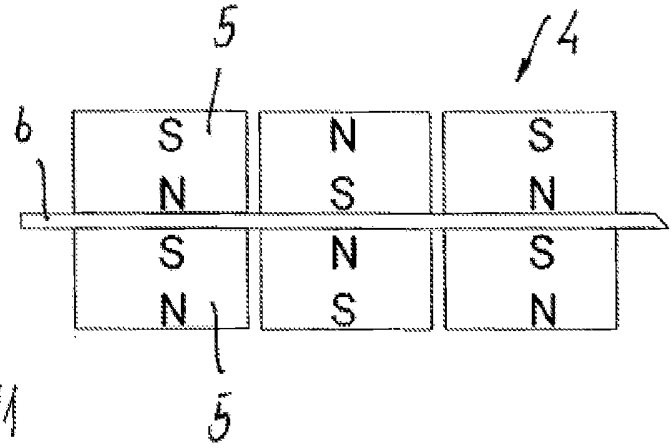

Fig. 11

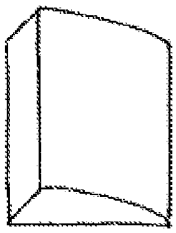

Fig 12a

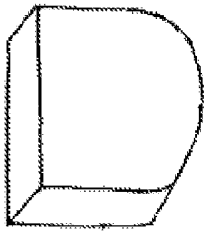

Fig. 12b

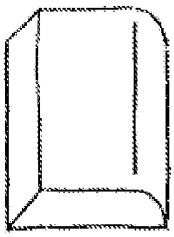

Fig. 13a

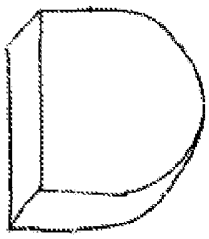

Fig. 13b

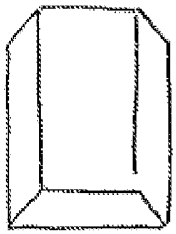

Fig. 14a

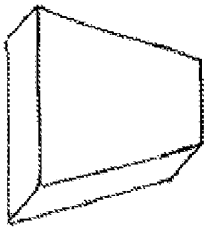

Fig. 14b

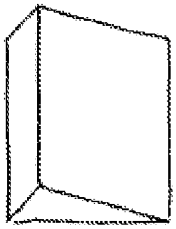

Fig. 15a

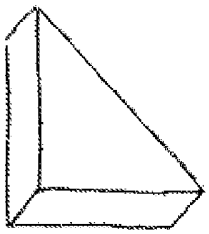

Fig. 15b

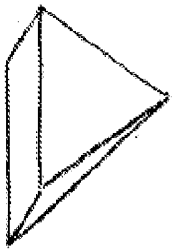

Fig. 16a

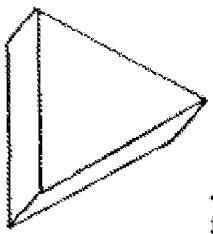

Fig. 16b