May 31, 1938. L. G. KETCHAM 2,119,107

CONDENSER

Filed Sept. 12, 1934

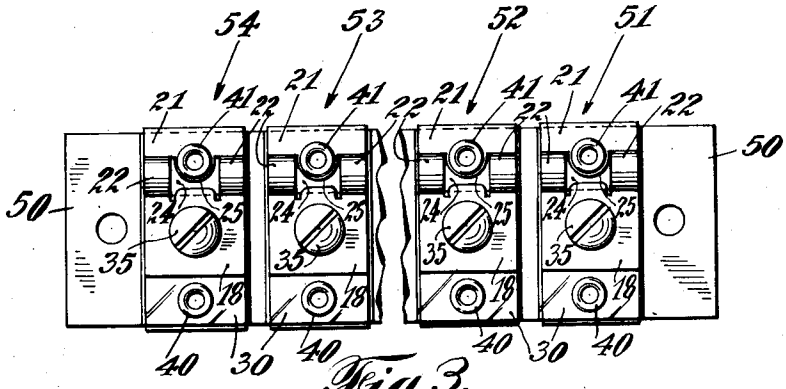

Fig. 3.

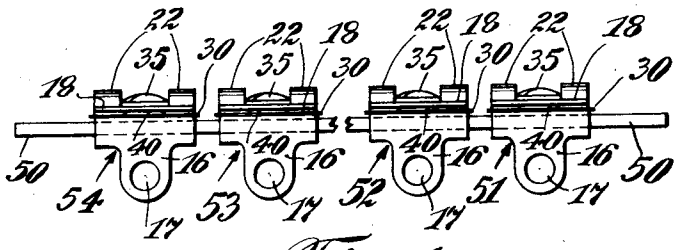

Fig. 4.

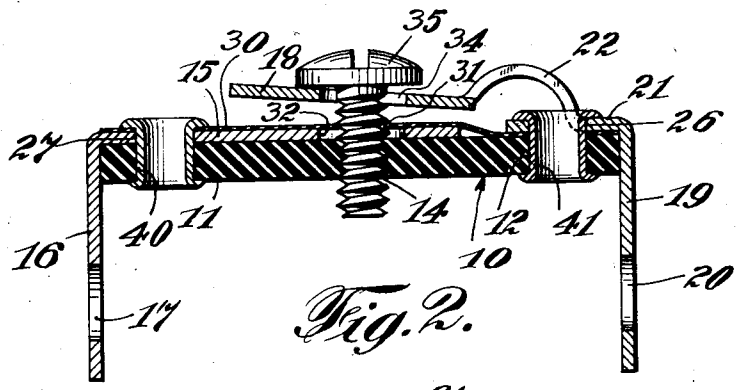

Fig. 2.

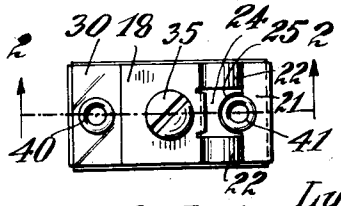

Fig. 1.

INVENTOR
Lyman G. Ketcham
BY
Ramsey & Keal
ATTORNEYS

Patented May 31, 1938

2,119,107

UNITED STATES PATENT OFFICE

2,119,107

CONDENSER

Lyman G. Ketcham, Brooklyn, N. Y., assignor to Teleradio Engineering Corporation, New York, N. Y., a corporation of New York

Application September 12, 1934, Serial No. 743,710

4 Claims. (Cl. 175—41.5)

This invention relates to condensers for use in radio apparatus and particularly to condensers of the type known to the art as trimmer condensers utilized for making fine adjustments in the capacity of a circuit.

An object of the invention is to provide a new, simple, efficient and inexpensive condenser of very small variable capacity.

Another object of the invention is to provide a condenser of such construction that the capacity thereof can be varied by simply rotating a single control member.

A further object of the invention is to provide a condenser in which the movable plate is so constructed as to be forced away from the fixed plate normally under its own resiliency.

A condenser in accordance with one form of the invention is made up of a rectangular base of some good insulating material to a portion of the surface of which is secured a rectangular metallic plate having a depending terminal portion. A strip of dielectric insulating material is secured to the top of the first plate and to the surface of the base over which the first base does not extend. A second plate has a portion thereof fastened directly over the dielectric resting on the surface of the base and has another portion thereof extending normally at an angle upwardly from the base. This second plate also has a depending terminal formation. The base is provided with a central aperture screw threaded for the reception of a screw which passes through openings in the two plates and the innermost dielectric. By simply turning this screw the movable plate can be pressed downwardly against the dielectric, increasing the capacity of the condenser. When the screw is rotated in reverse direction, the resiliency in the connections between the fixed part of the movable plate and the movable part thereof serves to move the second plate away from the dielectric and the first plate to decrease the capacity of the condenser to the minimum possible value.

Other features, objects, and advantages of the invention will become apparent by reference to the following detail description read in the light of the accompanying drawing, wherein

Fig. 1 is a plan view of a single condenser embodying the invention;

Fig. 2 is an enlarged section taken substantially on the line 2—2 of Fig. 3;

Fig. 3 is a plan view of a plurality of condensers embodying the invention mounted on a single strip of insulating material; and

Fig. 4 is a side elevation of the arrangement shown in Fig. 3.

Referring now to the drawing and particularly to Figs. 1 and 2, 10 indicates a base member made up of a rectangular block of an insulating material of any suitable composition, such as a phenol condensation product. This base 10 is provided at each end with openings 11 and 12 and with a central opening 14, the wall of which is screw threaded.

One of the metallic plates of the condenser consists of a rectangular flat portion 15 and an angular depending portion 16, which portion 16 serves as a terminal for the connection of conductors. If desired the terminal portion 16 may be provided with an opening 17 to facilitate the attachment of a conductor. The other plate of the condenser consists of a flat rectangular portion 18 and an angular terminal portion 19 having an opening 20 therein. This second plate has a short portion 21 at right angles to the terminal part 19, which portion 21 is joined to the flat portion 18 by means of bowed connecting strips 22 separated from each other by a space 24. This space 24 of course is made by removing a part of the material of the strip from which the entire plate is formed. The portion 21 has a rounded extension 25 extending into the space 24 and an opening 26 is provided in the portion 21 and the extension 25. The flat part 15 of the first condenser is also provided with an opening 27. The engagement of the ends of the base with the terminal portions of the plates serves to prevent movement of the plates about the eyelets, should the eyelets not fit snugly in the plate openings.

The dielectric used in this condenser consists of a strip 30 of some suitable insulating material such as mica. The strip 30 has a small opening 31 therein concentric with the opening 14 when the strip is secured to the base 10. The plate 15 is also provided with an opening 32 concentric with the openings 14 and 31 but of considerably larger diameter. A similar opening 34 is provided in the plate 18. A headed screw 35 makes threaded engagement with the threads of the opening 14.

The parts of the condenser are assembled as follows: The first plate is positioned on the top of the base 10 with portion 15 resting on the surface of the base. The strip of insulating material 30 is then placed on top of the portion 15. These two parts are locked to the base by means of an eyelet 40 which passes through the strip 30, through the opening 37 in the plate 15,

and through the opening 11 in the base 10, the eyelet being headed over as shown. As will be seen from the drawing and particularly Fig. 4, the strip of dielectric 30 is longer than the plate 15, the excess of the strip 30 being bent down to lie flat against the base 10. The other condenser plate is then positioned on top of this strip of dielectric and locked in place by means of an eyelet 41 which passes through the opening 26 through the dielectric and through the opening 12, this eyelet being headed over as shown. The headed screw 35 may then be inserted into the opening 14 and screwed downwardly. While the strip of dielectric material has been shown as being of such length as to extend beyond the end of the plate 15, such construction is not necessary to efficient operation of the device. The strip of dielectric material may terminate short of the end of the base, the only requirement being that it completely cover the plate 15. In the arrangement shown, of course, the extra length of this strip permits the strip to be locked in place by the eyelet holding the top plate to the base as well as by the eyelet holding the bottom plate to the base.

When the second plate having the bowed separators is initially produced, the portion 18 thereof is given an upward slant relative to the part 21 fastened directly to the base. Since the plates are made of some suitable metal, the separators 22 will possess some resiliency so that even if the screw 35 be tightened downwardly to the full limit and then released, the portion 18 is moved away from the base due to this resiliency of the spacers. For this reason the only operation required to change the capacity of the condenser is the simple operation of tightening or loosening the screw 25, which serves to move the plate 18 closer to the plate 15 or to permit the plate 18 to move away from the plate 15.

In some types of radio apparatus it is necessary to conserve space as much as possible, and, it may be desirable to utilize a plurality of condensers in a minimum of space. Accordingly, the invention contemplates the provision of so-called condenser "gangs" so constructed that a single base may have mounted thereon a plurality of sets of plates, each set of plates being separated by dielectric in the fashion before explained. For this reason the invention can be utilized to produce a condenser gang of the fashion shown in Figs. 3 and 4 wherein a single base 50 has condenser assemblies 51, 52, 53, and 54 mounted thereon, each assembly being similar to the arrangement shown in Figs. 1 and 2. It will be understood of course that the number of assemblies on a single base can be varied as occasion demands, in practice this number having been within the range of from two to eight or more assemblies on a single base.

It has been found in practice that a condenser made in accordance with the foregoing description has a capacity which can be varied within the range of from two to forty micro microfarads. When the upper plate is pressed downwardly tightly against the dielectric, the capacity of the condenser is at its greatest value, which capacity decreases as the control screw is turned to permit separation of the two plates of the condenser. The resiliency of the bowed separators insures that the upper plate will move away from the lower plate to secure the minimum capacity.

A condenser of this type, which is known to the art generally as a trimmer condenser, is of special utility for making fine adjustments in the capacity of a circuit having a variable tuning condenser therein. When a condenser of the character of the invention is included in circuit with a variable tuning condenser, the capacity of the circuit can be varied within the range of from two to forty micro micro-farads, thereby permitting the finest possible adjustments to be made. Condensers of this invention are particularly useful in radio apparatus when included between the plate circuit and the grid circuit of the radio frequency transformer or between tuned circuits for band pass use.

From the foregoing it will be seen that the present invention provides new, simple and efficient condensers of very small capacity, which capacity can be varied within a relatively wide range to permit the making of fine adjustments in the capacity of circuits of radio apparatus. It will be understood of course that the invention is capable of modification, in view of which any limitations imposed thereupon are to be only such as are defined by the following claims.

I claim:

1. A condenser of the type described comprising a flat base of insulating material, a thin metallic plate on a surface of said base, a thin strip of dielectric material over said plate, a fastening member for securing said plate and said dielectric strip to said base near one end thereof, said plate having an angular downwardly extending portion resting against an end of said base and cooperating with said member for preventing movement of the plate relative to the base, a second plate having a portion secured to said base near the other end thereof and beyond an end of said first plate and having another portion resiliently forced upwardly from said base over said first plate, and means for drawing said upwardly extending portion of said second plate toward the base against the said resiliency of the second plate, said upwardly extending portion overlying only that part of the first plate inward of said fastening member.

2. A condenser of the type described comprising a flat base of insulating material, a thin metallic plate on a surface of said base, a thin strip of dielectric material over said plate, a fastening member for securing said plate and said dielectric strip to said base near one end thereof, said plate having an angular downwardly extending portion resting against an end of said base and cooperating with said member to prevent rotation of the plate relative to the base, a second plate having a flat portion, a fastening member for attaching said flat portion to said base near the other end thereof and beyond an end of the first plate, said second plate having a depending angular portion resting against an end of the base and cooperating with said second fastening member for preventing rotation of said second plate relative to the base, said second plate having a portion resiliently pressed upwardly away from said base and extending over the first plate, and means for drawing said resilient portion toward said base, said resilient portion overlying only that part of the first plate intermediate said fastening members.

3. A condenser of the type described comprising a flat base of insulating material, a thin metallic plate, a thin strip of dielectric material overlying said plate, a fastening member for securing said plate and said dielectric strip to said base near one end thereof, a second plate member

having a flat portion lying above a surface of said base and having another flat portion joined to the first flat portion by separated bowed strips, a fastening member for securing said second plate to said base, said second-mentioned fastening member passing through the first-mentioned flat portion between said bowed strips, said bowed strips being resilient and of such relatively large radii as to cause the second mentioned flat portion of said second plate to be separated from the first plate by a substantially wide gap throughout the length of said second mentioned flat portion, and means for drawing said second mentioned flat portion toward the base against the resiliency of said bowed strips, said second mentioned flat portion being of such length as to overlie only that part of the first plate intermediate said fastening members.

4. A condenser of the type described comprising a flat base of insulating material, a thin metallic plate on a surface of said base, a thin strip of dielectric material over said plate, a member for securing said plate and said dielectric strip to said base near one end thereof, said plate having an angular downwardly extending portion resting against an end of said base and cooperating with said member to prevent rotation of the plate relative to the base, a second plate having a flat portion, a member for attaching said flat portion to said base near the other end thereof and beyond an end of the first plate, said second plate having a depending angular flange resting against an end of the base and cooperating with said second member for preventing rotation of said second plate relative to the base, said second plate having a portion extending upwardly over the first plate, the said portions of said second plate being connected by separated resilient bowed strips of such relatively large radii as to cause the upwardly extending portion of the second plate to be separated from the first plate by a substantially wide gap throughout the length of the upwardly extending portion, and means for varying the width of the gap between the plates, said upwardly extending portion overlying only that part of the first plate intermediate said members.

LYMAN G. KETCHAM.