United States Patent [19]

Ota

[11] **3,716,041**

[45] **Feb. 13, 1973**

[54] **GRINDSTONE DRESSING TOOL PROTECTION DEVICE**

[76] Inventor: **Hiroshi Ota,** c/o Toyoda Koki Kabushiki Kaisha of 1,1-chome, Asahimachi, Kariya, Aichi Prefecture, Japan

[22] Filed: **March 31, 1971**

[21] Appl. No.: **129,876**

[30] **Foreign Application Priority Data**

April 7, 1970 Japan 45/29686

[52] **U.S. Cl.** ..... **125/11 R**

[51] **Int. Cl.** **B24b 53/00**

[58] **Field of Search** ..... 125/11 C, 11 CD, 11 R

[56] **References Cited**

UNITED STATES PATENTS

3,017,875	1/1962	Jones	125/11 CD
3,006,332	10/1961	Cooper	125/11 CD

Primary Examiner—Harold D. Whitehead

Attorney—Connolly & Hutz

[57] **ABSTRACT**

Grinding machine comprises rotatably mounted grindstone and rotatable grindstone dressing device having axis of rotation parallel to axis of grindstone. Protector shield is mounted between dressing tool and grindstone for protecting dressing tool at all times except during actual dressing operation of grindstone. Motivator moves protector shield into and out of alignment with dressing tool and grindstone so that dressing tool is protected by shield when shield is positioned between tool and grindstone.

3 Claims, 3 Drawing Figures

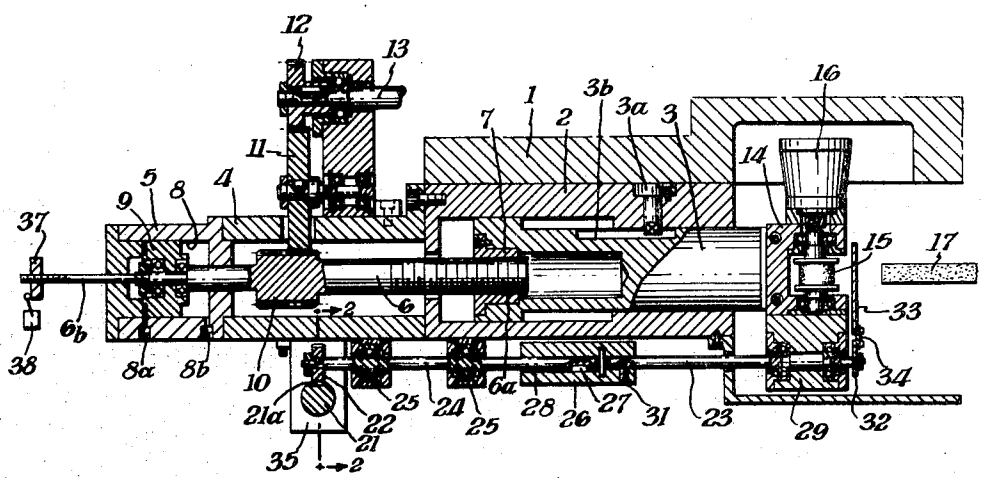

Fig. 1.

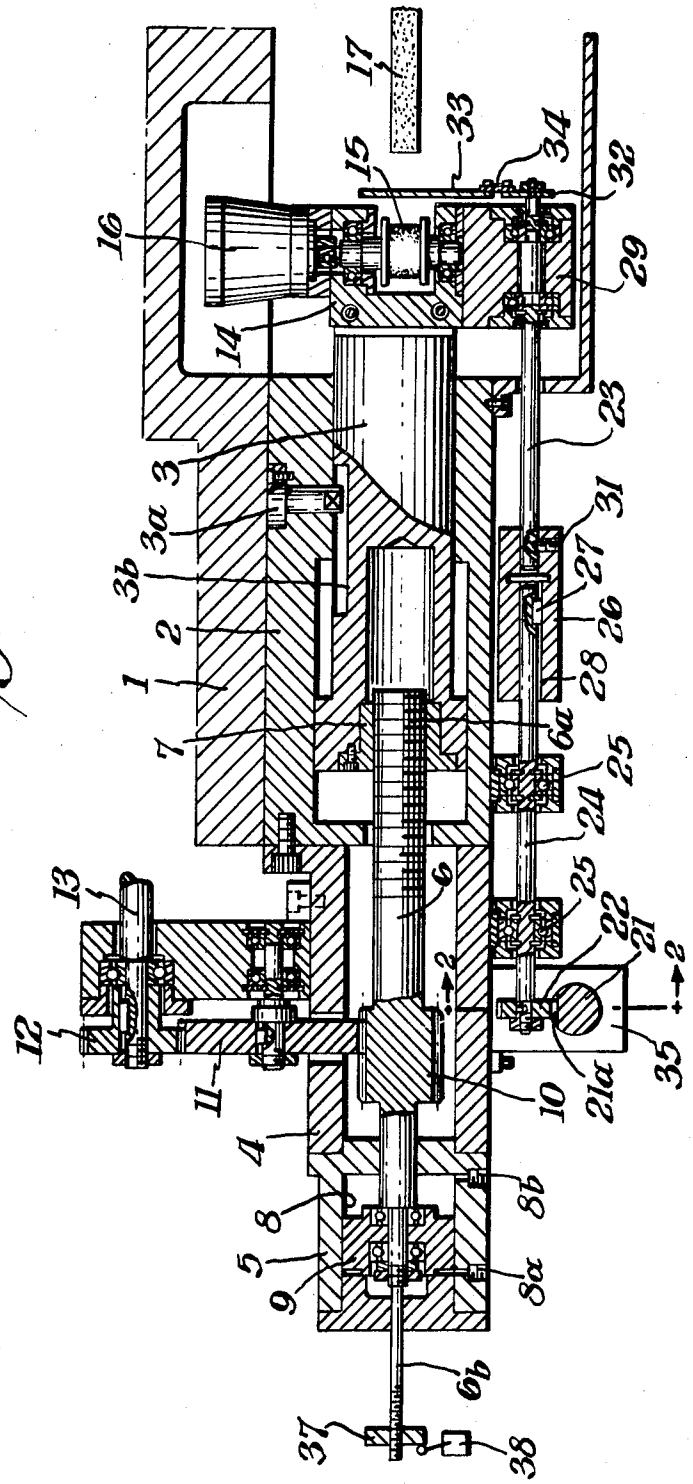
17
33
34
32
15
16
29
14
23
3
31
3a
27
3b
26
2
28
1
6a
7
25
24
13
6
25
22
21
2
2
12
35
11
10
21a
4
8b
8
5
8a
9
6b
37
38

Fig. 2.

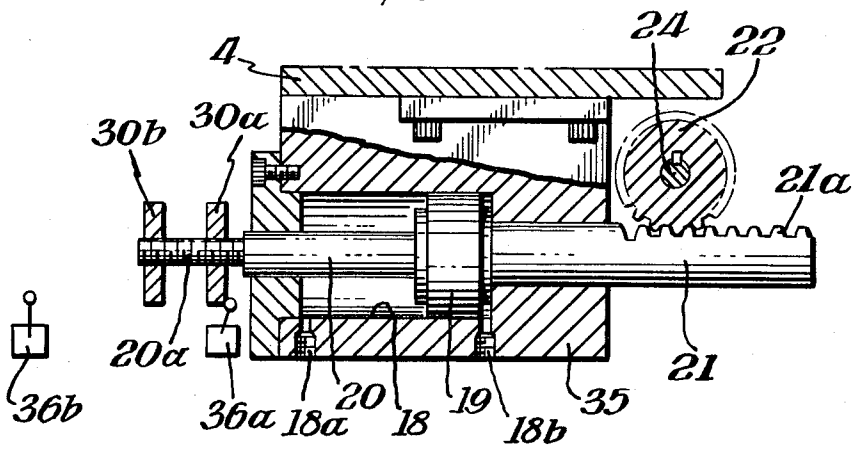
4
24
22
30b
30a
21a
20a
36b
36a
18a
20
18
19
18b
35
21

Fig. 3.

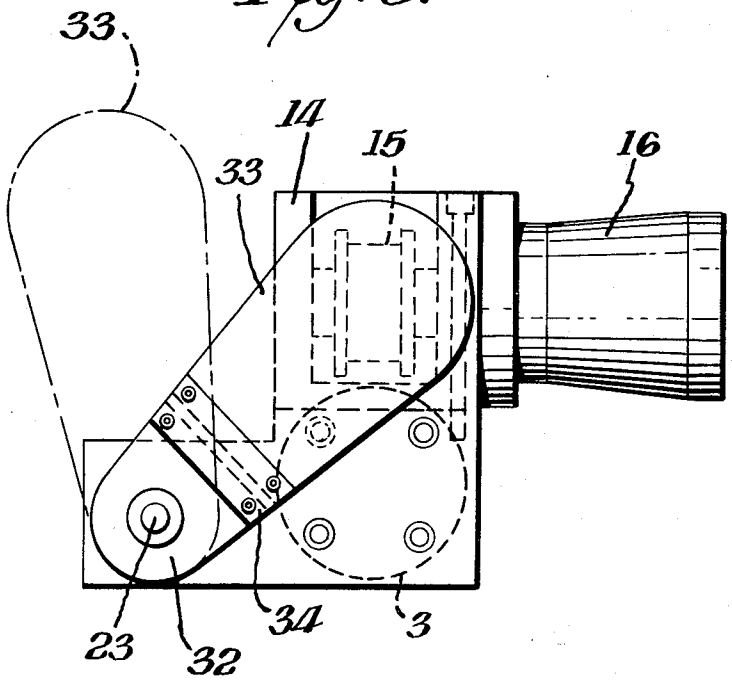
33
14
15
16
33
23
32
34
3

GRINDSTONE DRESSING TOOL PROTECTION DEVICE

BACKGROUND OF THE INVENTION

The present invention relates to a dressing tool for a grindstone, and more particularly to a protection device for the dressing tool that shields the tool from the grindstone except during a grindstone dressing operation.

Most grinding machines include a dressing tool located very close to the grindstone. As is well known, the dressing tool is moved into engagement with the face of the grindstone during the dressing operation. After the dressing operation is completed the dressing tool is moved away from the face of the grindstone until the next dressing operation. Frequently, conditions are such that the grindstone breaks apart while it is rotating. In many instances, the grindstone fragments are thrown under significant centrifugal force and fly outwardly in all directions. These fragments often strike and damage the dressing tool which is located close to the grindstone. As is well known, a dressing tool in the form of a diamond dressing roller is very expensive and a broken one represents a significant economic loss. Hence, the demand for some type of protection for the dressing tool is great.

SUMMARY OF THE INVENTION

Accordingly, it is an object of the present invention to provide a grinding tool protection device which shields the dressing tool from flying grindstone fragments which might otherwise damage the dressing tool.

In accordance with the present invention a device for dressing a grindstone comprises support structure with a grindstone rotatably mounted to the support structure. A dresser housing is fixed to the support structure, and a ram is supported by and slidably fitted to the dresser housing. The ram is moved toward and away from the grindstone, and a grindstone dressing tool is mounted at the end of the ram opposite the grindstone for periodic dressing of the grindstone. A dressing tool protector shield is mounted between the dressing tool and the grindstone, and motivating structure is provided for moving the shield into and out of alignment with the dressing tool and the grindstone so that the tool is protected by the shield when the shield is positioned between the tool and the grindstone. The motivating structure for moving the protector shield into and out of alignment with the dressing tool and the grindstone preferably includes a drive shaft connected to the shield and a motor for rotating the drive shaft to thereby move the shield. Also, the connection between the drive shaft and the protector shield preferably includes a shock absorber in the form of a leaf spring. Moreover, the dressing tool may be in the form of a dressing roller with a motor for rotating the roller during a dressing operation of the grindstone.

BRIEF DESCRIPTION OF THE DRAWING

Novel features and advantages of the present invention in addition to those mentioned above will become apparent to those skilled in the art from a reading of the following detailed description in conjunction with the accompanying drawing wherein:

FIG. 1 is a longitudinal sectional view of a device for dressing a grindstone according to the present invention;

FIG. 2 is a sectional view taken along line 2—2 of FIG. 1; and

FIG. 3 is an end elevation illustrating the dressing tool protector device of the present invention.

DETAILED DESCRIPTION OF THE INVENTION

Referring in more particularity to the drawing, FIG. 1 shows a grinder table 1 with a grindstone 17 rotatably mounted to the table by a shaft (not shown). A dresser housing 2 is rigidly fitted to the grinder table 1. A ram 3 is slidably fitted within the housing 2 and is prevented from rotating relative to the housing by a pin 3*a* in the housing which fits within a longitudinal slot 3*b* in the ram. Thus, the ram is only capable of axial movement within the dresser housing 2. The end of the ram 3 carries a support member 14 upon which a diamond dressing roller 15 is rotatably mounted. The dressing roller 15 is driven by a hydraulic motor 16 fixed to the support member 14.

The rear of the dresser housing 2 carries a casing 4. The casing supports a feed shaft 6 having a feed screw 6*a* formed at the end thereof. The feed screw 6*a* meshes with an internally threaded sleeve 7 attached to the ram 3. As shown in FIG. 1, a cylinder block 5 is secured to the casing 4. The block 5 has a fast feed cylinder 8 with a piston 9 therein for reciprocating the dressing roller 15 and thereby moving it toward and away from the face of the grindstone 17. The piston is connected to the ram 3 by the feed screw 6. The left face of the piston 9, as viewed in FIG. 1, carries an extended shaft 6*b* integrally formed on the shaft 6 which in turn carries an adjustable dog 37. Ports 8a, 8b are provided in the cylinder block 5 for motivating the piston 9. Also, the feed shaft 6 has a gear 10 that meshes with an intermediate gear 11 which in turn meshes with another gear 12 secured to an infeed shaft 13 connected to a conventional infeed motivating means (not shown).

The casing 4 also carries a cylinder block 35, as best illustrated in FIG. 2. A cylinder 18 is formed in the block and a piston 19 having rods 20, 21 is fitted inside the cylinder 18 of the block 35. The threaded end portion 20a of the piston rod 20 carries dogs 30*a*, 30*b* while the piston rod 21 has a rack 21*a* formed thereon. Ports 18*a*, 18*b* in the block 35 are connected to a pressurized fluid supply source (not shown) for manipulating the piston 19.

A rotatable shaft 24 is positioned on the outside of the dresser housing 2. The shaft is supported by bearings 25, 25 and the axis of rotation of the shaft is substantially parallel to the axis of the feed shaft 6. A gear 22 is secured at one end of the rotating shaft 24. The gear 22 meshes with the rack 21*a* on the piston rod 21. The other end of the shaft 24 is operably connected to a second shaft 23 by a coupling 26. The coupling has a longitudinal key groove 28 and a key 27 mounted on the rotating shaft 24 forms the axially slidably connection between the coupling 26 and the shaft 24.

The drive shaft 23 is rotatably mounted by a bearing member 29 integrally formed on the side wall of the support member 14 that carries the diamond dressing roller 15. As mentioned above, one end of the drive

shaft 23 is secured to the coupling 26, and a stop screw 31 provides the positive connection between the shaft 23 and the coupling. The other end of the shaft has a plate 32 fixed thereto. A shock absorber in the form of a leaf spring 34 is secured to the plate 32 and a dressing tool protector shield 33 is secured to the leaf spring. As shown in FIG. 1, the shield 33 is located between the diamond dressing roller 15 and the grindstone 17. This is the position of the shield during the grinding operation. However, when the grinding tool is dressed, the shield is first moved away from its position between the dressing tool and the grindstone.

The operation of the structure of the present invention is as follows. First, prior to the actual dressing operation of the grindstone fluid pressure is introduced into the port 18*b* of the cylinder 18. This causes the piston 19 to move to the left, as viewed in FIG. 2. As the piston so moves, the gear 22 meshing with the rack 21*a* on the shaft 21 rotates and thereby causes the drive shaft 24 to rotate. As is clear, the rotating shaft 24 causes the coupling 26 to rotate which in turn causes the drive shaft 23 to rotate in the same direction. The protector shield 33 being connected to the shaft 23 is thereby moved from the position shown in FIG. 3 to the secondary position shown in FIG. 3 in phantom outline. Next, the dog 30*b* associated with the piston rod 20 actuates the limit switch 36*b* to indicate that the shield 33 is positioned away from its protective position between the dressing roller 15 and the grindstone 17.

Upon actuation of the limit switch 36*b* pressurized fluid is supplied to the fast feed cylinder 8 via the inlet port 8*a*. This causes the piston 9 to move to the right, as viewed in FIG. 1, which piston causes the shaft 6, ram 3 and the coupling 26 to move relative to the rotatable shaft 24 in an axial direction toward the grindstone 17. Ultimately, the piston 9 reaches the end of its forward movement and stops. At this position the diamond dressing roller 15 at the end of the ram 3 is usually located directly adjacent the outer peripheral face of the grindstone 17. Next, the infeed shaft 13 is rotated and this rotation is transmitted to the infeed shaft 6 via the gearing 12, 11, 10. Rotation of the feed shaft 6 causes the ram to move closer to the grindstone 17 whereby the diamond dressing roller 15 engages the peripheral face of the grindstone to dress the grindstone. As explained above, the dresser roller 15 is rotated by the hydraulic motor 16 during the actual dressing operation.

After the grindstone is dressed to the desired degree, the roller 15 is withdrawn by reverse rotation of the infeed shaft 13. The amount of withdrawal of the shaft 6 is slightly less than the amount of forward movement thereof whereby the dressing roller is accurately positioned for the next dressing operation. At the same time, pressurized fluid is introduced into the port 8*b* of the fast feed cylinder 8 to thereby further retract the ram 3 to its original starting position. The dog 37 actuates the limit switch 38 which causes pressurized fluid to flow into the cylinder 18 via the inlet port 18*a*. The piston 19 then slides to the right, as viewed in FIG. 2, which causes the gear 22 to rotate in a direction opposite to its previous rotation. Rotation of the gear 22 is transmitted to the protector shield 33 via the shafts 23, 24. Ultimately, the shield 33 swings back to its protective position directly between the dressing roller 15 and the grindstone 17. This position is best shown in FIG. 3. Ultimately, limit switch 36*a* is actuated by the dog 30*a* on the piston rod 20 which confirms that the protector shield 33 is in its specified protective position. The hydraulic motor 16 then stops and the grinding operation with the grindstone 17 can then be resumed.

As mentioned above, the protector shield of the present invention operates to protect the expensive diamond dressing roller during actual grinding of a workpiece with the grindstone 17. Often, the grindstone is broken during the grinding operation and fragments fly away from the stone under great centrifugal force. The shield 33 protects the dressing roller from damage which might otherwise occur if the flying grindstone fragments were allowed to strike the roller.

In the claims:

1. In a device for dressing a grindstone comprising support structure, a grindstone rotatably mounted to the support structure, a dresser housing fixed to the support structure, a ram supported by and slidably fitted to the dresser housing, means for moving the ram toward and away from the grindstone, and a grindstone dressing tool rotatably mounted on the end of the ram opposite the grindstone for periodic dressing of the grindstone, the improvement comprising a dressing tool protector shield rotatably mounted on the ram between the dressing tool and the grindstone, and means for moving the protector shield into and out of alignment with the dressing tool and the grindstone including a drive shaft operably connected to the protector shield and motivating means mounted on the dresser housing for rotating the drive shaft and thereby rotating the shield protector whereby the dressing tool is protected by the shield when the shield is positioned between the tool and the grindstone.

2. The combination of claim 1 in which the connection between the drive shaft and the protector shield includes shock absorber means.

3. The combination of claim 2 in which the shock absorber means comprises a leaf spring.

* * * * *