US00D621667S

(12) United States Design Patent

Ablo

(10) Patent No.: US D621,667 S
(45) Date of Patent: ** Aug. 17, 2010

(54) **COVERED CONTAINER**

(75) Inventor: **Famia E. Ablo**, Orlando, FL (US)

(73) Assignee: **Dart Industries, Inc.**, Orlando, FL (US)

(**) Term: **14 Years**

(21) Appl. No.: **29/316,221**

(22) Filed: **Sep. 3, 2009**

(51) **LOC (9) Cl.** **07-07**
(52) **U.S. Cl.** **D7/629**
(58) **Field of Classification Search** D7/601, D7/602, 629, 612–615, 538–542; D9/424–432; 220/780–806, 574–575
See application file for complete search history.

(56) **References Cited**

U.S. PATENT DOCUMENTS

D175,202	S		7/1955	Tupper	
D232,904	S		9/1974	Gregor	
4,471,880	A	*	9/1984	Taylor et al.	220/792
D326,797	S		6/1992	Pomroy et al.	
5,356,026	A	*	10/1994	Andress et al.	206/508
D371,938	S	*	7/1996	Davis	D7/540
D376,512	S	*	12/1996	Klemme	D7/538
D377,733	S		2/1997	Ahern, Jr. et al.	
D379,133	S		5/1997	Ahern, Jr. et al.	
D390,422	S		2/1998	Daenen et al.	
5,868,273	A		2/1999	Daenen et al.	
D420,252	S		2/2000	Loew et al.	
D425,363	S		5/2000	Loew et al.	
D455,614	S		4/2002	Miller et al.	
D460,665	S		7/2002	Lillelund et al.	
D466,364	S		12/2002	Demore	
D480,264	S		10/2003	de Groote et al.	
D482,928	S		12/2003	Liu	
D548,537	S		8/2007	Liu	
D550,503	S		9/2007	Liu	
D551,496	S		9/2007	Ablo et al.	
D551,515	S		9/2007	Ablo et al.	
D575,114	S	*	8/2008	Moghavem	D7/629

* cited by examiner

Primary Examiner—Terry A Wallace
(74) *Attorney, Agent, or Firm*—John A. Doninger

(57) **CLAIM**

The ornamental design for a covered container, as shown and described.

DESCRIPTION

FIG. **1** is a top, front and right side perspective view of a covered container showing my new design;

FIG. **2** is a bottom, rear and left side perspective thereof;

FIG. **3** is a front elevation view thereof;

FIG. **4** is a rear elevation view thereof;

FIG. **5** is a right side elevation view, the left side elevation being a mirror image thereof;

FIG. **6** is a top plan view thereof;

FIG. **7** is a bottom plan view thereof;

FIG. **8** is a top, front and right side perspective view of a second embodiment of the covered container showing my new design;

FIG. **9** is a bottom, rear and left side perspective thereof; and,

FIG. **10** is a top plan view thereof.

1 Claim, 5 Drawing Sheets

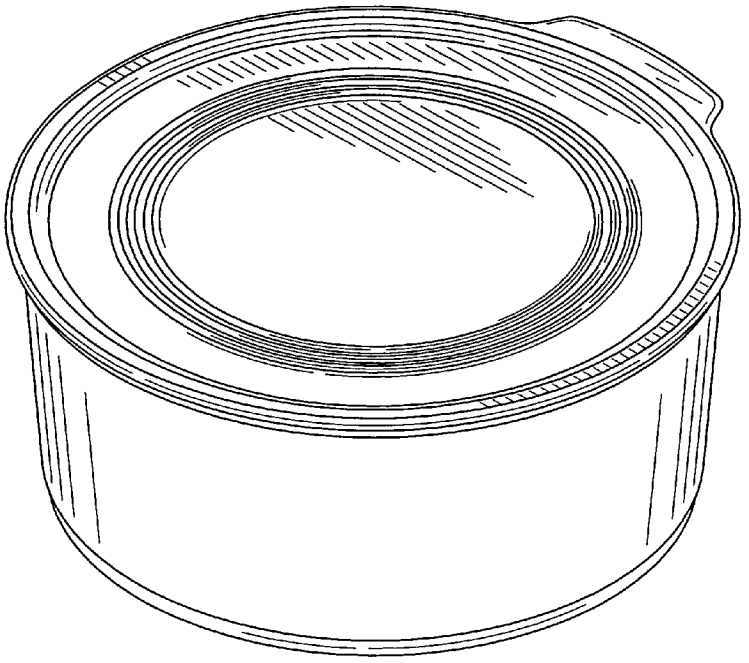

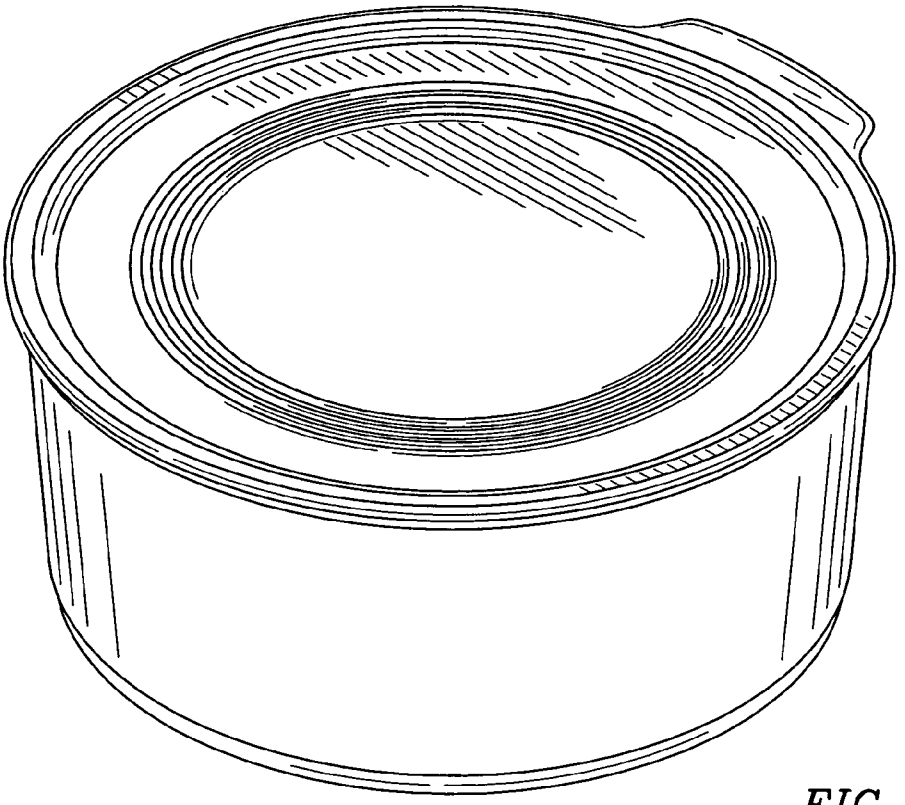

FIG. 1

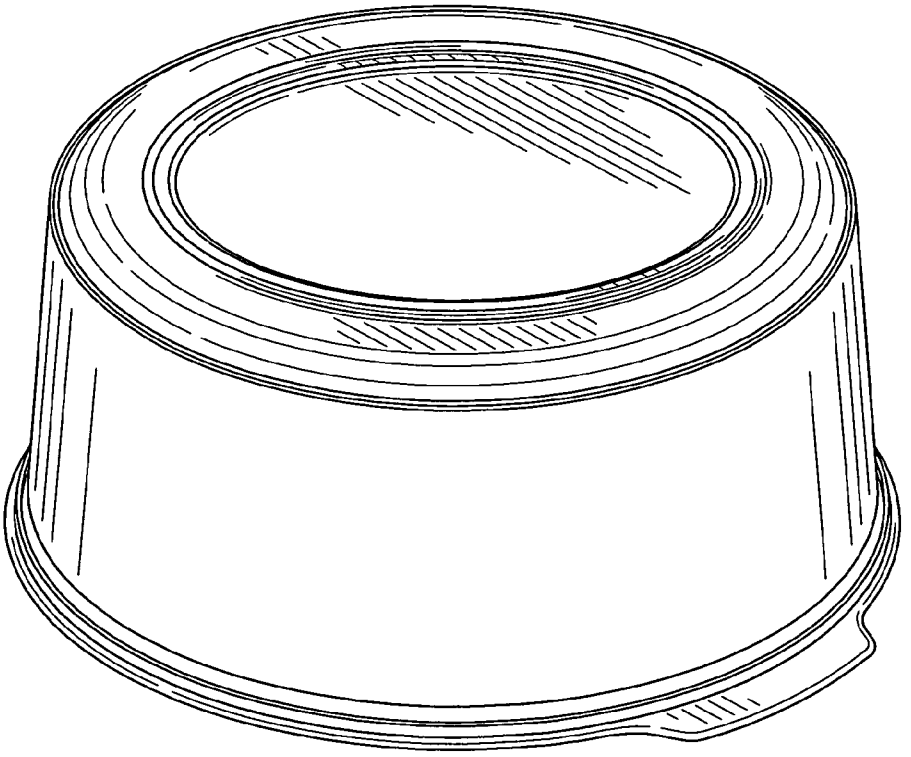

FIG. 2

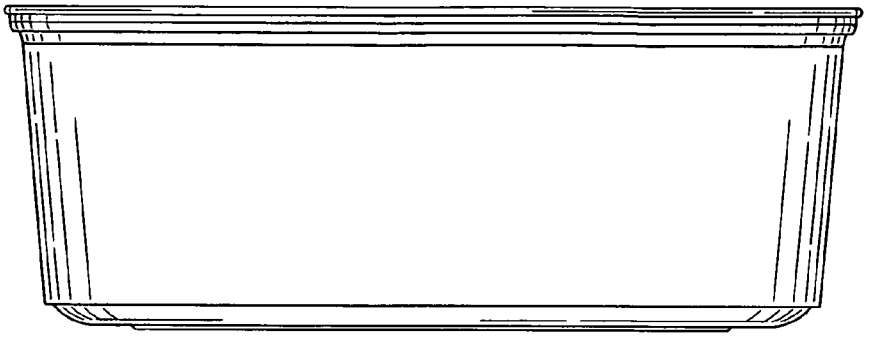

FIG. 3

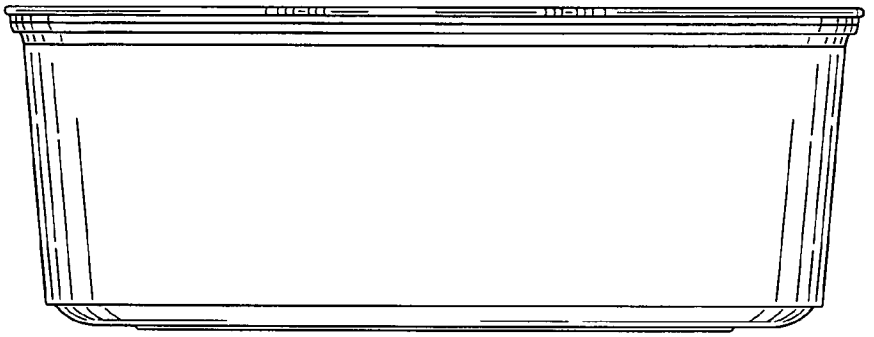

FIG. 4

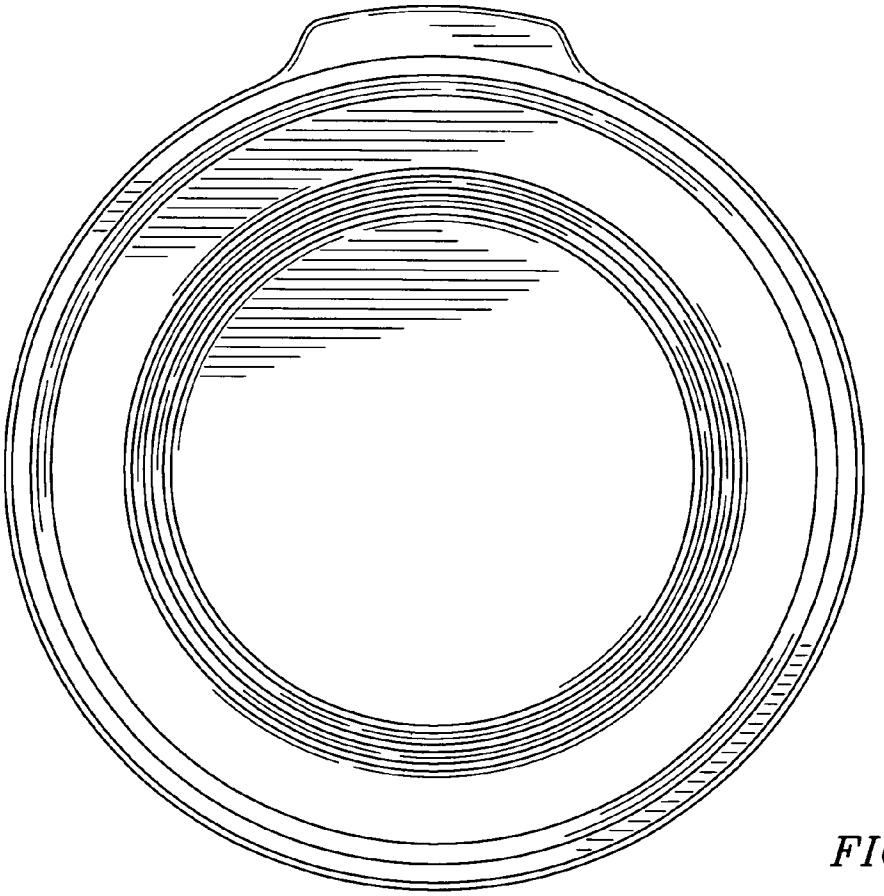

FIG. 6

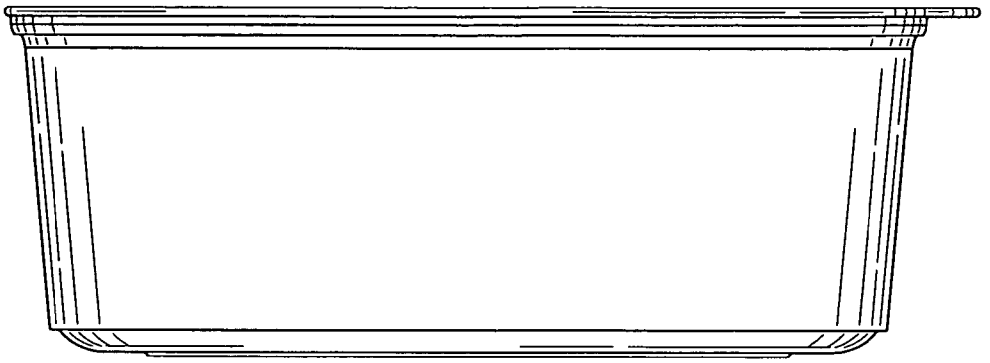

FIG. 5

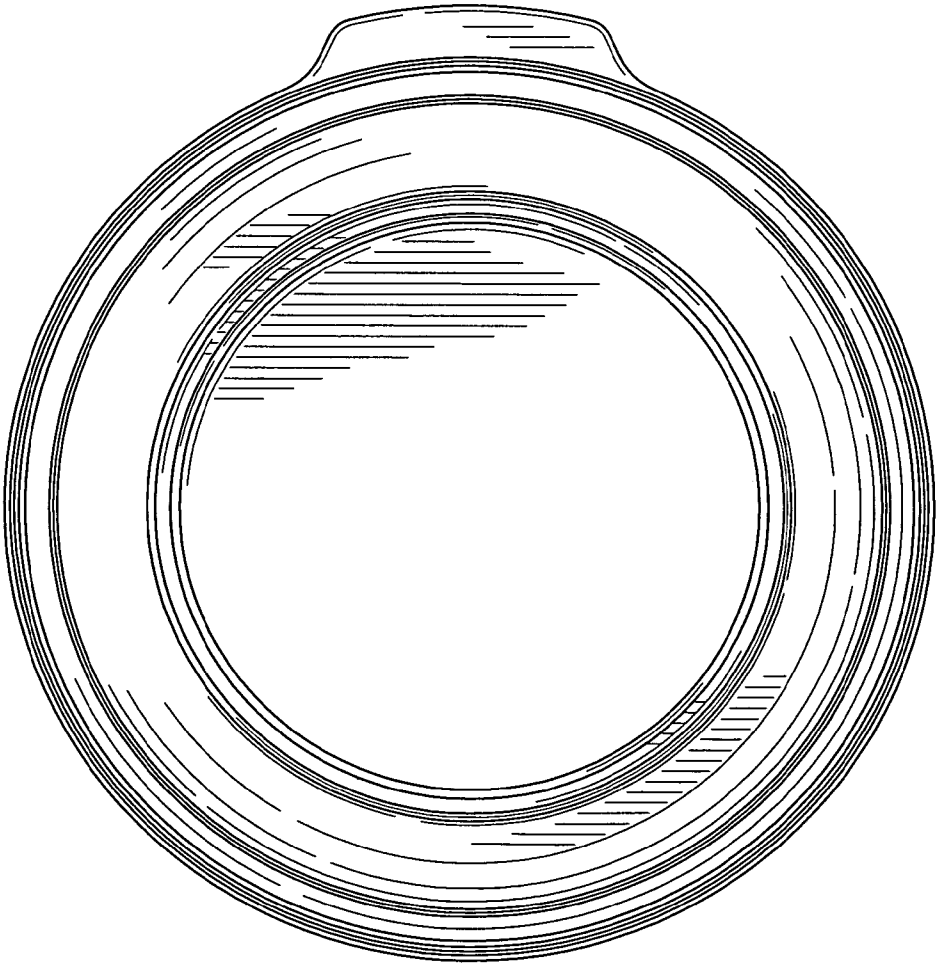

FIG. 7

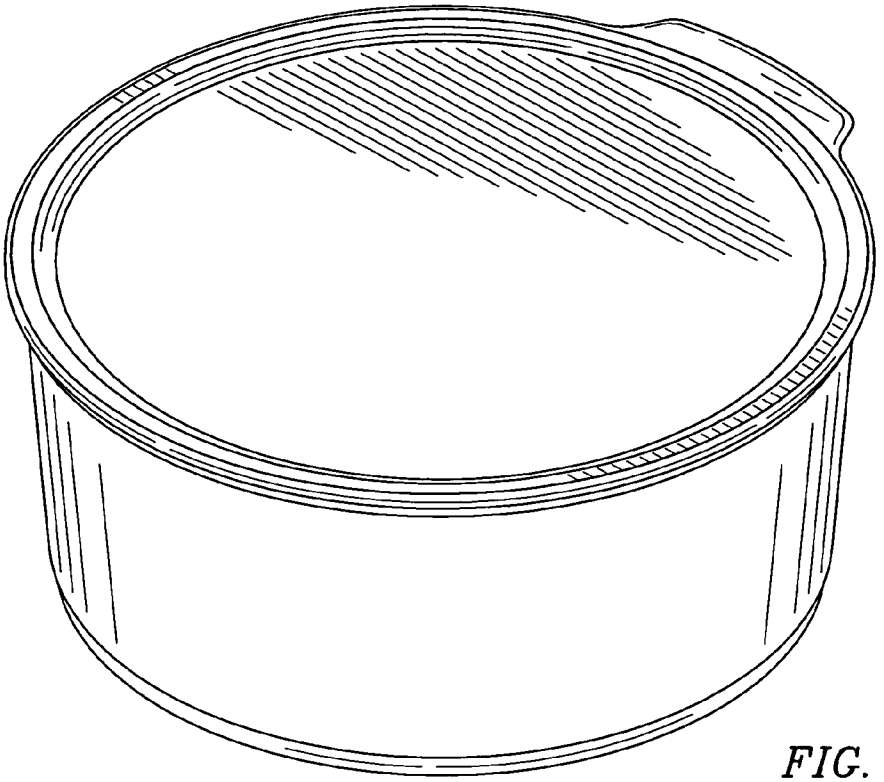

FIG. 8

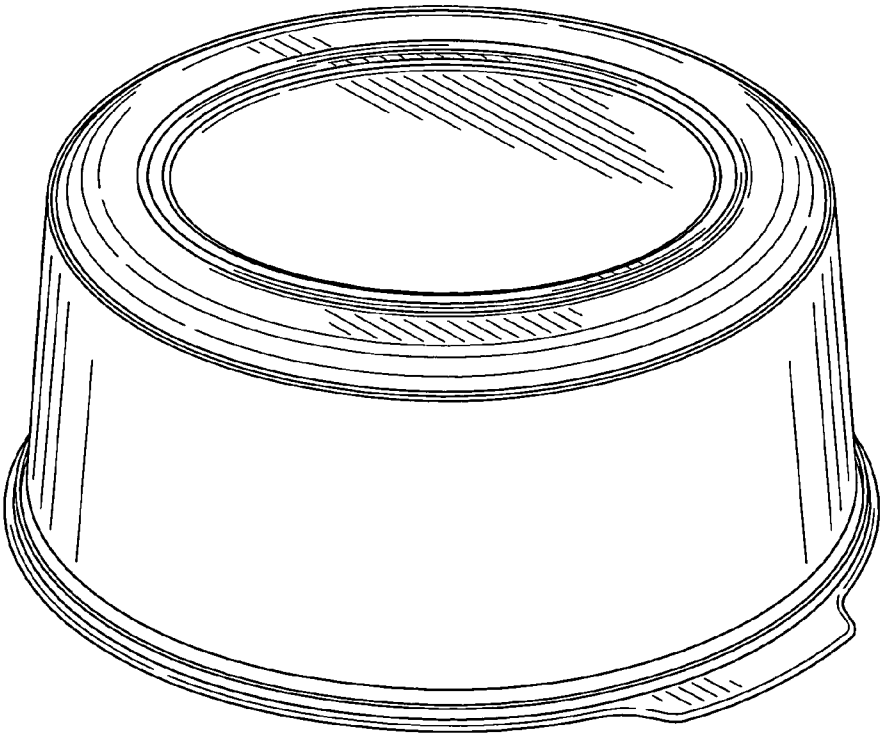

FIG. 9

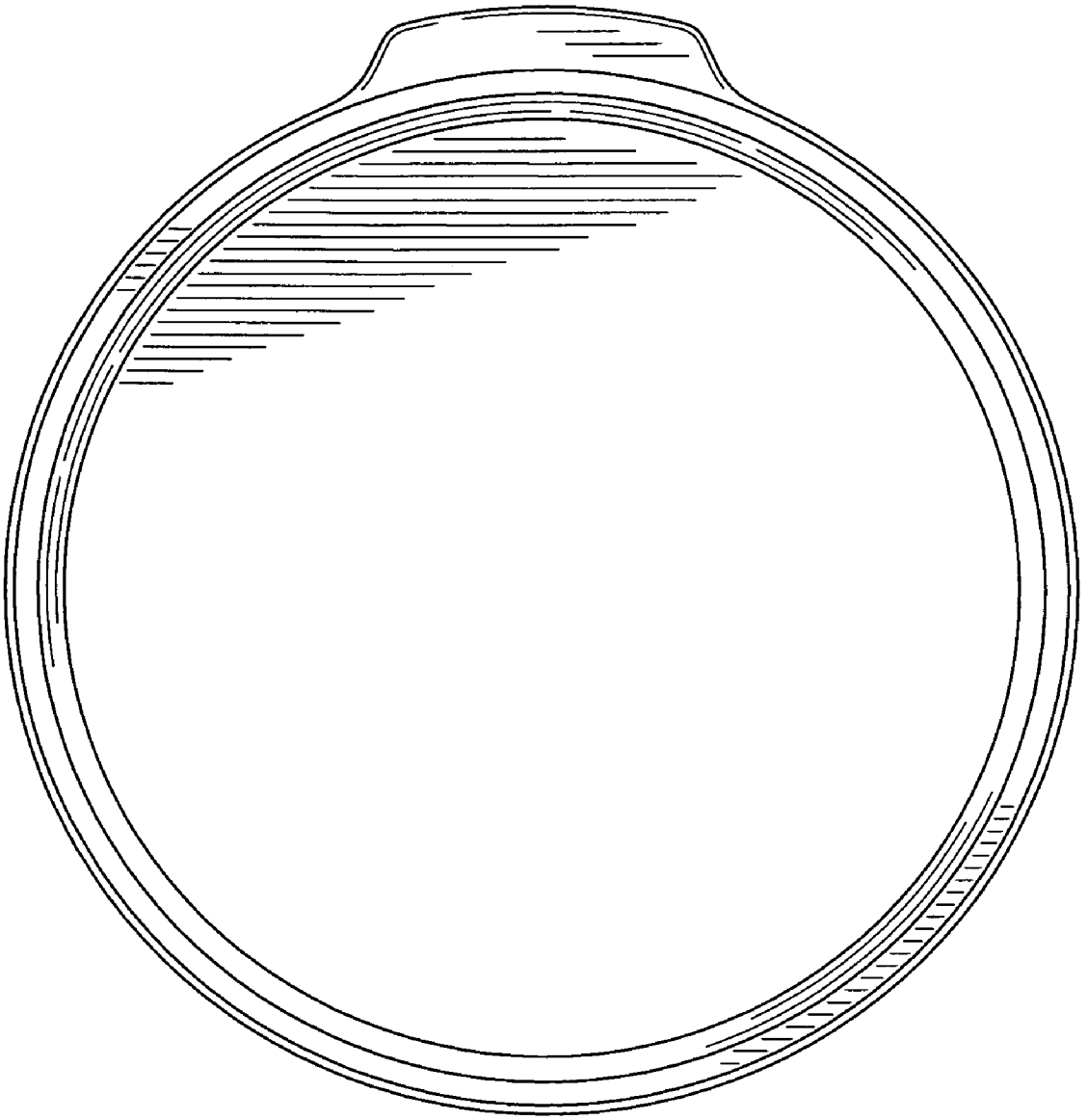

FIG. 10