Sept. 20, 1938. G. N. LINK 2,130,806

DELINTING DEVICE

Filed Jan. 11, 1936

FIG.-1

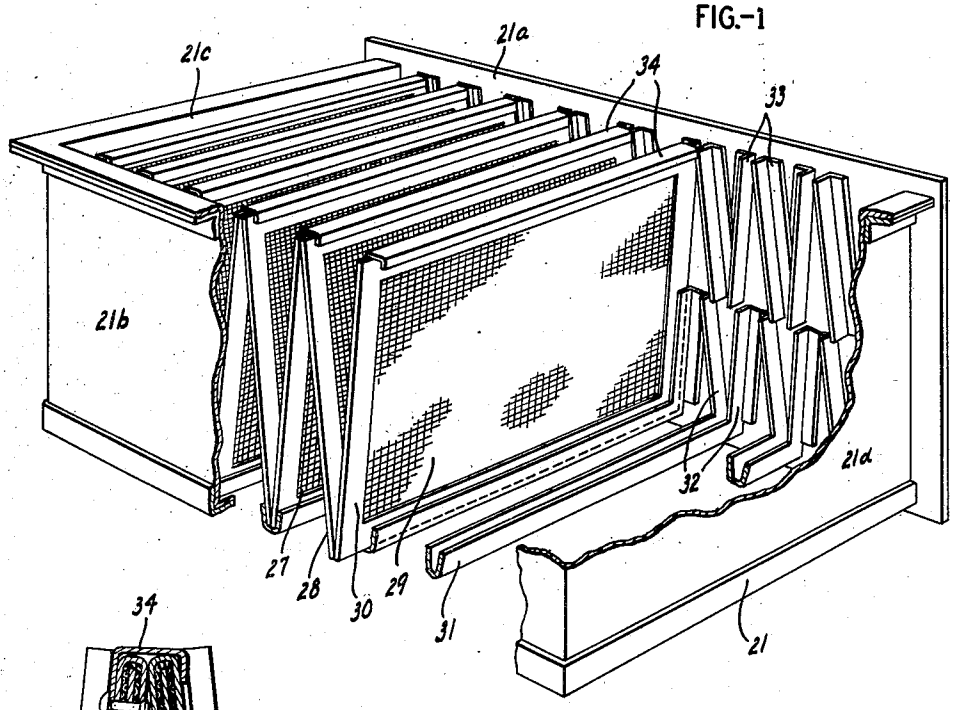

FIG.-2

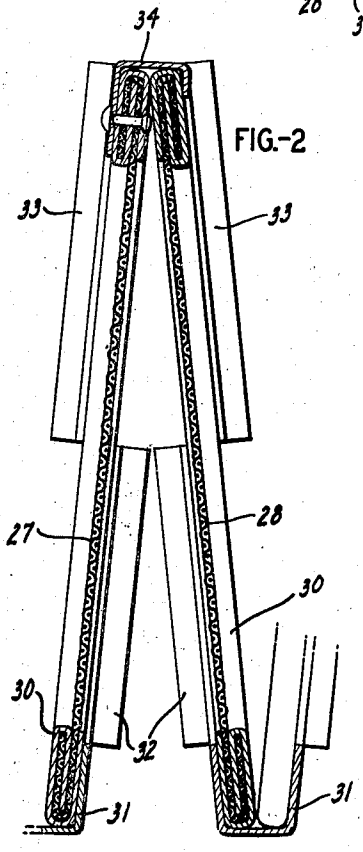

FIG.-3

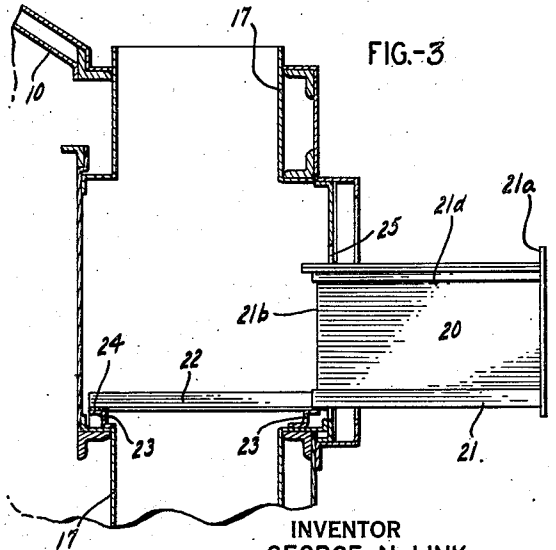

INVENTOR
GEORGE N. LINK
BY Brockett, Hyde, Higley & Meyer
ATTORNEYS

Patented Sept. 20, 1938

2,130,806

UNITED STATES PATENT OFFICE

2,130,806

DELINTING DEVICE

George N. Link, Rochester, N. Y., assignor to The American Laundry Machinery Company, Norwood, Ohio, a corporation of Ohio

Application January 11, 1936, Serial No. 58,753

5 Claims. (Cl. 183—71)

This invention relates to a device for delinting a lint-bearing fluid stream and is particularly useful in fabric drying machines for screening lint out of the drying air stream.

In fabric drying apparatus the drying air stream becomes loaded with lint particles from the articles dried and it is desirable to remove this lint from the air stream whatever disposition of the air is finally made. Oftentimes the air is discharged into a work room and it is necessary to delint the discharged air stream to prevent pollution of the atmosphere of the room. Sometimes the air in a drying machine is recirculated over the articles in the machine and in such case it is desirable to delint the air stream to prevent the building up of lint particles in operating portions of the machine and to improve the quality of the work turned out.

An object of the present invention is to provide a novel delinting device which provides a large screening or filtering area within a comparatively small space.

Another object of the invention is to provide delinting foraminous members in a novel arrangement with relation to the air stream to be delinted.

Another object of the invention is the provision of air screening foraminous members constructed and arranged in such a manner that they are readily accessible for removal and for cleaning.

Other objects of the invention include the provision of novel structures for providing the above described features and a novel arrangement of the delinting device in combination with a fluid duct.

In the drawing, Fig. 1 is a perspective view of the delinting device, certain parts being broken away to show the construction of the frame and the arrangement of the foraminous members; Fig. 2 is an enlarged sectional view taken through a pair of the screens of Fig. 1; while Fig. 3 is a fragmental section showing the delinting device in a position partly withdrawn from the fluid duct of a drying machine or other duct.

For removing lint and similar particles from the fluid stream passing out duct 17, I arrange in said duct a delinting device indicated generally at 20. One of the novel features of my invention is the provision in this delinting device of a frame 21 removably positioned in the duct 17 and carrying within the frame a set of screening members easily removable from the frame so that the entire delinting device may be bodily moved out of the duct for replacement by a similar device or for the easy removal and cleaning of the screening members from the frame, whereupon the frame and the clean screening members may be quickly returned to operative position within the duct 17.

In the particular embodiment illustrated, the frame 21 is a drawer-like arrangement slidable laterally into and out of position in the vertical duct 17 providing peripheral walls of the frame or drawer which extend longitudinally of the duct in a manner to support the screening members in position across the fluid stream passing through the duct. In the arrangement shown the frame 21 is slidable on suitable guide members 22 secured closely against the side walls of the duct 17 and resting upon suitable supports such as the Z-bars 23. If necessary or desirable a filler member 24 may be placed on the Z-bar 23 between the side guiding members 22 so that when the frame is in position in the duct it coacts with its guiding and supporting members so as to cause the fluid stream in duct 17 to pass upwardly through the hollow frame 21.

The frame 21 in the present instance is rectangular in form and is arranged to support the screening members between one pair of parallel walls 21*a* and 21*b* so that the screens form a continuous screening surface, filling the hollow frame and extending continuously between the other pair of walls 21*c* and 21*d*. An opening 25 is provided in the wall of the duct to permit movement of the delinting device into and out of the duct and the wall 21*a* of the delinting frame is arranged to close the opening 25 when the device is positioned in the duct. The wall 21*a* may be provided with suitable hand grips 26 so that the delinting device may be readily moved.

Within the frame 21 are arranged the foraminous screening members 27 and 28, each of these foraminous members comprising a substantially plane perforated or screen-like filler member 29 mounted in a suitable frame 30. By arranging these screening members at an acute angle to the general direction of fluid flow in the duct 17 I accomplish two results. In the first place I provide a screening area many times greater than the cross sectional area of duct 17. Specifically, in the embodiment shown I provide a screening area substantially eight times the cross sectional area of duct 17. In the second place by placing screening members at an acute angle to the air stream the practical effect is to present screening openings having the effect of a much finer perforation or much finer mesh than if the air struck the screening members substan-

tially at right angles. This provides a very satisfactory delinting effect when the screens are in the duct while providing screens of such mesh that they are more easily cleaned when removed for that purpose.

I provide a novel arrangement of the screening members within the frame 21 so as to present a continuous zigzag effect from side to side of the framework. This is accomplished by having each foraminate screening member on one side contacting the adjacent member at the upstream edge and on the other side contacting the adjacent member at the downstream edge. Of course the last screening member on each side engages the side walls 21c or 21d so as to prevent free air discharge at these points.

The mounting means for the screening members comprises channel members 31 near the bottom of the frame rigidly secured to the walls 21a and 21b in position to receive the upstream meeting edges of two adjacent screening members. On the walls 21a and 21b are arranged flange members 32 and 33 for supporting the screening members in the slanting position shown in Fig. 1 in such a manner that they are slidable between the guiding flange members for insertion and removal in the frame. In the particular embodiment shown the channel 31 has the portions 32 extending upwardly and bent in the special manner shown to provide angle guiding members extending upwardly for substantially half the height of the frame 21 and the members 33 are angle members rigidly secured to the walls 21a and 21b to engage the side portions of the screening members along the upper vertical half of the frame 21. The members 32 lie within the diverging portion of the V-formation provided between two adjacent screens while the members 33 lie upon the outside of this same V-formation, thus providing the best arrangement of the guiding members in the repeating series of V-formations while at the same time providing contact and guiding means against opposite faces of each of the screening members. It will be noted in Figs. 1 and 2 that the guiding members 33 begin substantially where the guiding members 32 leave off so that between them they coact to substantially seal the joint where the screening members substantially engage the side walls 21a and 21b while the channel member 31 seals the upstream meeting edge of a pair of adjacent screening members. Means is also provided for sealing the downstream meeting edge of adjacent screens and in the particular form shown each of the screening members 27 has rigidly secured to its upper edge a channel-like member 34 which when the screens are in operative position engages over the top of and embraces an adjacent screen 28 as best illustrated in Figs. 1 and 2. It will be obvious from the above description that the foraminous screening members 27 and 28 are easily removed and inserted through the open upper side of the frame 21 when the frame is moved outside of the duct 17 and in the form shown the members 28 must necessarily be inserted first and removed last because of the special arrangement of the sealing members 34.

While the arrangement shown permits the complete removal of frame 21 from the duct for the purpose of removing or cleaning the screening members, it will be obvious from an inspection of Fig. 3 that the drawer-like frame 21 might be arranged to permit removal of the screening members when the frame is in the position of Fig. 3, that is to say, the drawer-like frame could be pulled far enough through the opening 25 so that the rear wall 21b thereof forms substantially a side wall for the duct 17 while the screens 27 and 28 are cleaned and replaced.

It will also be obvious that the structure described in connection with my delinting device need not necessarily be placed for horizontal removal of the frame 21 from a vertical duct but the device might be arranged at other positions in any machine so that the frame 21 is movable sideways from the duct in which it is placed.

What I claim is:

1. A device for delinting a lint-bearing fluid stream, comprising a portable frame having peripheral walls forming a duct through said frame, a series of separate foraminate members removably mounted in said frame between said walls to provide a continuous zigzag arrangement transversely of said duct, foraminate member mounting means substantially sealing the joints between said members and said walls while permitting removal of said members from said frame, and each foraminate member on one side contacting the adjacent member at the upstream edge and on the other side contacting the adjacent member at the downstream edge.

2. A device for delinting a lint-bearing fluid stream, comprising a portable frame having peripheral walls rectangularly arranged in plan and forming duct means open at the ends and permitting fluid flow through said frame, a series of substantially plane foraminous members removably mounted in said frame at an angle to the general direction of fluid flow through said frame, said members being arranged to form a substantially continuous screening surface between the walls of said frame, and mounting means for said foraminous members comprising guiding flanges secured to the inwardly facing surfaces of one pair of parallel walls of said rectangle and extending toward the open ends of said frame, said flanges extending along substantially the entire edges of said members adjacent said one pair of walls to form sealing means there, said flanges being arranged to hold said members in a continuous series between the other pair of parallel walls of said rectangle, and each foraminate member on one side contacting the adjacent member at the upstream edge and on the other side contacting the adjacent member at the downstream edge.

3. A device as in claim 2 in which said foraminous members are inclined to the vertical and arranged in continuous zigzag formation, an upturned channel embracing each pair of lower meeting edges of said members, said channels being secured to said frame, and a removable downturned channel embracing each pair of upper meeting edges.

4. A device for delinting a lint-bearing fluid stream, comprising a hollow drawer-like frame, said frame having peripheral walls rectangularly arranged in plan and providing duct means open at the ends, a series of substantially plane foraminous members removably mounted in said frame at an angle to the general direction of fluid flow through said frame, said members being arranged to form a substantially continuous screening surface between the walls of said frame, and mounting means for said foraminous members comprising guiding flanges secured to the inwardly facing surfaces of one pair of parallel walls of said rectangle, said flanges extending

along substantially the entire edges of said members adjacent said one pair of walls to form sealing means, said flanges being arranged to hold said members in a continuous series between the other pair of parallel walls of said rectangle, each foraminate member on one side contacting the adjacent member at the upstream edge and on the other side contacting the adjacent member at the downstream edge, and channel members embracing the upstream and downstream meeting edges of said foraminous members in sealing relationship, at least one of said channel members being secured to one foraminous member and adapted to overlap the adjacent edge of another member as said one member is inserted in the frame.

5. A device for delinting a lint-bearing fluid stream, comprising a hollow drawer-like frame, said frame having peripheral walls rectangularly arranged in plan and providing duct means open at the ends, a series of substantially plane foraminous members removably mounted in said frame at an angle to the general direction of fluid flow through said frame, said members being arranged to form a substantially continuous screening surface between the walls of said frame, and mounting means for said foraminous members comprising guiding flanges secured to the inwardly facing surfaces of one pair of parallel walls of said rectangle, said flanges extending along substantially the entire edges of said members adjacent said one pair of walls to form sealing means, said flanges being arranged to hold said members in a continuous series between the other pair of parallel walls of said rectangle, each foraminate member on one side contacting the adjacent member at the upstream edge and on the other side contacting the adjacent member at the downstream edge, and channel members embracing the upstream and downstream meeting edges of said foraminous members in sealing relationship.

GEORGE N. LINK.