Aug. 15, 1939. E. D. JONES 2,169,321

VALVE MECHANISM OF FUEL PREHEATING CONTROLS

Filed Oct. 1, 1937

Fig. 1

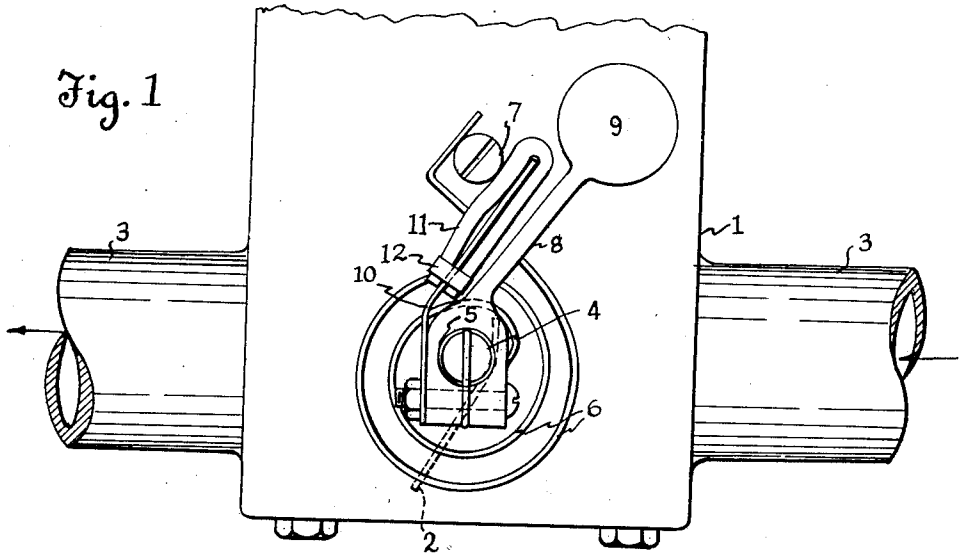

Fig. 2

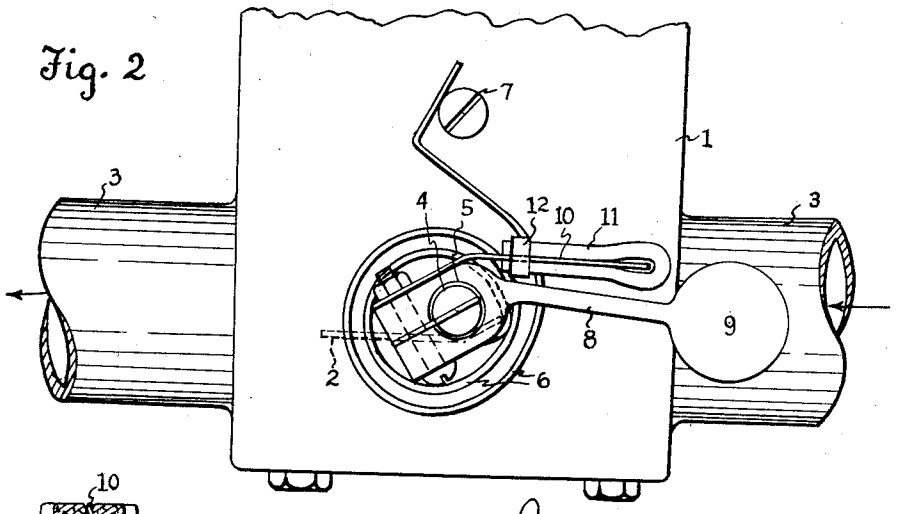

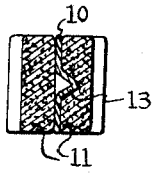

Fig. 3

Fig. 4

Fig. 5

Inventor

Emory D. Jones

By

John G. Alexander.

Attorney

Patented Aug. 15, 1939 2,169,321

UNITED STATES PATENT OFFICE

2,169,321

VALVE MECHANISM OF FUEL PREHEATING CONTROLS

Emory D. Jones, Detroit, Mich.

Application October 1, 1937, Serial No. 166,830

7 Claims. (Cl. 251—152)

This invention relates to fuel preheating controls, and particularly to valve mechanisms of such controls.

Arrangements for preheating the fuel delivered to internal combustion engines, and particularly the motors of automotive vehicles, are in common use, such arrangements in most instances associating a heating chamber with the carburetor or intake manifold of the motor, and diverting a portion of the exhaust gases through such chamber to heat the fuel. While this result has been variously accomplished, a common practice is to so dispose a valve in the exhaust manifold that it yieldably opposes the discharging gases and thus tends to divert a portion of the exhaust through a heating chamber in suitable communication with the manifold. A spring tends to hold the valve in flow-obstructing position, and is of a thermostatic nature, adapting it to readily yield after the motor has become heated, since it is then no longer necessary to use the heating chamber, and in many installations, the valve is counterweighted to reduce the resistance offered by the valve to exhaust flow, under normal running conditions, and to counteract flutter of the valve.

Valve mechanisms, as above described, have been found to develop a quite noticeable and objectionable rattle, particularly during deceleration of the motor, and upon analysis, this annoyance appears due to a periodic overcoming of the thermostatic spring by exhaust impulses acting on the valve, as hereinafter more fully discussed.

The object of the invention is to eliminate the described rattle, and more specifically to associate buffer means with the counterweight arm of the aforementioned valve, so as to absorb the vibrations producing such rattle.

This and various other objects are attained by the construction hereinafter described and illustrated in the accompanying drawing, wherein:

Fig. 1 is a view in side elevation of the valve chamber of a preheating control mechanism, showing the invention applied to the counterweight arm of such a mechanism, the position of the parts corresponding to the closed position of the valve.

Fig. 2 is a similar view, showing the position of the parts corresponding to the open position of the valve.

Fig. 3 is a cross sectional detail taken on the line 3—3 of Fig. 1, showing attachment of a cushioning pad to a buffer spring.

Fig. 4 is a graph representing the progressively diminishing rattle which the present invention eliminates.

Fig. 5 is a graph showing the remedial effect of the present invention.

In these views, the reference character 1 designates a chamber within which a valve 2 is mounted to yieldably oppose the flow of exhaust gases delivered through such chamber by a manifold 3. Thus said valve is fixed upon a rock-shaft 4 which extends exteriorly of the chamber 1 through a bushing 5 in the chamber wall, the projecting portion of said shaft being acted on by a thermostatic spiral spring 6, having its inner end attached to the shaft and its outer end bent to anchor against a screw or the like 7, outwardly projecting from the chamber 1. The tendency of said spring is to maintain a closed position of the valve, in opposition to exhaust gases flowing through said chamber. Because of the thermostatic nature of the spring, the resistance of the latter to exhaust pressure acting on the damper is materially greater when the motor is cold than after warming up of the motor, this effect being utilized to automatically diminish preheating of the fuel mixture, as necessity for such preheating is decreased by warming up of the motor.

For diminishing flutter of the valve, there is further secured to the projecting portion of the shaft 4, a counterbalancing arm 8, weighted at its free end, as indicated at 9, and this arm exercises the further function of establishing the limiting closed position of the valve, through a stop coaction with the screw 7.

Upon any material deceleration of the motor, the consequent diminution of exhaust pressure on the valve permits the spring 6 to engage the arm 8 with the stop screw 7, and each impulse of the immediately following series of diminishing exhaust impulses momentarily overcomes the spring, imposing rapidly alternating reactions on the shaft 4, and causing it to rattle in the bushing 5. The volume of this rattle is of the progressively diminishing nature graphically illustrated in Fig. 4.

The present invention consists in elimination of this rattle, by provision of a suitable pad for absorbing the vibrations which create the rattle. Thus, there is secured to the shaft-engaging end of the arm 8 a buffer spring 10 formed by a suitable strip of sheet metal, said strip being bent to extend alongside of the arm, at a slight divergency thereto, between the arm and the screw 7. Bent around the free end of the spring 10 is a strip of padding material 11, preferably a somewhat resilient fabric. For this purpose a woven

asbestos listing has been found very satisfactory. The pad **11** extends sufficiently toward the fixed end of the spring to form a cushion not only between the spring and stop screw, but also between the spring and arm **8**. The ends of such pad are securely fastened to the arm by a looped sheet metal clip **12**, or equivalent means, and as a further safeguard against release of the pad, it is preferred to indent a small portion of the spring into the pad as indicated at **13** (see Fig. 3). Thus the indentation **13** forms a projection from the spring **10** entering the pad and assisting to properly position the pad on the spring.

The combined shock-absorbing effect of the spring **10** and pad **11** is found adequate to eliminate the above-described vibratory effect on the valve and its rock-shaft, so that the resulting reduced noise effect is as graphically shown in Fig. 5. Thus there is an initial impact of the shaft with the bushing, as exhaust pressure is overcome by the spiral spring **6**, and the resulting sound immediately diminishes to zero, without vibration and rattle.

The described rattle eliminator is desirably simple and very readily installed, the same bolt **14** which has heretofore served to secure the arm **8** on the shaft **4**, being utilized to mount said eliminator on the arm.

The composite nature of the described buffer is vitally important, the resiliency of the spring **10**, and the cushioning nature of the pad **11** both being vital to the desired result. The high efficiency of the attachment is moreover largely due to the fact that the pad is interposed between the spring **10** and the arm **8** as well as between said spring and the stop screw **7**. The latter, it is to be understood, is merely illustrative of a variety of elements that might be carried by the chamber **1** to exercise the same function.

The invention is presented as including all such modifications and changes as come within the scope of the following claims.

What I claim is:

1. In a fuel preheating control for internal combustion engines, a rock-shaft, a valve member on said shaft controlling exhaust flow and urged toward its open position by such flow, a substantially rigid arm on the rock-shaft, a stop coacting with such arm to limit closing travel of the valve member, a spring arm secured to the end portion of said rigid arm engaging the rock-shaft, and having a free end portion projecting between the rigid arm and stop for cushioning impact of the rigid arm and stop.

2. In a fuel preheating control for internal combustion engines as set forth in claim 1, a fabric pad positioned on said spring arm for engagement with said stop.

3. In a fuel preheating control for internal combustion engines as set forth in claim 1, a fabric pad folded to engage opposite faces of said spring arm, and forming a cushion between such faces and the arm and stop.

4. In a device of the character described, the combination with an arm pivotally mounted at one end thereof, and a stop limiting travel of such arm, of a spring arm secured to the mounted end portion of the pivoted arm and projecting along the arm to cushion impact with the stop, an elongated shock-absorbing pad folded around the free end of the spring arm to provide portions engaging opposite faces of the spring arm, and a common means for securing the free ends of said pad to the spring arm.

5. A device as set forth in claim 4, said spring arm having a projection entering said pad to properly position the pad on the spring arm.

6. In a device of the character described, the combination with a rock-shaft, a valve carried by said rock-shaft, a spring urging the rock-shaft to valve-closing position, an arm carried by the rock-shaft, and a stop engageable by said arm to limit closing travel of the valve, of a spring mounted on said arm and acting as a yieldable buffer between the arm and stop, and a pad on the buffer spring having portions at opposite sides of such spring for absorbing stresses due to impact with said stop.

7. In a fuel preheating control for internal combustion engines, a rock-shaft, a valve member on said shaft controlling exhaust flow and urged toward its open position by such flow, a substantially rigid arm on the rock-shaft, a stop coacting with such arm to limit closing travel of the valve member, a thermostatic spring acting on said rock-shaft and tending to maintain a limiting position of said valve, one end of said spring being anchored to said stop, and means for cushioning impact of said arm and stop.

EMORY D. JONES.