Innovation, Sciences et Développement économique Canada
Office de la Propriété Intellectuelle du Canada

Innovation, Science and Economic Development Canada
Canadian Intellectual Property Office

CA 2945533 C 2018/10/16

(11)(21) 2 945 533

(12) BREVET CANADIEN
CANADIAN PATENT

(13) C

(86) Date de dépôt PCT/PCT Filing Date: 2015/04/16
(87) Date publication PCT/PCT Publication Date: 2015/10/22
(45) Date de délivrance/Issue Date: 2018/10/16
(85) Entrée phase nationale/National Entry: 2016/10/11
(86) N° demande PCT/PCT Application No.: US 2015/026126
(87) N° publication PCT/PCT Publication No.: 2015/161047
(30) Priorité/Priority: 2014/04/16 (US61/980,196)

(51) Cl.Int./Int.Cl. *A61J 1/20* (2006.01)

(72) Inventeurs/Inventors:
AUGUSTINI, EMILY, US;
AZIMUDDIN, ANAM, US;
KACZMARSKI, KATERINA, US;
JANG, SAE, YONG, KR;
JUNG, JIWON, KR;
WU, CHEN, US

(73) Propriétaire/Owner:
BECTON DICKINSON AND COMPANY LIMITED, IE

(74) Agent: PIASETZKI NENNIGER KVAS LLP

(54) Titre : DISPOSITIF DE TRANSFERT DE FLUIDE DOTE D'UNE PARTIE MOBILE AXIALEMENT ET DE MANIERE ROTATIVE

(54) Title: FLUID TRANSFER DEVICE WITH AXIALLY AND ROTATIONALLY MOVABLE PORTION

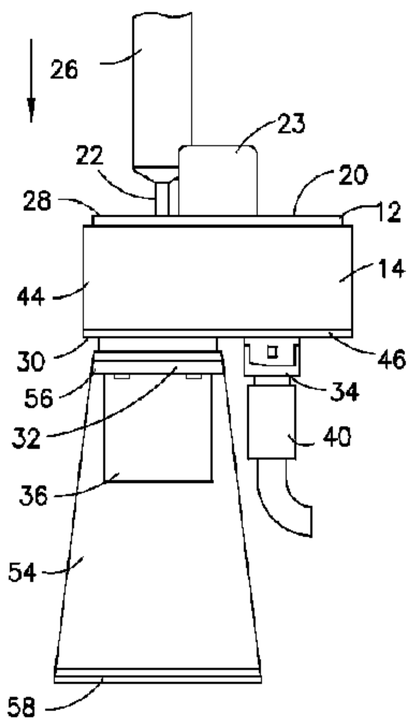

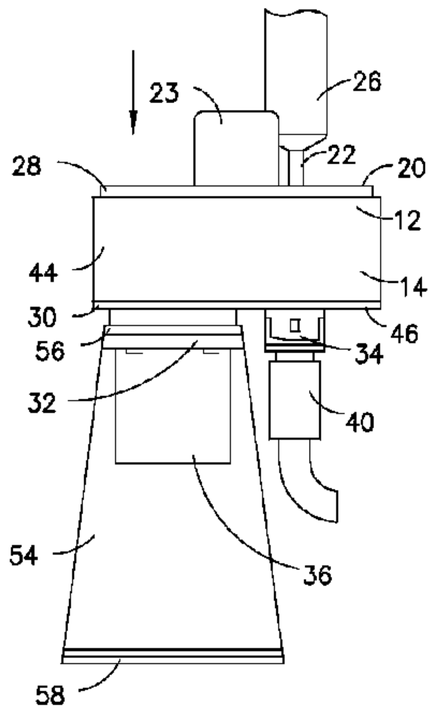

(57) Abrégé/Abstract:
A fluid transfer device (10) includes a first portion (12) having a closed end (18) and an open end (20). The first portion (12) includes a first connector (22) configured to be connected to a first container (26) and including a cannula (24). The fluid transfer device (10) includes a second portion (14) having a closed end (30) and an open end (28). The open end (20) of the first portion (12) extends at least partially into the open end (28) of the second portion (14). The second portion (14) includes a second connector (32) configured to be connected to a second container (36) and a third connector (34) spaced apart from the second connector (32). At least a portion of the first portion (12) is axially and rotationally movable with respect to at least a portion of the second portion (14) from a first position in which the first connector (22) is aligned with the second connector (32) to a second position in which the first connector (22) is aligned with the third connector (34).

(12) INTERNATIONAL APPLICATION PUBLISHED UNDER THE PATENT COOPERATION TREATY (PCT)

(19) World Intellectual Property Organization
International Bureau

(43) International Publication Date
22 October 2015 (22.10.2015)

WIPO | PCT

(10) International Publication Number
WO 2015/161047 A1

(51) International Patent Classification:
A61J 1/20 (2006.01)

(21) International Application Number:
PCT/US2015/026126

(22) International Filing Date:
16 April 2015 (16.04.2015)

(25) Filing Language: English

(26) Publication Language: English

(30) Priority Data:
61/980,196 16 April 2014 (16.04.2014) US

(71) Applicant: **BECTON DICKINSON AND COMPANY LIMITED** [IE/IE]; Pottery Road, Kill O'The Grange, Dun Laoghaire (IE).

(72) Inventor; and
(71) Applicant *(for VC only)*: **AUGUSTINI, Emily** [US/US]; 1606 Enclave Ct., Southlake, Texas 76092 (US).

(72) Inventors: **AZIMUDDIN, Anam**; 51 Manor Lake Estates Dr., Spring, Texas 77379 (US). **KACZMARSKI, Katerina**; 11811 Wake Bluff Dr., Raleigh, North Carolina 27614 (US). **JANG, Sae, Yong**; Hillstate Apt. 101-301, Samseong-dong, Gangnam-gu, Seoul 135-090 (KR). **JUNG, Jiwon**; 103-703 Galmi-ro 64, Uiwang, Gyeonggi, Gyeonggi-do 437-766 (KR). **WU, Chen**; 1206 Chesapeake Ln., College Station, Texas 77845 (US).

(74) Agents: **MILES, Kirk, M.** et al.; The Webb Law Firm, One Gateway Center, 420 Ft. Duquesne Blvd., Suite 1200, Pittsburgh, Pennsylvania 15222 (US).

(81) Designated States *(unless otherwise indicated, for every kind of national protection available)*: AE, AG, AL, AM, AO, AT, AU, AZ, BA, BB, BG, BH, BN, BR, BW, BY, BZ, CA, CH, CL, CN, CO, CR, CU, CZ, DE, DK, DM, DO, DZ, EC, EE, EG, ES, FI, GB, GD, GE, GH, GM, GT, HN, HR, HU, ID, IL, IN, IR, IS, JP, KE, KG, KN, KP, KR, KZ, LA, LC, LK, LR, LS, LU, LY, MA, MD, ME, MG, MK, MN, MW, MX, MY, MZ, NA, NG, NI, NO, NZ, OM, PA, PE, PG, PH, PL, PT, QA, RO, RS, RU, RW, SA, SC, SD, SE, SG, SK, SL, SM, ST, SV, SY, TH, TJ, TM, TN, TR, TT, TZ, UA, UG, US, UZ, VC, VN, ZA, ZM, ZW.

(84) Designated States *(unless otherwise indicated, for every kind of regional protection available)*: ARIPO (BW, GH, GM, KE, LR, LS, MW, MZ, NA, RW, SD, SL, ST, SZ, TZ, UG, ZM, ZW), Eurasian (AM, AZ, BY, KG, KZ, RU, TJ, TM), European (AL, AT, BE, BG, CH, CY, CZ, DE, DK, EE, ES, FI, FR, GB, GR, HR, HU, IE, IS, IT, LT, LU, LV, MC, MK, MT, NL, NO, PL, PT, RO, RS, SE, SI, SK, SM, TR), OAPI (BF, BJ, CF, CG, CI, CM, GA, GN, GQ, GW, KM, ML, MR, NE, SN, TD, TG).

[Continued on next page]

(54) Title: FLUID TRANSFER DEVICE WITH AXIALLY AND ROTATIONALLY MOVABLE PORTION

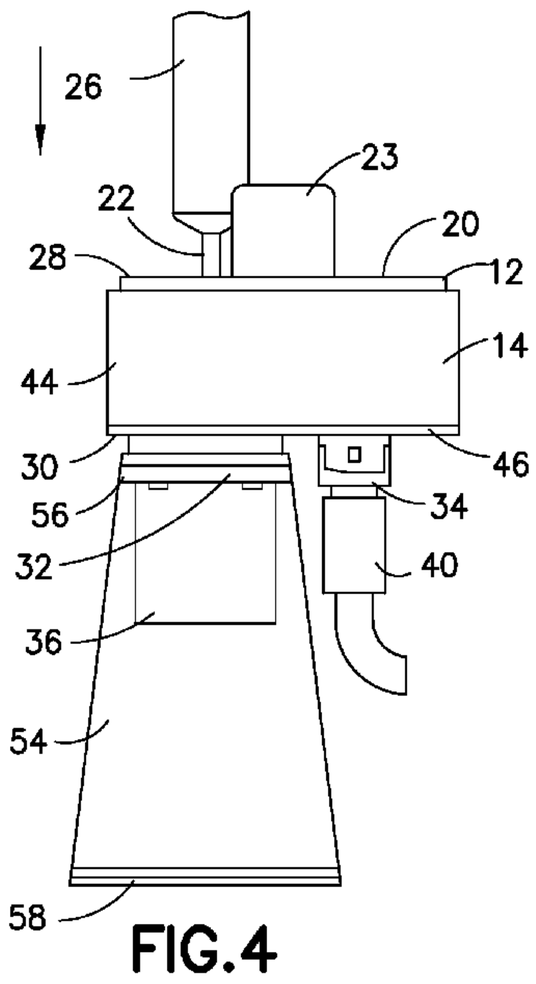

FIG.4

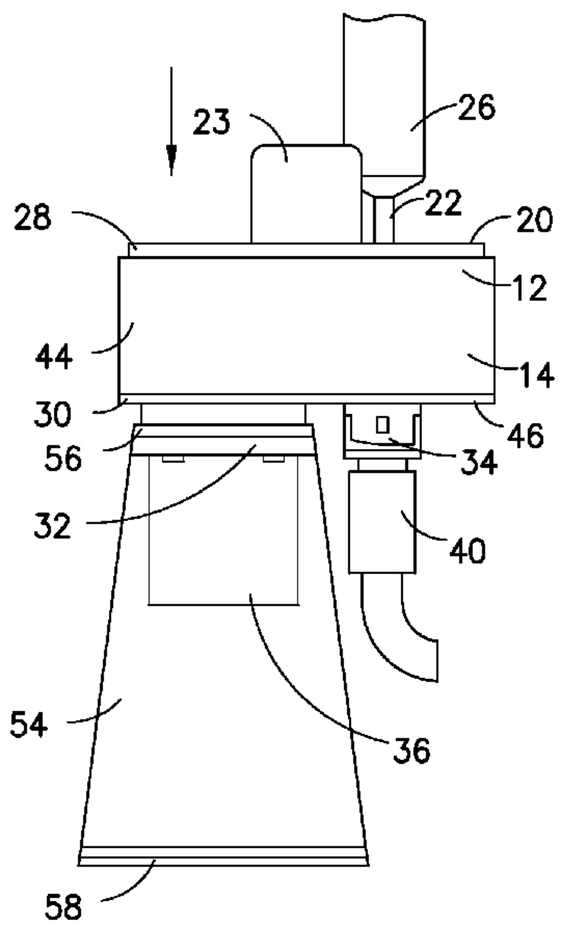

FIG.7

(57) Abstract: A fluid transfer device (10) includes a first portion (12) having a closed end (18) and an open end (20). The first portion (12) includes a first connector (22) configured to be connected to a first container (26) and including a cannula (24). The fluid transfer device (10) includes a second portion (14) having a closed end (30) and an open end (28). The open end (20) of the first portion (12) extends at least partially into the open end (28) of the second portion (14). The second portion (14) includes a second connector (32) configured to be connected to a second container (36) and a third connector (34) spaced apart from the second connector (32). At least a portion of the first portion (12) is axially and rotationally movable with respect to at least a portion of the second portion (14) from a first position in which the first connector (22) is aligned with the second connector (32) to a second position in which the first connector (22) is aligned with the third connector (34).

WO 2015/161047 A1

WO 2015/161047 A1

Declarations under Rule 4.17:

— *as to applicant's entitlement to apply for and be granted a patent (Rule 4.17(ii))*

— *as to the applicant's entitlement to claim the priority of the earlier application (Rule 4.17(iii))*

Published:

— *with international search report (Art. 21(3))*

FLUID TRANSFER DEVICE WITH AXIALLY AND ROTATIONALLY MOVABLE PORTION

BACKGROUND OF THE INVENTION

Field of the Invention

[0001] The present invention relates to a device for transferring fluid from a container to another container or device. More particularly, the present invention relates to a device that provides a closed environment for transferring fluid from a container to another container.

Description of Related Art

[0002] Health care providers reconstituting, transporting, and administering hazardous drugs, such as cancer treatments, can put health care providers at risk of exposure to these medications and present a major hazard in the health care environment. For example, nurses treating cancer patients risk being exposed to chemotherapy drugs and their toxic effects. Unintentional chemotherapy exposure can affect the nervous system, impair the reproductive system, and bring an increased risk of developing blood cancers in the future. In order to reduce the risk of health care providers being exposed to toxic drugs, the closed transfer of these drugs becomes important.

[0003] Some drugs must be dissolved or diluted before they are administered, which involves transferring a solvent from one container to a sealed vial containing the drug in powder or liquid form, by means of a needle. Closed-system transfer devices (CSTDs) are used to prevent such hazardous exposure. However, currently available CSTDs are often complicated and/or costly to manufacture and may be complicated for the healthcare workers to operate. Therefore, there is a need for a CSTD that is easier and more economical to manufacture and easier for healthcare workers to use.

SUMMARY OF THE INVENTION

[0004] In accordance with an aspect of the present invention, a fluid transfer device includes a first portion having a first end and a second end. The first portion includes a first connector configured to be connected to a first container and including a cannula. The fluid transfer device includes a second portion having a first end and a second end. The second end of the first portion extends at least partially into the second end of the second portion. The second portion includes a second connector configured to be connected to a second container and a third connector spaced apart from the second connector. At least a portion of the first portion

CA 2945533 2017-10-17

is axially and rotationally movable with respect to at least a portion of the second portion from a first position in which the first connector is aligned with the second connector to a second position in which the first connector is aligned with the third connector.

[0005] The first and second portions may be cylindrical. The first end of the first portion may be closed and the second end of the first portion may be open. The first end of the second portion may be closed and the second end of the second portion may be open.

[0006] The fluid transfer device may further include a sealing member disposed between a portion of the first portion and a portion of the second portion. The sealing member may be positioned within a groove defined by the first portion.

[0007] The fluid transfer device may include a container sealably engageable with the second connector. The container may be a flexible container.

[0008] The first connector may be a luer fitting and configured to be connected to a syringe. The second connector may be a snap fit connection configured to secure the second connector to a vial. The third connector may be configured to connect to an IV adapter.

[0009] When the first portion is in the first position and axially advanced into the second portion, the cannula of the first connector may be in fluid communication with the second connector. When the first portion is in the second position and axially advanced into the second portion, the cannula of the first connector may be in fluid communication with the third connector.

[0010] The first portion and the second portion may define a chamber, with the first portion axially movable with respect to the second portion from a first position in which the chamber defines a first volume, to a second position in which the chamber defines a second volume, the first volume greater than the second volume.

[0011] The fluid transfer device may include a handle extending from a portion of the first portion for transitioning the first portion from the first position to the second position.

[0012] The third connector may define a passageway, with the third connector including a seal configured to seal the passageway of the third connector.

[0013] In a further aspect, a method of transferring a fluid includes: providing a fluid transfer device having a first portion, a second portion where the first portion extends at least partially into the second portion, a first connector comprising a cannula with the first connector connected to the first portion, a second connector connected to the second portion, and a third connector defined within the second portion and spaced apart from the second connector, where at least a portion of the first portion is movable axially and rotationally with respect to at least a portion of the second portion; engaging a first device with the first connector, engaging a

second device with the second connector, and engaging a third device with the third connector; advancing a portion of the first portion into a portion of the second portion until the cannula provides fluid communication between the first device and the second device; withdrawing a portion of the first portion from a portion of the second portion; rotating the first portion with respect to the second portion until the first connector is aligned with the third connector; and advancing a portion of the first portion into a portion of the second portion until the cannula provides fluid communication between the first device and the third device.

[0014] The first device may be a syringe, the second device may be a vial, and the third device may be an IV adapter.

[0015] The method may further include: providing a container having an open end and a closed end; placing the container around the second device after connecting the second device to the second connector; and sealably connecting the open end of the container around the second connector.

[0016] The method may also include piercing a seal positioned adjacent to a passageway of the third connector with the cannula.

[0017] In a further aspect, a fluid transfer device includes a first portion including a first connector configured to be connected to a first container, and a second portion including a second connector configured to be connected to a second container and a third connector spaced apart from the second connector, with the first connector rotatable relative to the second connector and the third connector. The first and second portions have a first position in which the first connector is aligned with the second connector and a second position in which the first connector is aligned with the third connector, where at least a portion of the first portion is axially movable with respect to at least a portion of the second portion.

BRIEF DESCRIPTION OF THE DRAWINGS

[0018] **FIG. 1** is a side view of a fluid transfer device according to one aspect of the present invention.

[0019] **FIG. 2** is an exploded perspective view of the fluid transfer device of **FIG. 1** according to one aspect of the present invention.

[0020] **FIG. 3** is a side view of the fluid transfer device of **FIG. 1** in an initial position according to one aspect of the present invention.

[0021] **FIG. 4** is a side view of the fluid transfer device of **FIG. 3** after the first portion has been pushed into the second portion to establish fluid communication between the syringe and the medicament container according to one aspect of the present invention.

[0022] **FIG. 5** is a side view of the fluid transfer device of **FIG. 4** after the first portion has been withdrawn from the second portion to disengage fluid communication between the syringe and the medicament container according to one aspect of the present invention.

[0023] **FIG. 6** is a side view of the fluid transfer device of **FIG. 5** after the first portion has been rotated with respect to the second portion to align the syringe with the IV adapter according to one aspect of the present invention.

[0024] **FIG. 7** is a side view of the fluid transfer device of **FIG. 6** after the first portion has been pushed into the second portion to establish fluid communication between the syringe and the IV adapter according to one aspect of the present invention.

DESCRIPTION OF THE INVENTION

[0025] For purposes of the description hereinafter, the words "upper", "lower", "right", "left", "vertical", "horizontal", "top", "bottom", "lateral", "longitudinal", and like spatial terms, if used, shall relate to the described aspects as oriented in the drawing figures. However, it is to be understood that many alternative variations and aspects may be assumed except where expressly specified to the contrary. It is also to be understood that the specific devices and aspects illustrated in the accompanying drawings and described herein are simply exemplary aspects of the invention.

[0026] A fluid transfer device of the present invention is used to provide transfer, including reconstitution if necessary, of a fluid medicament from a first container, often a vial, to a patient in a completely closed system such that the medicament is never released into the atmosphere.

[0027] As shown in **FIGS. 1-7**, the fluid transfer device **10** has a first cylindrical portion **12**, a second cylindrical portion **14**, and at least one sealing member **16** provided between the first cylindrical portion **12** and the second cylindrical portion **14**.

[0028] The first cylindrical portion **12** has an open end **18** and a closed end **20**. A first connector **22** including a central passageway therethrough extends from the closed end **20** of the first cylindrical portion **12**. A needle cannula **24** is provided in fluid communication with the central passageway of the first connector **22** and may extend into the interior of the first cylindrical portion **12**. The first cylindrical portion **12** may also include a handle **23** extending from the first cylindrical portion **12**, such as from the closed end **20**, which is shown in **FIGS. 2-7**, but not **FIG. 1**.

[0029] The first connector **22** may be configured to connect to a syringe **26** and may be a standard male luer fitting that can cooperate with a corresponding female luer fitting on the syringe **26** to attach the syringe **26** to the first cylindrical portion **12** as shown in **FIG. 1**, or

may be a standard female luer fitting that can cooperate with a corresponding male luer fitting on the syringe **26**, although other suitable connectors may be utilized. The needle cannula **24** is connected to the first connector **22** such that the central passageway of the first connector **22** is sealingly engaged with the needle cannula **24** to provide an air-tight and fluid-tight connection therebetween.

[0030] The second cylindrical portion **14** has an open end **28** and a closed end **30**. A second connector **32** including a central passageway therethrough extends from the second cylindrical portion **14**, such as the closed end **30** of the second cylindrical portion **14**. A third connector **34** including a central passageway therethrough also extends from the closed end **30** of the second cylindrical portion **14** and is spaced apart from the second connector **32**.

[0031] The second connector **32** may be adapted for connection to a medicament container **36** that contains a medicament. The container **36** may be a vial having a pierceable septum, as shown in **FIGS. 2-7**. The second connector **32** may be a threaded connector as shown in **FIGS. 3-7** or, as shown in **FIG. 1**, may be a snap-fit connector having vial grip members, hook protrusions, and angled walls, or other suitable connectors. The second connector **32** may include a seal **38**, such as an O-ring, to provide a sealing engagement between the container **36** and the second connector **32**.

[0032] The third connector **34** may be adapted for connection to an IV adapter **40** through which the medicament will be administered to the patient. Such a connector may be any standard connector known in the art including, but not limited to, a connector having a groove including a locking portion wherein the IV adapter **40** has protrusions for engagement with the groove or a connector having protrusions wherein the IV adapter **40** has a groove including a locking portion for engagement with the protrusions. The third connector **34** may further include a seal **42**, such as an elastomeric seal or the like. The seal **42** may be air-tight and fluid-tight and adapted to seal the central passageway of the third connector **34**. Such a seal may also be adapted to allow the passage of the needle cannula **24** through the seal **42** in a manner in which the seal **42** provides an air-tight and fluid-tight seal around the needle cannula **24** and, on removal of the needle cannula **24** from the seal **42**, reseals to provide an air-tight and fluid-tight seal for the central passageway of the third connector **34**.

[0033] The first cylindrical portion **12** and/or the second cylindrical portion **14** may each be formed of a single piece or may comprise a sidewall portion **44** and a closure portion **46** as shown in **FIGS. 1-7**. The sidewall portion **44** and closure portion **46** may be connected using a suitable means that provides an air-tight and fluid-tight seal including, but not limited to, welding or adhesive.

[0034] The outer diameter of the first cylindrical portion **12** is slightly less than the inner diameter of the second cylindrical portion **14** such that a portion of the open end **18** of the first cylindrical portion **12** extends into a portion of the open end **28** of the second cylindrical portion **14**. In this manner, the first cylindrical portion **12** and the second cylindrical portion **14** define an internal chamber. The needle cannula **24** is contained within this chamber.

[0035] The first connector **22**, the second connector **32**, and the third connector **34** are positioned such that the first connector **22** can be axially aligned with either the second connector **32**, or the third connector **34** when the first cylindrical portion **12** is mated with the second cylindrical portion **14** and rotated with respect to the second cylindrical portion **14**.

[0036] The first cylindrical portion **12** is movable axially and rotationally with respect to the second cylindrical portion **14**. The first cylindrical portion **12** is axially movable with respect to the second cylindrical portion **14** from a first position (shown in **FIGS. 3, 5, and 6**) to a second position (shown in **FIGS. 1, 4, and 7**) where the volume of the chamber in the first position is greater than the volume of the chamber in the second position. In addition, the first cylindrical portion **12** is rotatable with respect to the second cylindrical portion **14** from a first position (shown in **FIGS. 1 and 3-5**) where the first connector **22** is aligned with the second connector **32** to a second position (shown in **FIGS. 6 and 7**) where the first connector **22** is aligned with the third connector **34**.

[0037] The sealing member **16** is provided between an outer sidewall surface **48** of the first cylindrical portion **12** and an inner sidewall surface of the second cylindrical portion **14**. As shown in **FIG. 2**, the sealing member **16** may be an O-ring and may sit in a groove **52** in the outer sidewall surface **48** of the first cylindrical portion **12** or the inner sidewall surface of the second cylindrical portion **14**. A second sealing member **16** may also be provided. The sealing member **16** is adapted to provide an air-tight and fluid-tight seal between the first cylindrical portion **12** and the second cylindrical portion **14** yet still allow for the axial and rotational movement of the first cylindrical portion **12** with respect to the second cylindrical portion **14**.

[0038] A container **54** having an open end **56** and a closed end **58** may also be provided. The open end **56** of the container **54** is sealably connected around the second connector **32**. The connection between the second connector **32** and the open end **56** of the container **54** may be a threaded connection or may utilize an elastic band that stretches over the container **54** and fits into a groove in the second connector **32**, although any suitable connection that provides an air-tight and fluid-tight seal may be used.

[0039] The container **54** may be flexible and may be made of plastic or any suitable material that allows it to be fit over the medicament container **36** that contains the medicament and sealed to the second connector **32**. The container **54** may be a plastic bag.

[0040] The fluid transfer device **10** may also include a third cylindrical portion **60** having a first open end **62** and a second open end **64**. The third cylindrical portion **60** has an outer diameter that is smaller than the inner diameter of the first cylindrical portion **12** and the second cylindrical portion **14**. The first open end **62** of the third cylindrical portion **60** abuts the closed end **20** of the first cylindrical member **12** and the second open end **64** of the third cylindrical portion **60** abuts the closed end **30** of the second cylindrical member **14** when the first cylindrical portion **12** is advanced into the second cylindrical portion **14** as shown in **FIGS. 1, 4, and 7**. This results in a more equal distribution of force during this operation. In addition, the third cylindrical portion **60** stabilizes the device during rotation of the first cylindrical portion **12** with respect to the second cylindrical portion **14** as shown in **FIG. 6**. All of the components including the first cylindrical portion **12**, the second cylindrical portion **14**, the first connector **22**, the second connector **32**, the third connector **34**, and the container **54** may be made from any suitable material having the necessary chemical resistance and strength including, but not limited to, polypropylene (PP) and polyvinyl chloride (PVC).

[0041] In use, as shown in **FIG. 3**, the fluid transfer device **10** is placed in a first position where the first connector **22** is axially aligned with the second connector **32** and the first cylindrical portion **12** extends from the second cylindrical portion **14**. A first device, such as a syringe **26** having a diluent, is connected to the first connector **22**. A second device, such as a medicament container **36,** is connected to the second connector **32**. A third device, such as IV adapter **40** or other device for delivery of the medicament to the patient, is connected to the third connector **34**. The container **54** may then be placed over the medicament container **36** and sealingly secured to the second connector **32**.

[0042] As shown in **FIG. 4**, by actuating the handle **23**, the first cylindrical portion **12** is at least partially advanced into the second cylindrical portion **14** reducing the volume of the chamber and causing the needle cannula **24** to enter the medicament container **36** creating a fluid passageway between the syringe **26,** connected to the first connector **22**, and the medicament container **36**, connected to the second connector **32**. The needle cannula **24** may enter the medicament container **36** by piercing a septum on the top of the medicament container **36** or any other arrangement as long as a fluid passageway is provided between the syringe **26** and the medicament container **36**. At this point, if the medicament is ready for administration to the patient, it can be drawn into the syringe **26**. If the medicament is a powder or liquid that

needs to be reconstituted, the necessary fluid/solvent can be injected into the medicament container **36** from the syringe **26** and, upon completion of the reconstitution, the medicament can be drawn into the syringe **26**.

[0043] As shown in **FIG. 5**, after the medicament has been drawn into the syringe **26**, the first cylindrical portion **12** is at least partially withdrawn from the second cylindrical portion **14**, such as by actuating the handle **23,** thus increasing the volume of the chamber defined between the first cylindrical portion **12** and the second cylindrical portion **14**. As the first cylindrical portion **12** is partially displaced from the second cylindrical portion **14**, the needle cannula **24** is removed from the medicament container **36**. Then, as shown in **FIG. 6**, the first cylindrical portion **12** is rotated with respect to the second cylindrical portion **14** until the first connector **22** is axially aligned with the third connector **34**. After rotation of the first cylindrical portion **12**, as shown in **FIG. 7**, a portion of the first cylindrical portion **12** is again pushed into the second cylindrical portion **14** reducing the volume of the chamber defined between the first cylindrical portion **12** and the second cylindrical portion **14**, thereby causing the needle cannula **24** to enter the IV adapter **40** creating a fluid passageway between the syringe **26** connected to the first connector **22** and the IV adapter **40** connected to the third connector **34**. At this point, the medicament can be injected from the syringe **26** into the IV tube for delivery to the patient. This procedure may be repeated until all the medicament has been delivered to the patient.

[0044] The fluid transfer device **10** has at least two advantages over prior closed system transfer devices. First, the number of components is reduced resulting in a corresponding reduction in manufacturing costs. Second, the entire drug reconstitution process and transfer of the drug to the IV bag is contained within one component, so the number of different devices that the user must use to complete this process and the number of actions the user must perform is reduced as compared to prior art transfer devices.

[0045] While the present invention is described with reference to several distinct aspects of a fluid transfer device and method of use, those skilled in the art may make modifications and alterations without departing from the scope and spirit. Accordingly, the above detailed description is intended to be illustrative rather than restrictive.

THE INVENTION CLAIMED IS

1. A fluid transfer device comprising:

a first portion having a first end and a second end, the first portion including a first connector configured to be connected to a first container, the first connector comprising a cannula; and

a second portion having a first end and a second end, wherein the second end of the first portion extends at least partially into the second end of the second portion, the second portion including a second connector configured to be connected to a second container and a third connector spaced apart from the second connector,

wherein at least a portion of the first portion is axially and rotationally movable with respect to at least a portion of the second portion from a first position in which the first connector is aligned with the second connector to a second position in which the first connector is aligned with the third connector.

2. The fluid transfer device of claim 1, wherein the first and second portions are cylindrical.

3. The fluid transfer device of claim 1, wherein the first end of the first portion is closed and the second end of the first portion is open.

4. The fluid transfer device of claim 3, wherein the first end of the second portion is closed and the second end of the second portion is open.

5. The fluid transfer device of claim 1, further comprising a sealing member disposed between a portion of the first portion and a portion of the second portion.

6. The fluid transfer device of claim 5, wherein the sealing member is positioned within a groove defined by the first portion.

7. The fluid transfer device of claim 1, further comprising a container sealably engageable with the second connector.

8. The fluid transfer device of claim 7, wherein the container is a flexible container.

9. The fluid transfer device of claim 1, wherein the first connector is a luer fitting and configured to be connected to a syringe.

10. The fluid transfer device of claim 1, wherein the second connector comprises a snap fit connection configured to secure the second connector to a vial.

11. The fluid transfer device of claim 1, wherein the third connector is configured to connect to an IV adapter.

12. The fluid transfer device of claim 1, wherein, when the first portion is in the first position and axially advanced into the second portion, the cannula of the first connector is in fluid communication with the second connector.

13. The fluid transfer device of claim 12, wherein, when the first portion is in the second position and axially advanced into the second portion, the cannula of the first connector is in fluid communication with the third connector.

14. The fluid transfer device of claim 1, wherein the first portion and the second portion define a chamber, and wherein the first portion is axially movable with respect to the second portion from a first position in which the chamber defines a first volume, to a second position in which the chamber defines a second volume, the first volume greater than the second volume.

15. The fluid transfer device of claim 14, further comprising a handle extending from a portion of the first portion for transitioning the first portion from the first position to the second position.

16. The fluid transfer device of claim 1, wherein the third connector defines a passageway, the third connector comprising a seal configured to seal the passageway of the third connector.

17. A method of transferring a fluid comprising:

providing a fluid transfer device comprising:

a first portion,

a second portion, the first portion extending at least partially into the second portion,

a first connector comprising a cannula, the first connector connected to the first portion,

a second connector connected to the second portion, and

a third connector defined within the second portion and spaced apart from the second connector,

wherein at least a portion of the first portion is movable axially and rotationally with respect to at least a portion of the second portion;

engaging a first device with the first connector, engaging a second device with the second connector, and engaging a third device with the third connector;

advancing a portion of the first portion into a portion of the second portion until the cannula provides fluid communication between the first device and the second device;

withdrawing a portion of the first portion from a portion of the second portion;

rotating the first portion with respect to the second portion until the first connector is aligned with the third connector; and

advancing a portion of the first portion into a portion of the second portion until the cannula provides fluid communication between the first device and the third device.

18. The method of claim 17, wherein the first device is a syringe, the second device is vial, and the third device is an IV adapter.

19. The method of claim 17, further comprising:

providing a container having an open end and a closed end;

placing the container around the second device after connecting the second device to the second connector; and

sealably connecting the open end of the container around the second connector.

20. A fluid transfer device comprising:

a first portion including a first connector configured to be connected to a first container; and

a second portion including a second connector configured to be connected to a second container and a third connector spaced apart from the second connector, the first connector rotatable relative to the second connector and the third connector,

wherein the first and second portions have a first position in which the first connector is aligned with the second connector and a second position in which the first connector is aligned with the third connector, at least a portion of the first portion is axially movable with respect to at least a portion of the second portion.

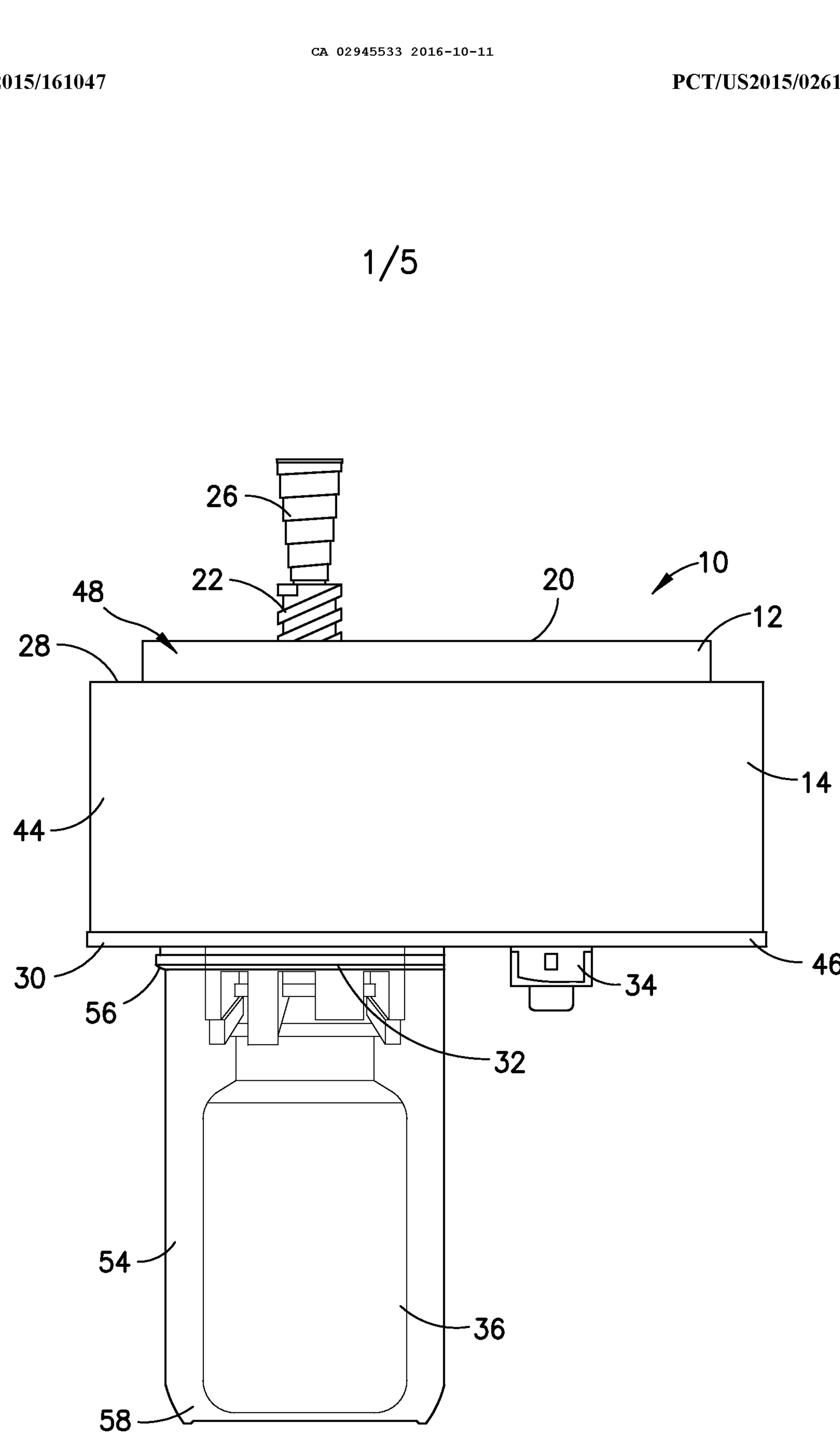

FIG. 1

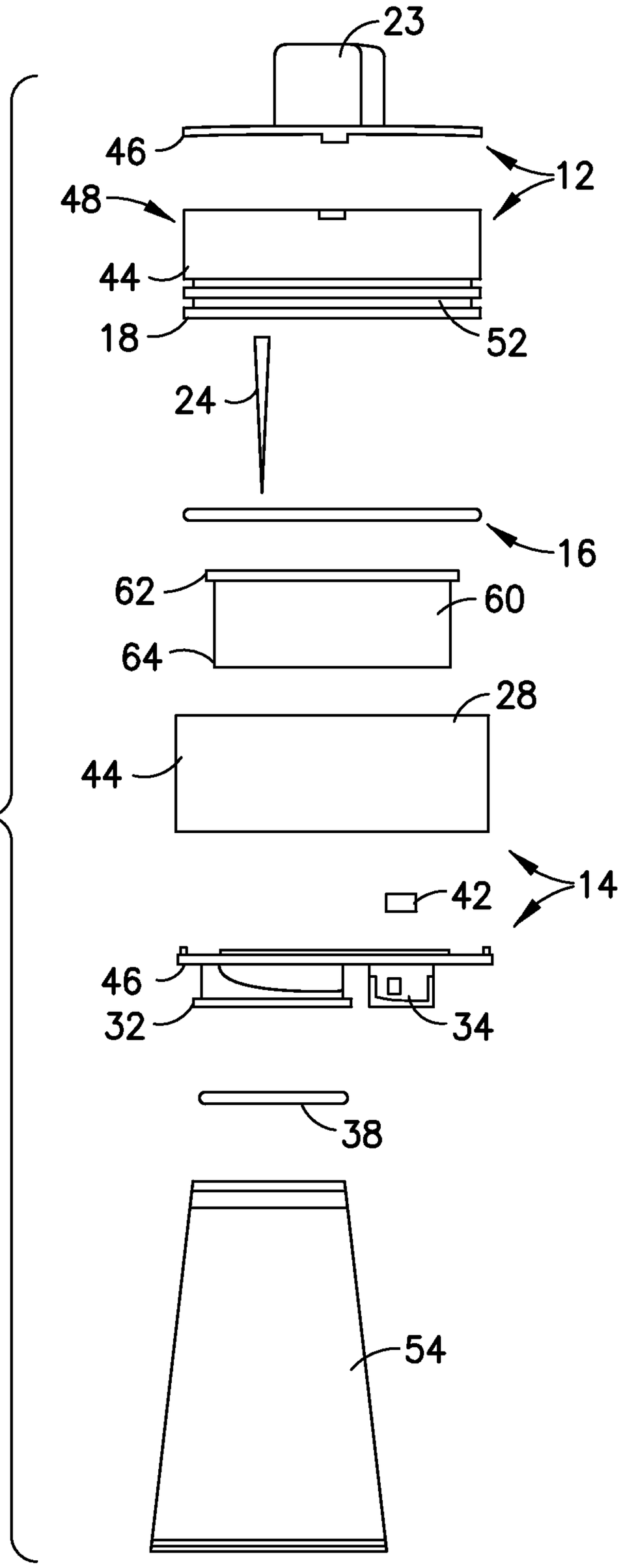

FIG.2

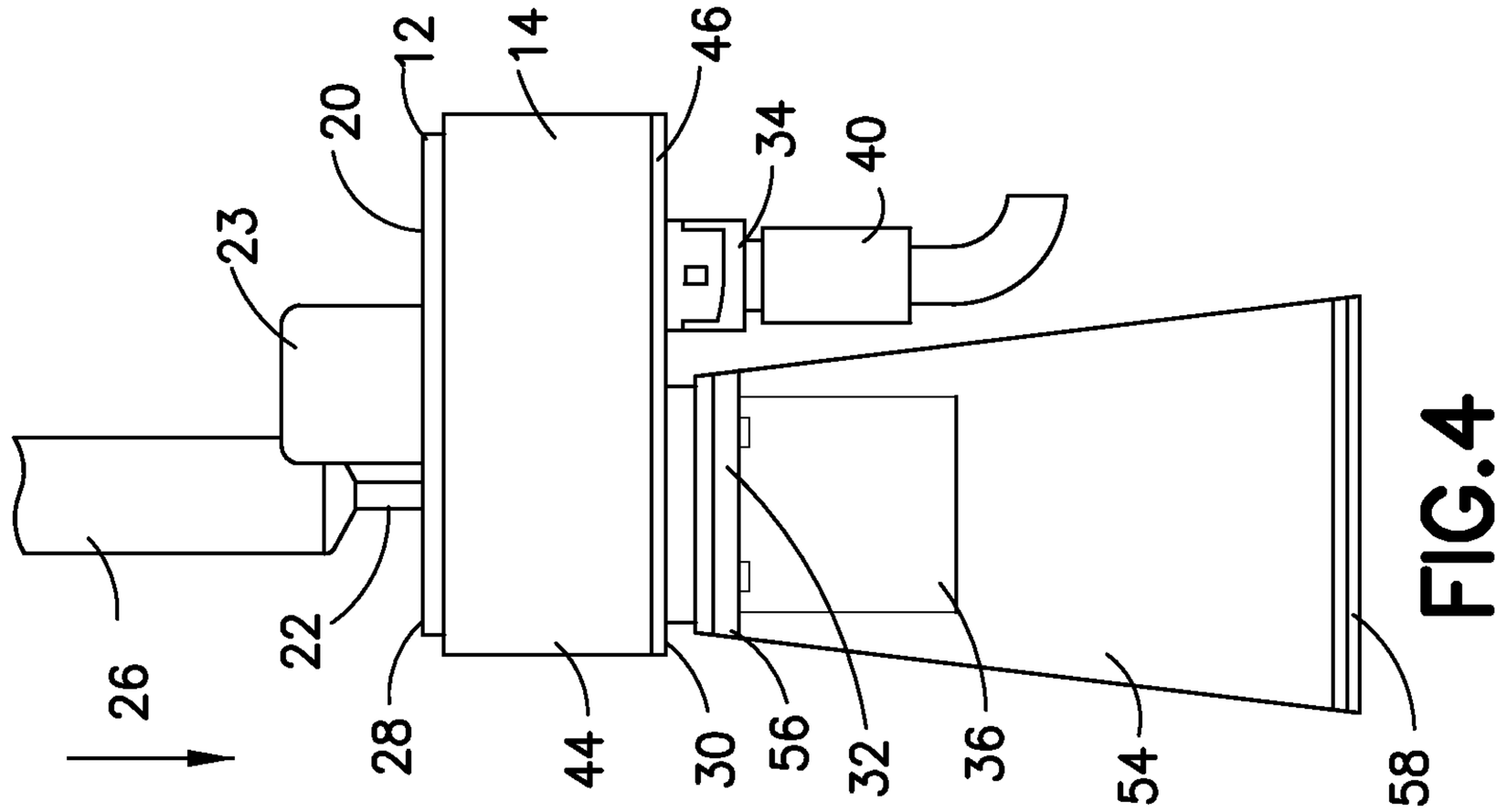
20
12
14
46
23
34
40
26
22
28
44
30
56
32
36
54
58

FIG.4

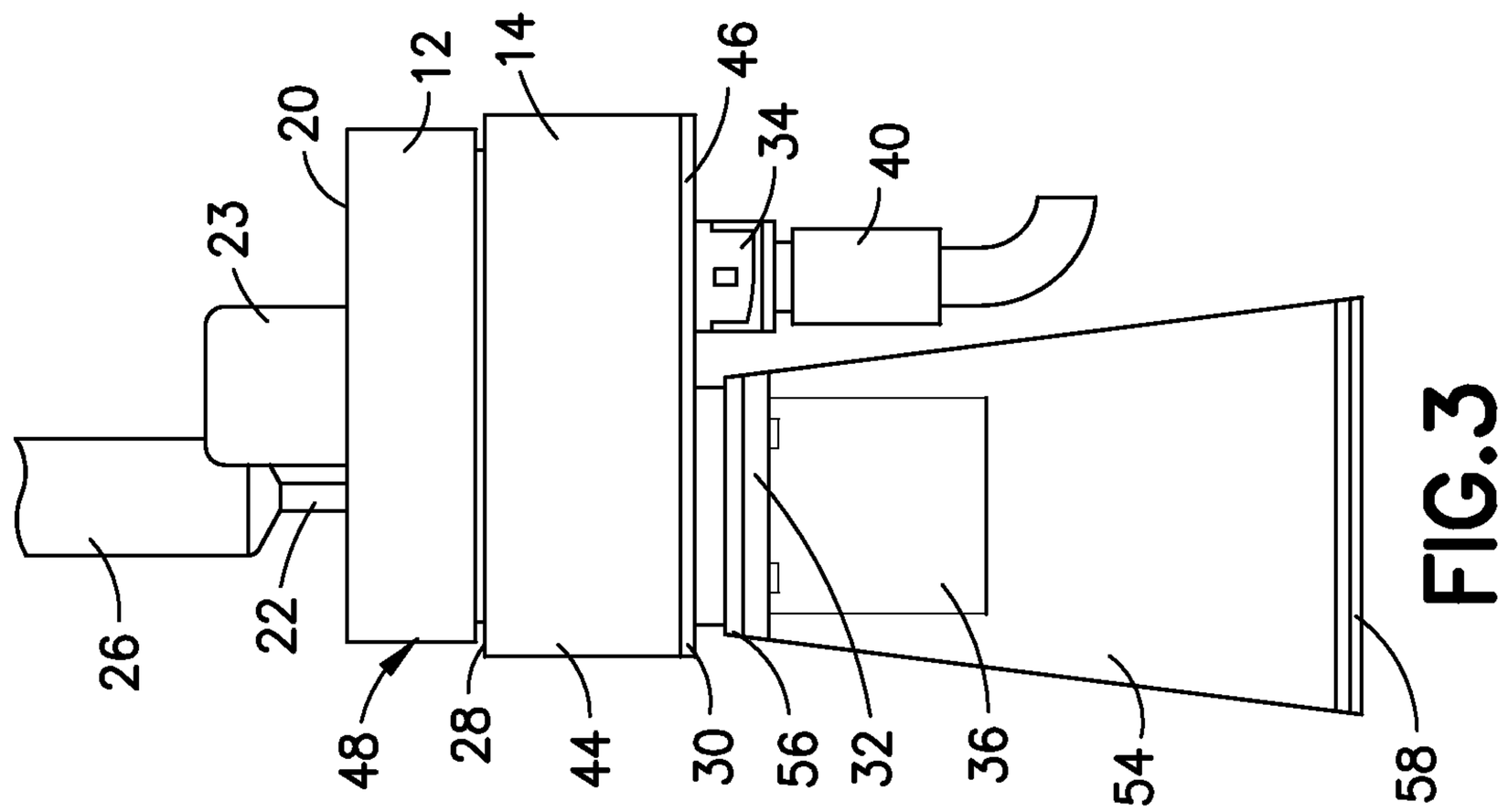
12
14
46
20
34
40
23
26
22
48
28
44
30
56
32
36
54
58

FIG.3

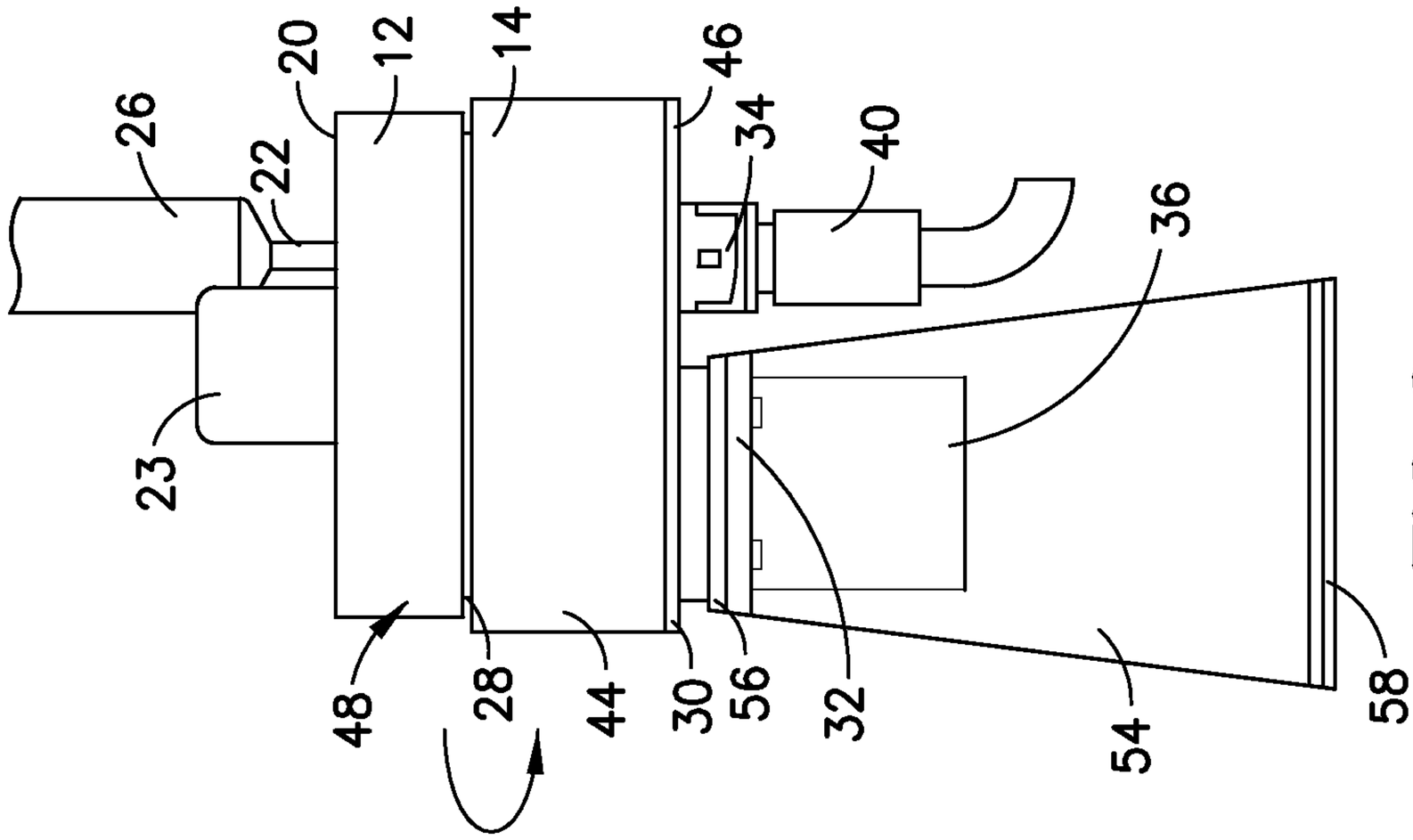
26
22
20
12
14
46
34
40
36
23
48
28
44
30
56
32
54
58

FIG.6

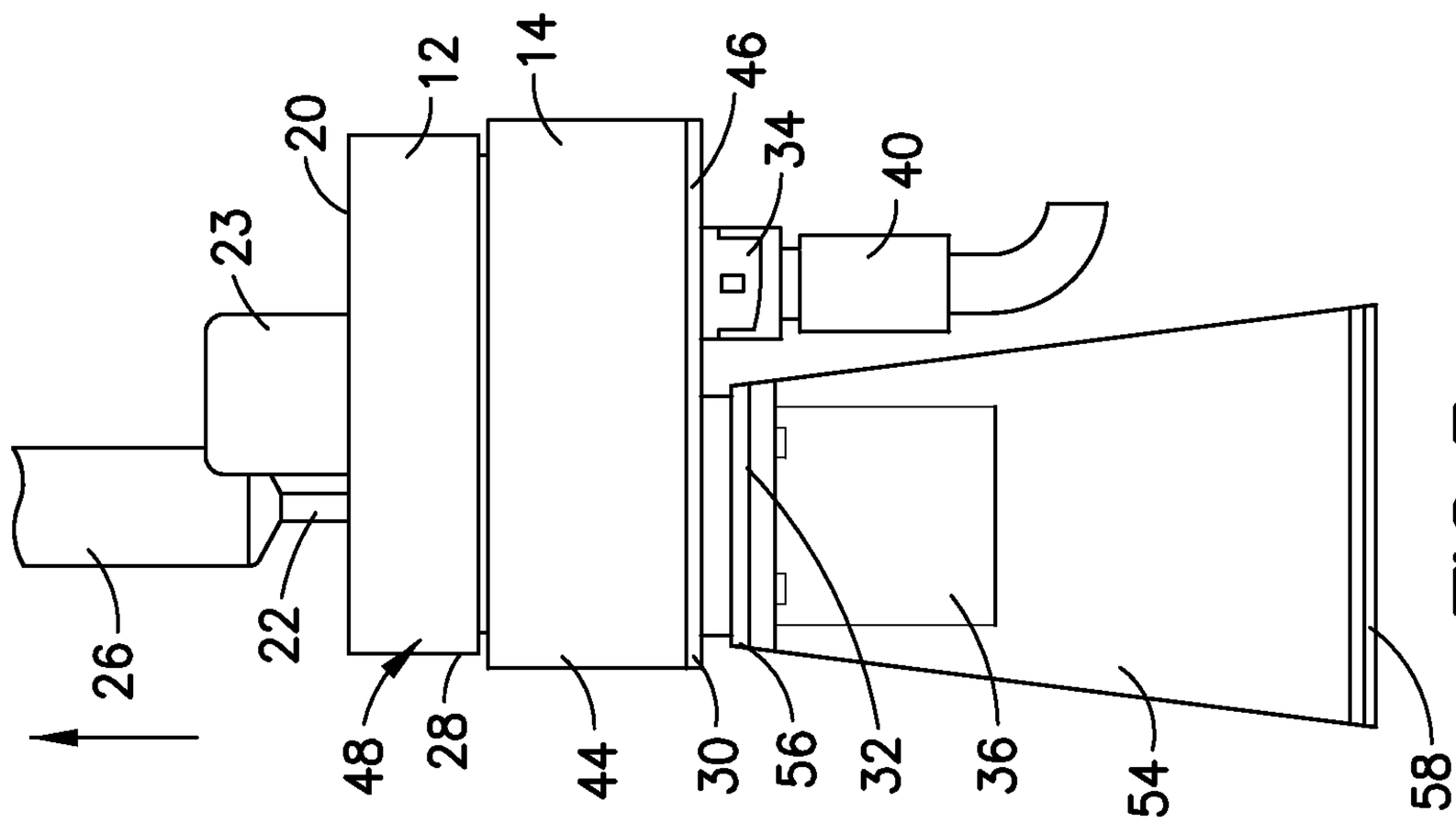
23
20
12
14
46
34
40
26
22
48
28
44
30
56
32
36
54
58

FIG.5

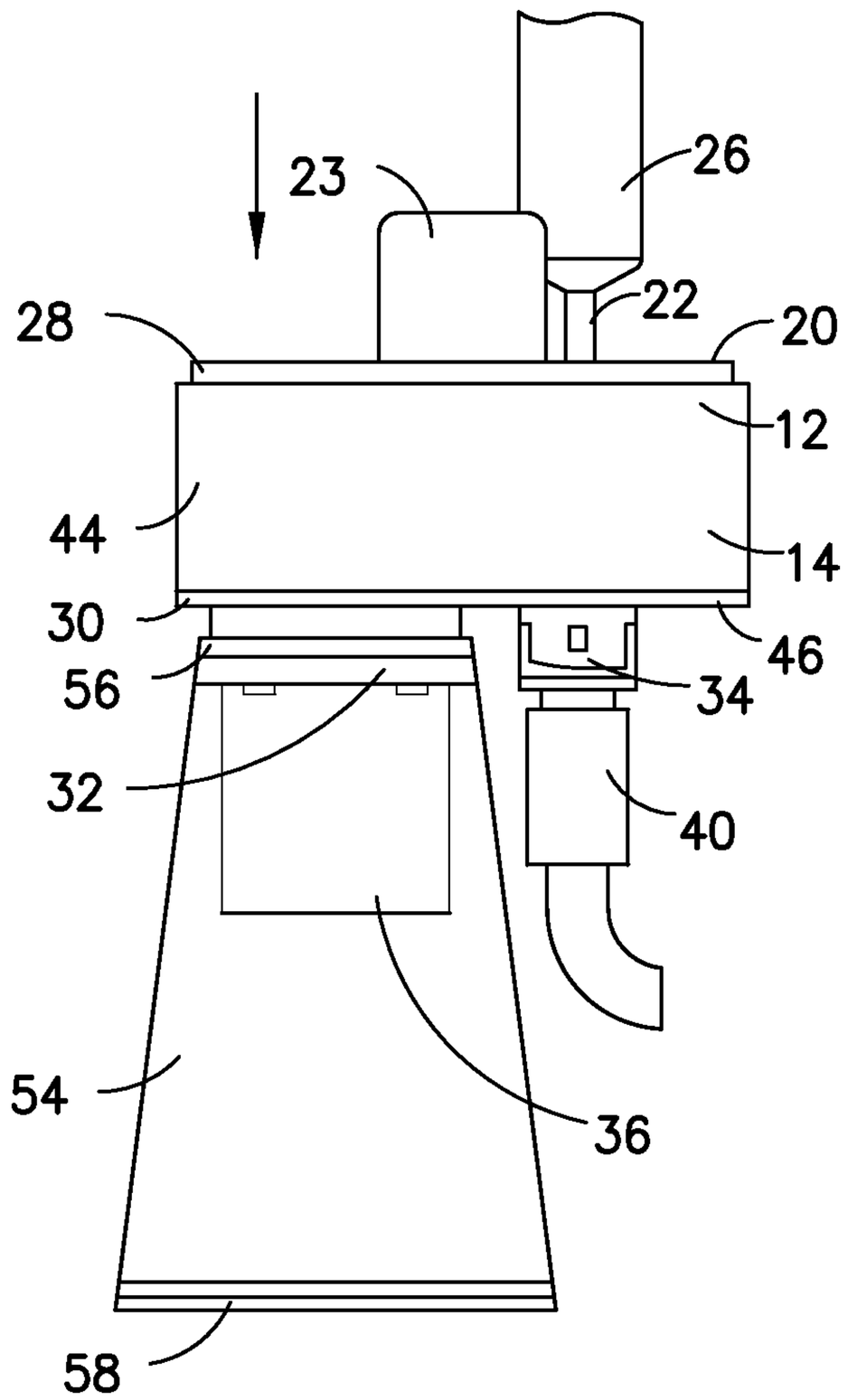

FIG.7

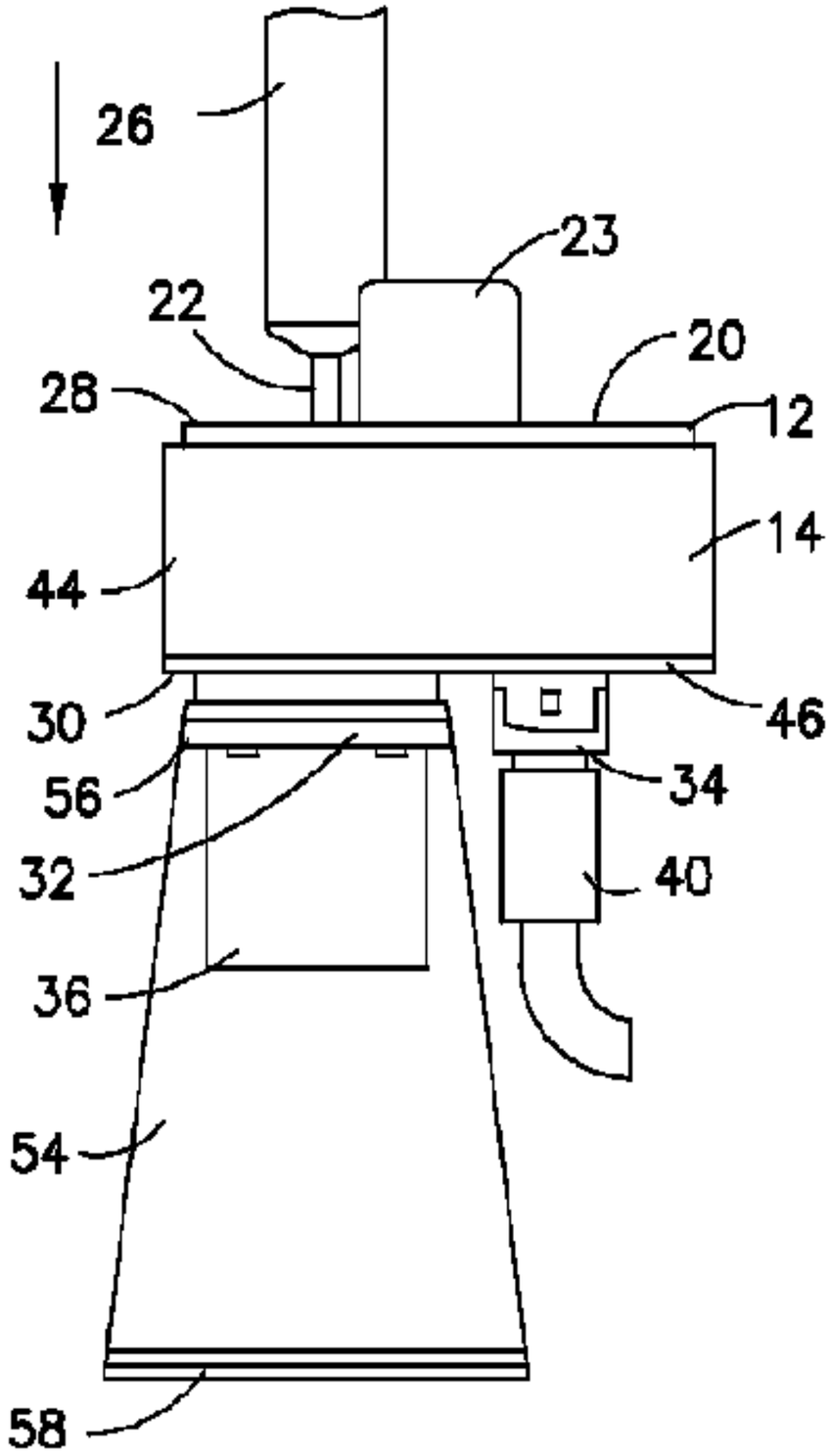
26
23
22
20
28
12
14
44
30
46
56
34
32
40
36
54
58

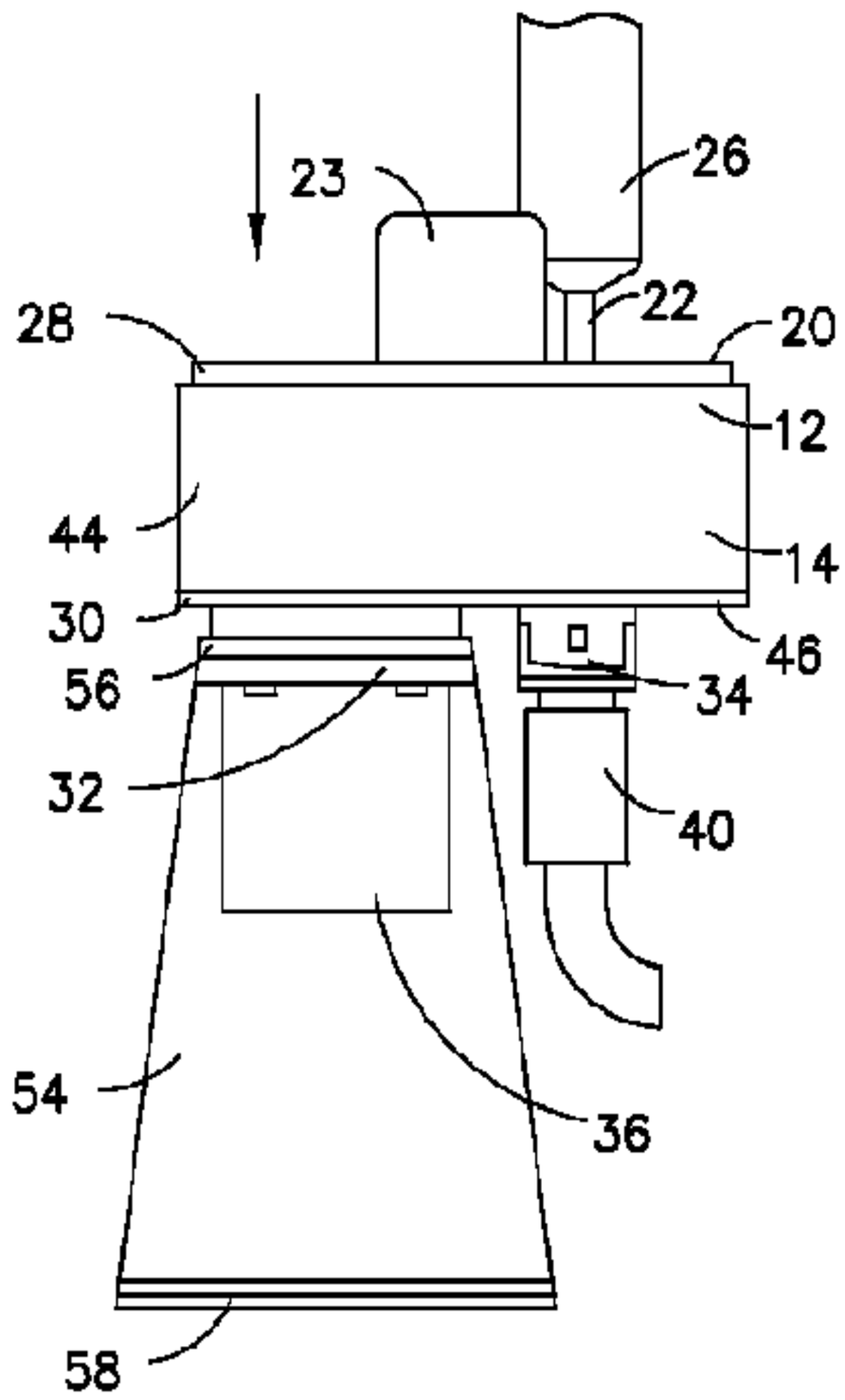
23
26
22
20
28
12
44
14
30
46
56
34
32
40
54
36
58